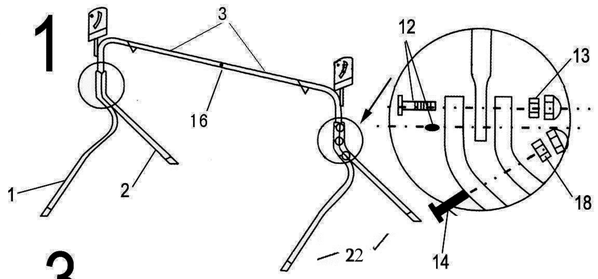

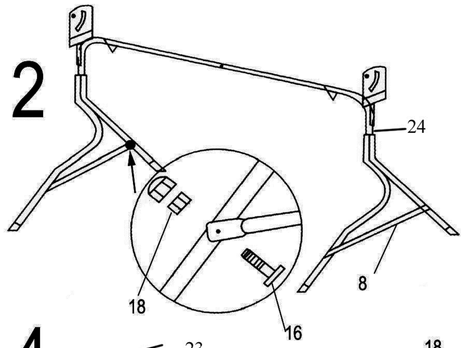

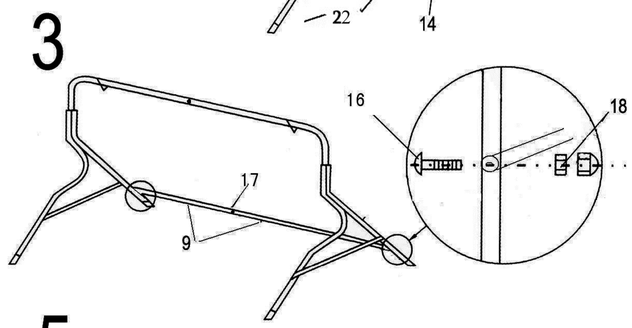

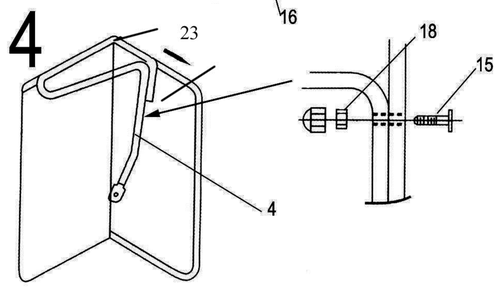

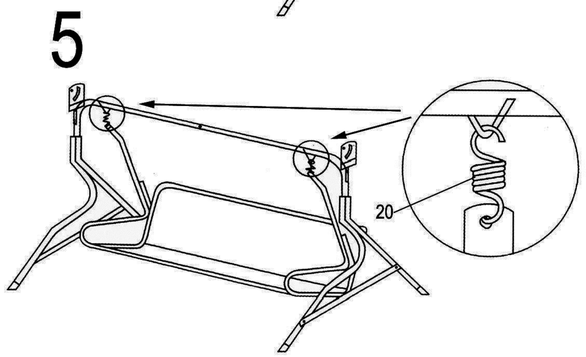

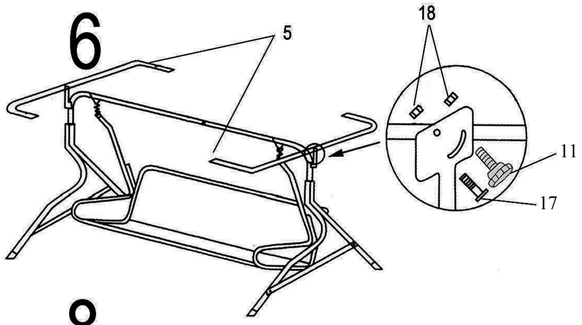

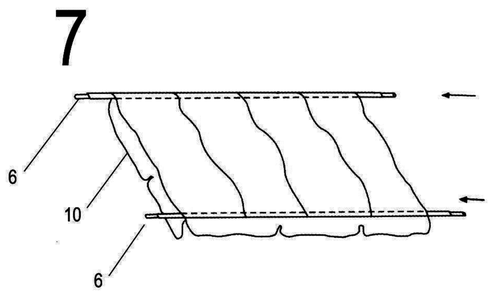

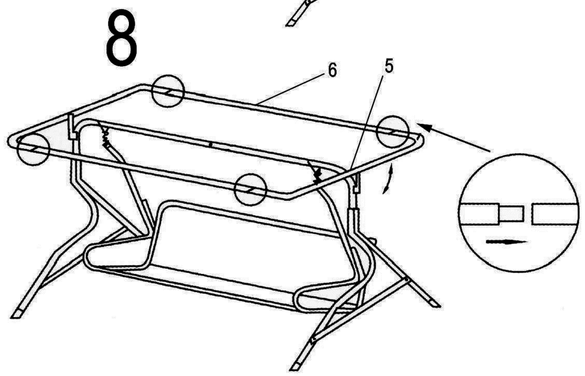
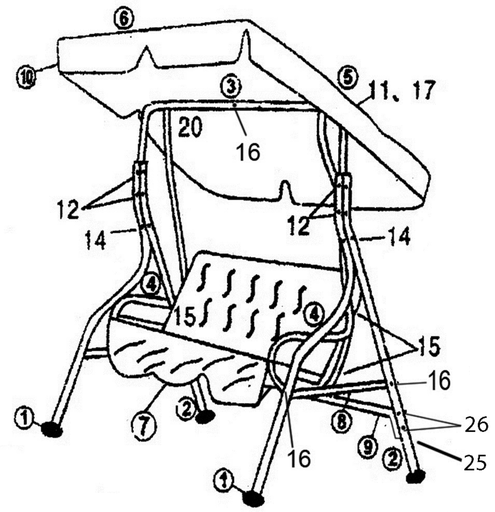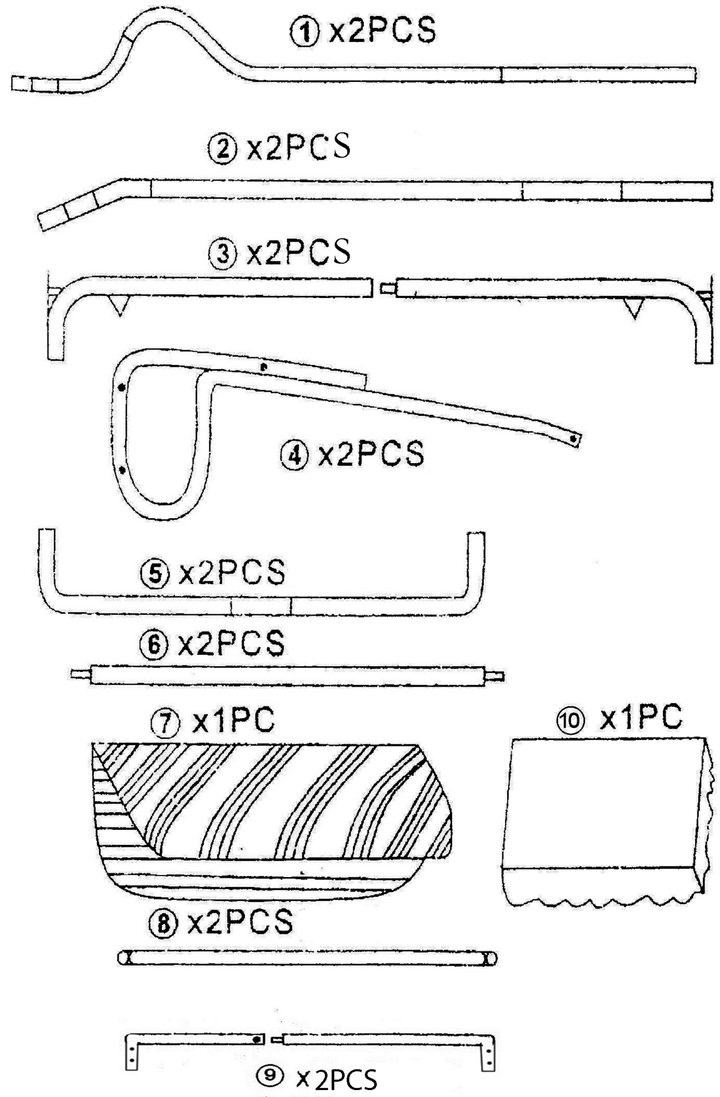
NO.	DESCRIPTION		QUANTITY
11		M6x30	2PCS
12		M8x85	4PCS
13		M8	4PCS
14		M6X80	2PCS
15		M6x55	6PCS
16		M6x45	5PCS
17		M6x25	3PCS
18		M6	22PCS
19			1PC
20			2PCS
21			1PC
CAP		M6	22PCS
		M8	4PCS
22		Φ 38	4PCS
23		Φ 25	6PCS
24		Φ 38	4PCS
25		Φ 19	2PCS
26		M6x 65	4PCS