ALUMINUM MEDICINE CABINET

PRODUCT SERIES INFORMATION

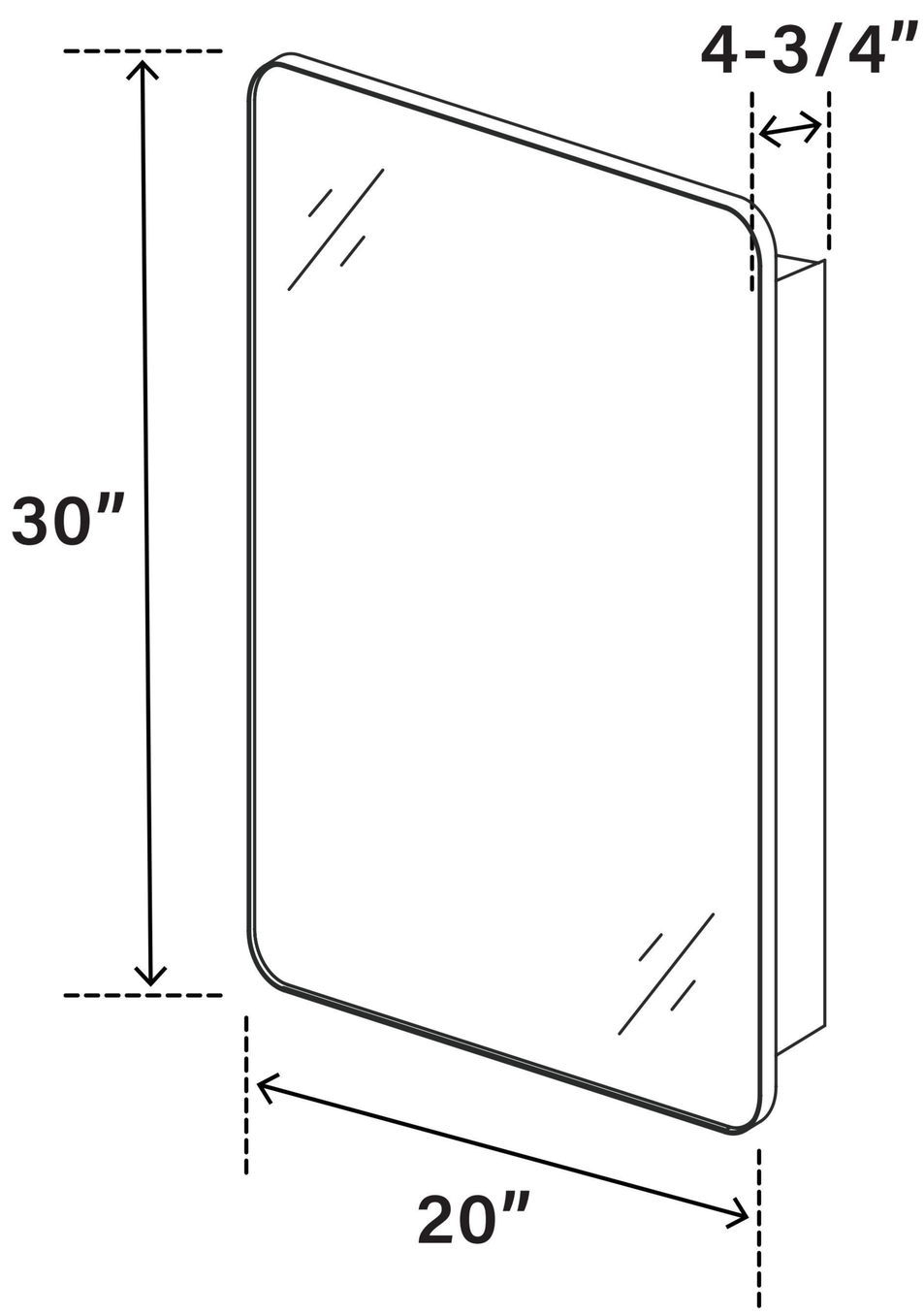

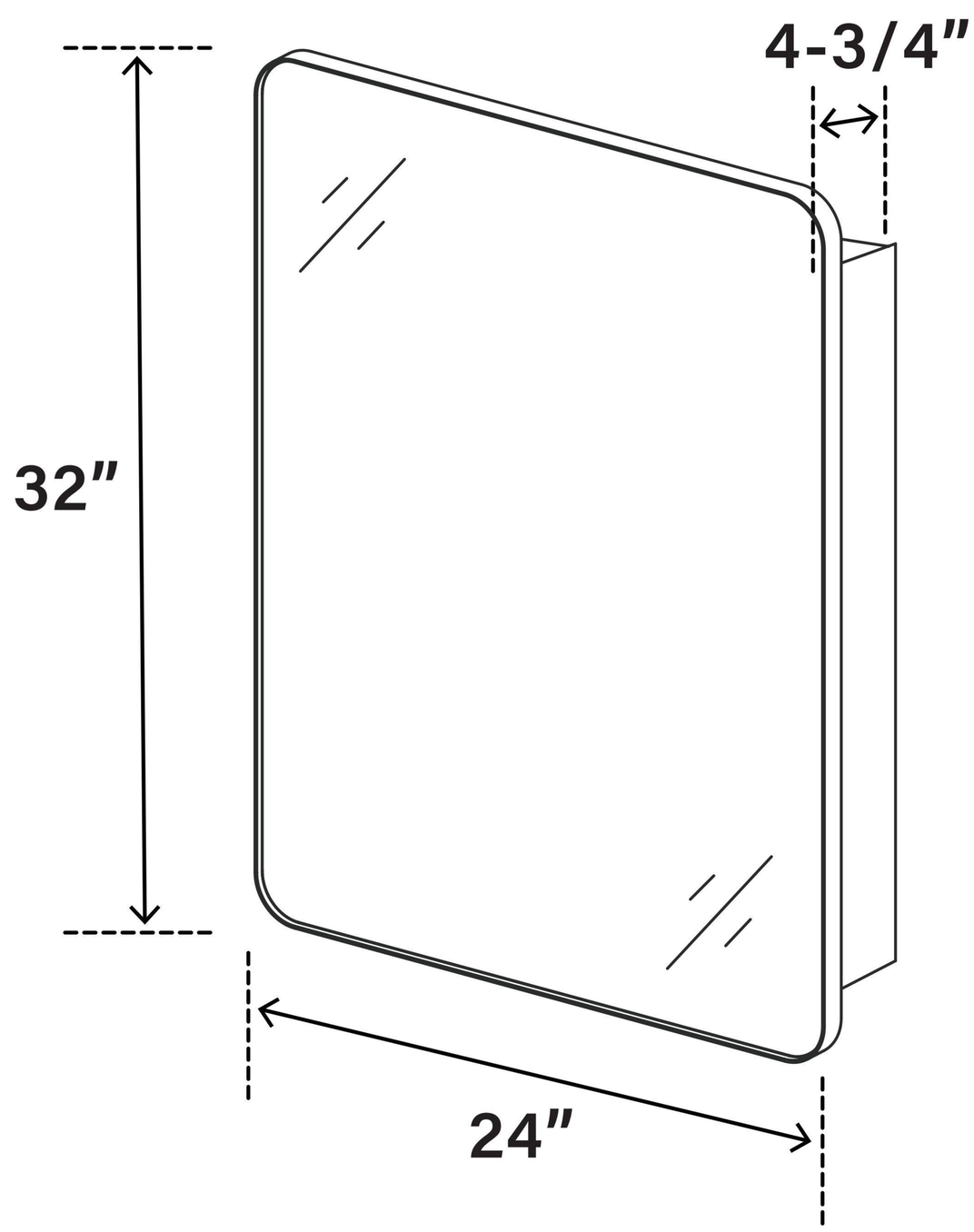

***WARNING:** Do not remove corner proctors & paper cusions, please remove after installation. Please retain the cabinet accessories during the installation process for future needs, for example, screws, nuts, cap and other similar components.Requires three(3) person in installation.

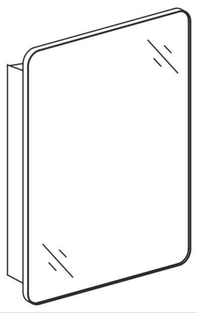

INSTALLATION

ALUMINUM MEDICINE CABINET

TOOLS REQUIRED FOR ASSEMBLY

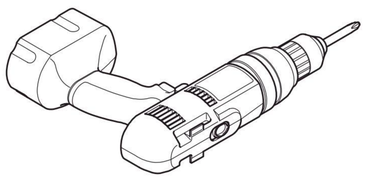

Electrical Drill

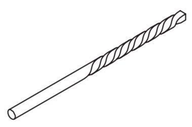

1/8” Drill Bit

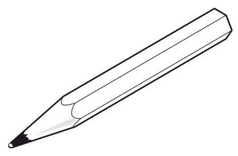

Pencil

Phillips Screwdriver

Tape Measure

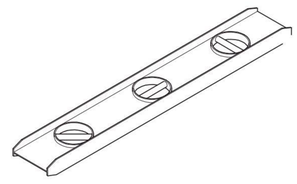

Level

PARTS INCLUDED

SCREW

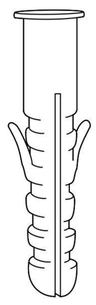

WALL PLUG

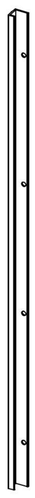

BOTTOM MOUNTING BRACKET

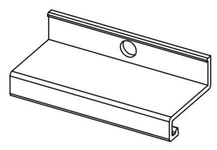

TOP MOUNTING BRACKET

CABINET DOOR BUMPERS

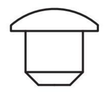

SHELF HOLE PLUG

⚠ **NOTE**: Determine overall mirror dimensions before installation.
Requires three(3) person in installation.

Accessories and parts may vary from the picture above.Depends on the product model and size.

DIMENSIONS

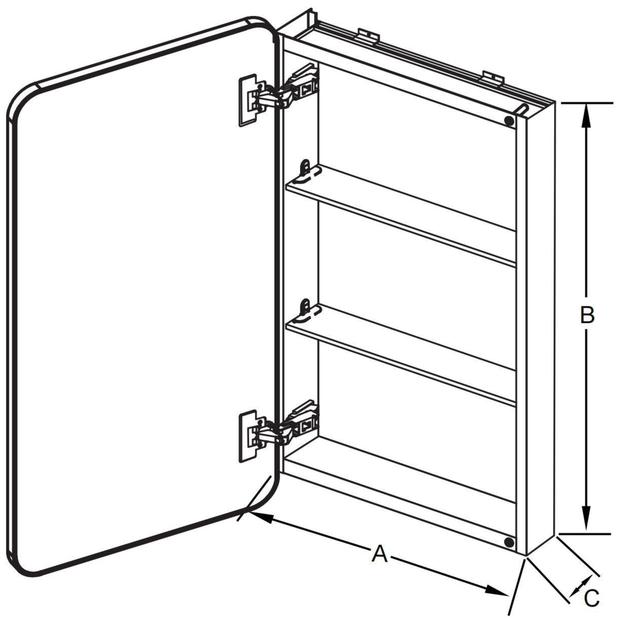

A- Cabinet Width
B- Cabinet Height
C- Cabinet Depth

A	B	C	Rough in size
20"	30"	4-3/4"	19-1/16" *24-1/16" *3-13/16"
24"	32"	4-3/4"	23-1/16" *26 1/16" *3-13/16"

NOTE: All rough-in dimensions for reference only!

NOTE: Please use rough in size for recess mounting installation(wall cut-out).
All dimensions and specifications are nominal and may vary.Use actual products for accuracy in critical situations.

*Style and shape may vary from the picture above. Instructional purpose only *

SURFACE-MOUNTED INSTALLATION

*** No need to take off the door(s) before installing the cabinets.**

1 *Level and mark the cabinet's location on the wall.*

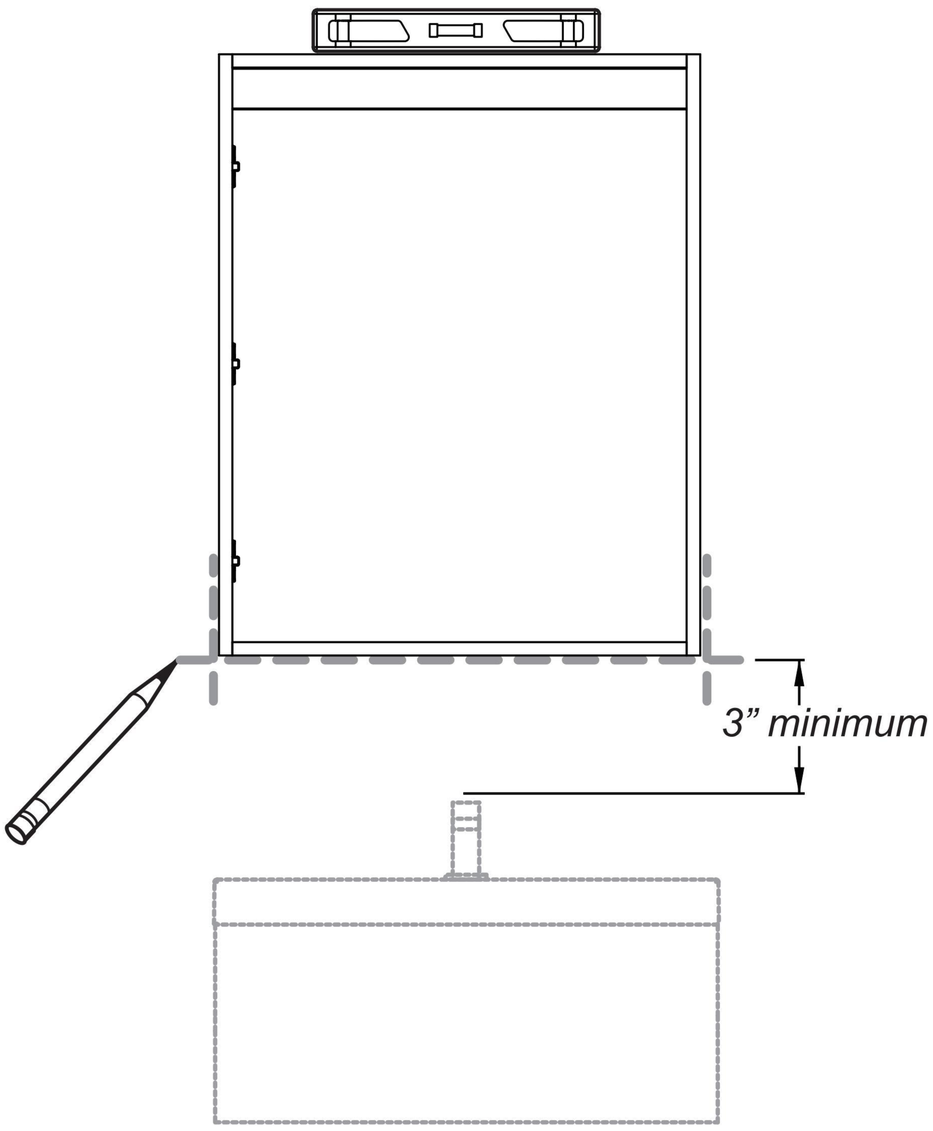

2 *Mark the position of the Bottom Mounting Bracket and Punch.*

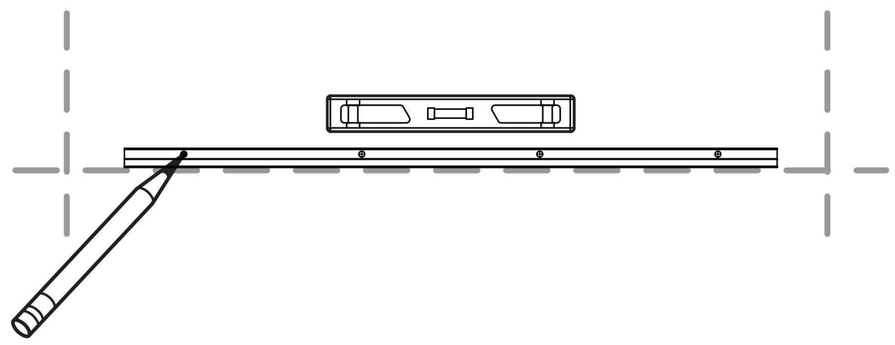

Bottom mounting brackets must be attached to furring strip/channel or wall studs

3 *Punch holes in the mark, put in Wall Plug, fix Bottom Mounting Bracket to the wall with Screw.*

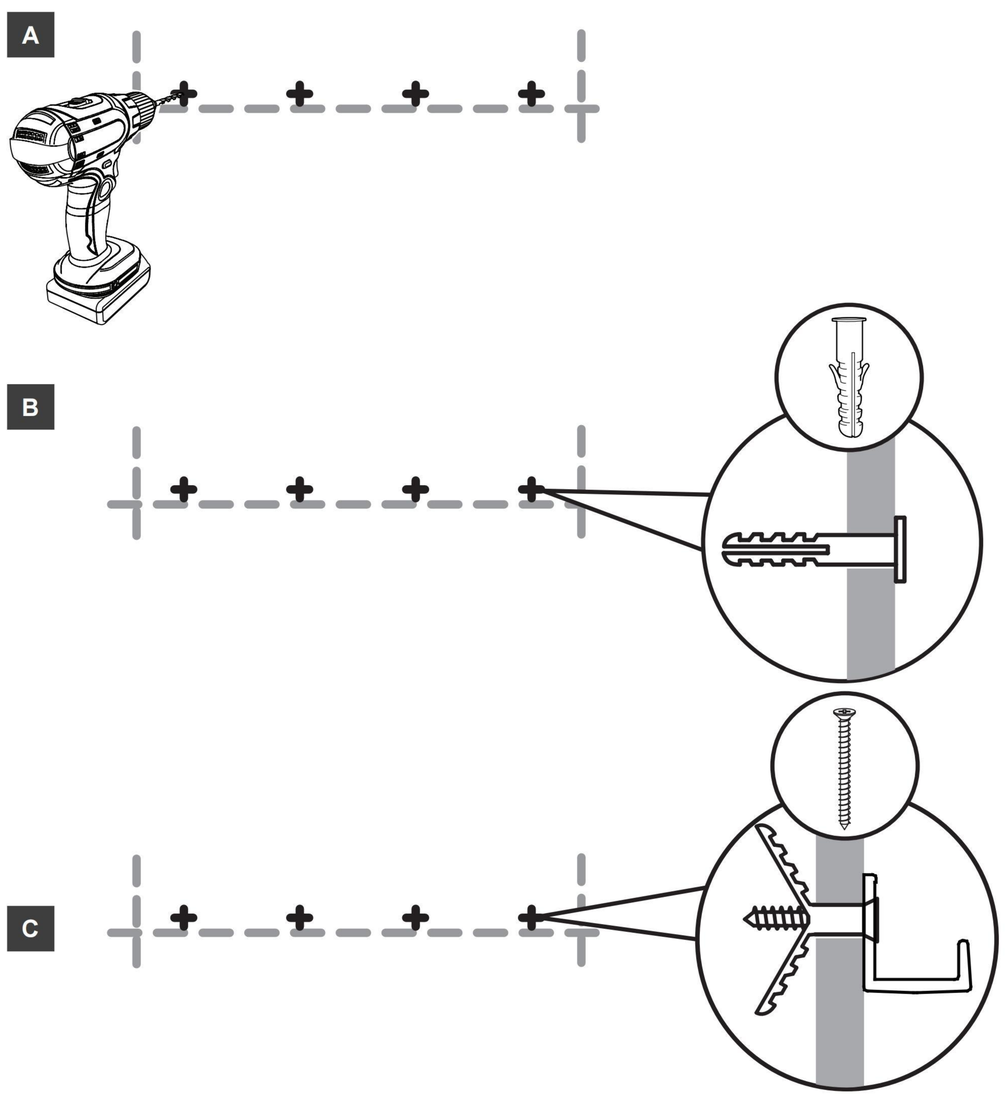

Attach bottom bracket to wall.

4 *With assistance, to rest the cabinet on the mounting bracket and hold in place.*

Make sure cabinet is leveled and fully inserted into the groove of the bottom bracket.

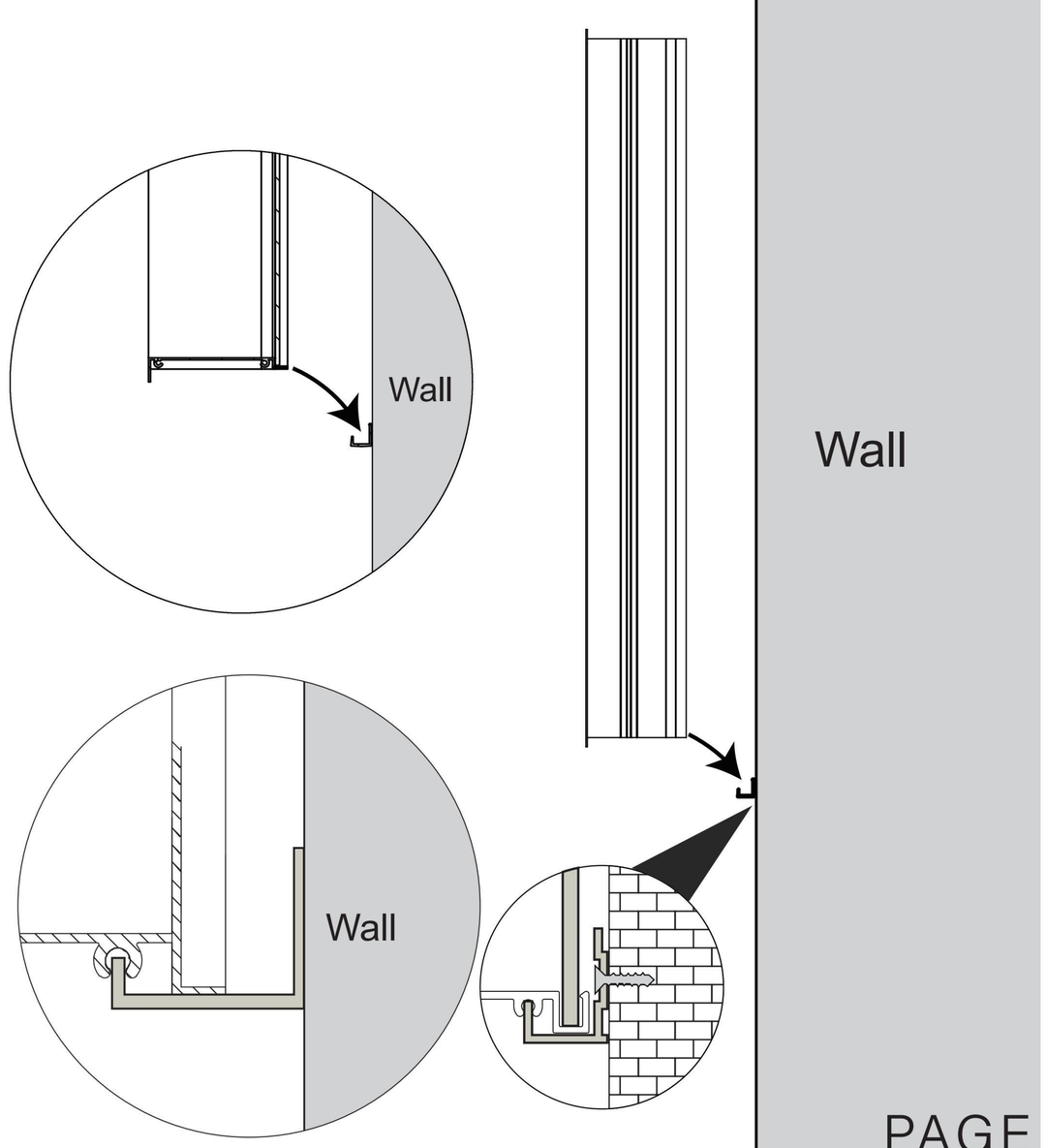

SURFACE-MOUNTED INSTALLATION

5 *Insert top mounting bracket into the top of the cabinet.*

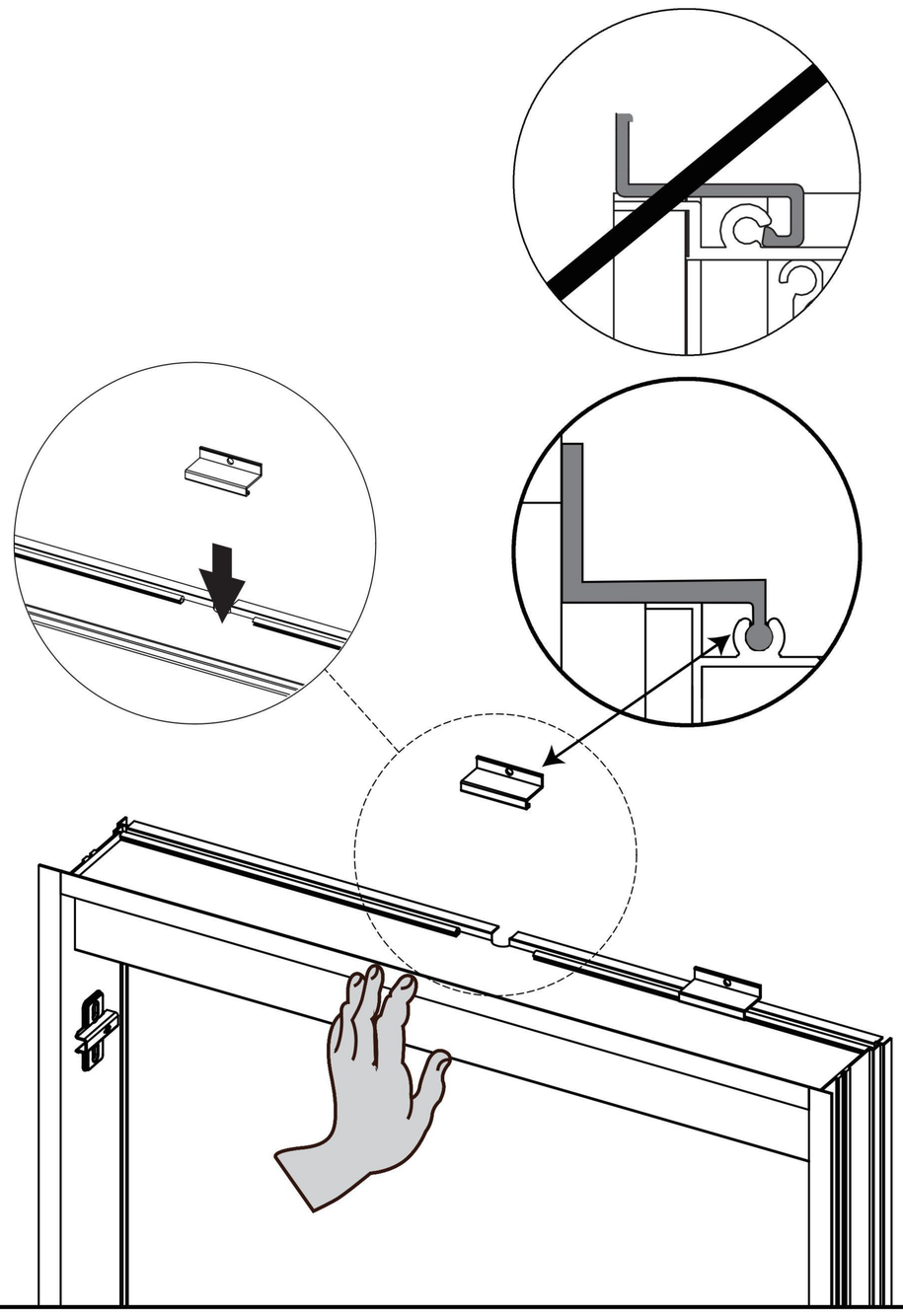

6 *Make sure top brackets are locked in the grooves.*

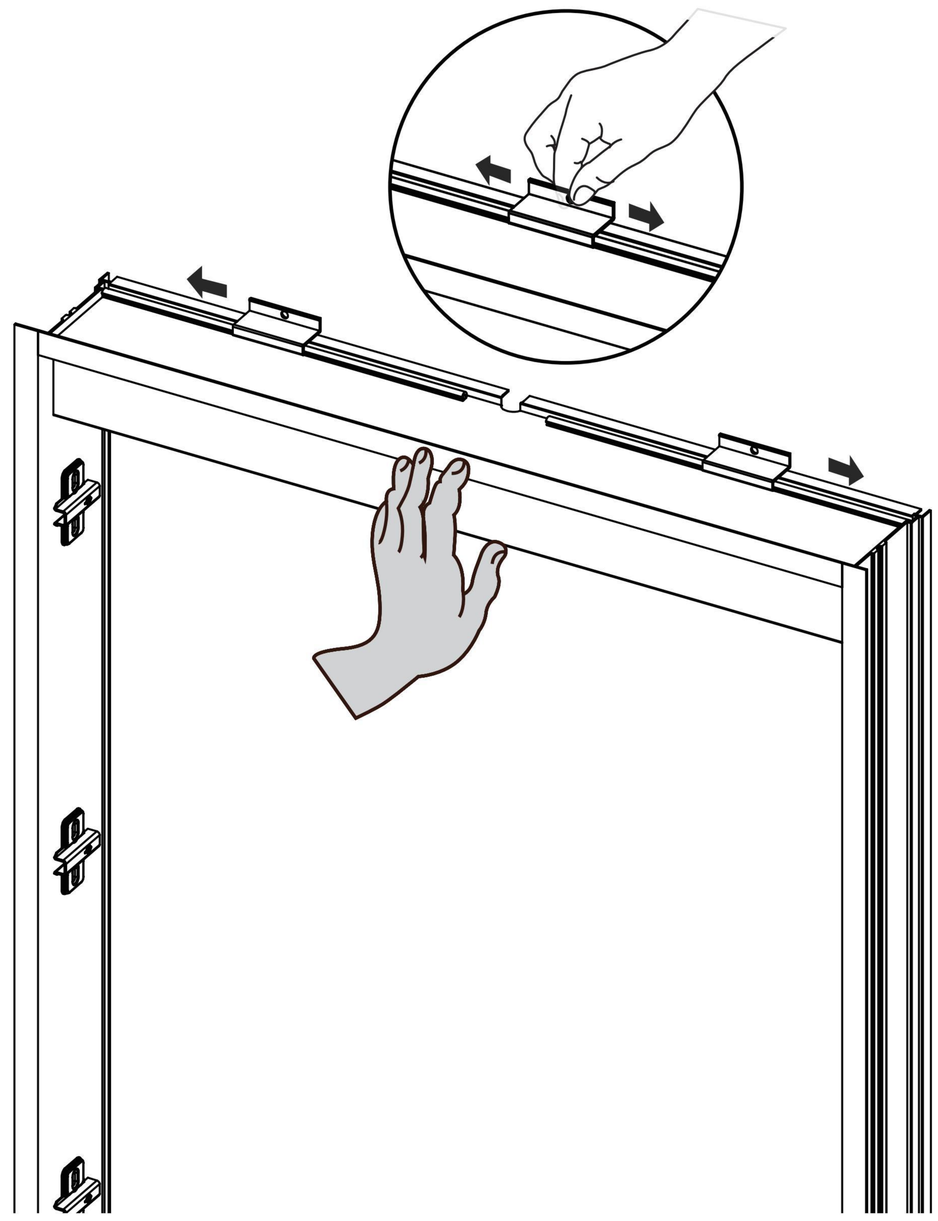

7 *Adjust the position of Top Mounting Bracket and mark the holes with a pencil*

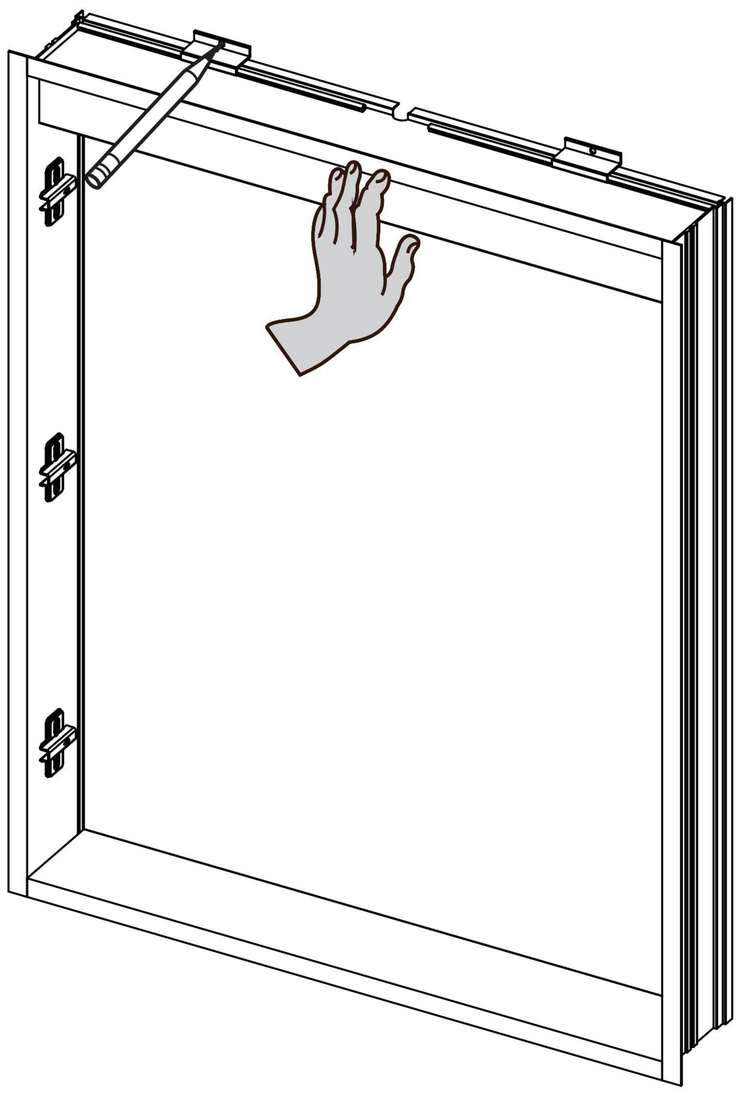

8 *Remove the cabinet, drill holes according to the marked position, and put in Wall Plugs.*

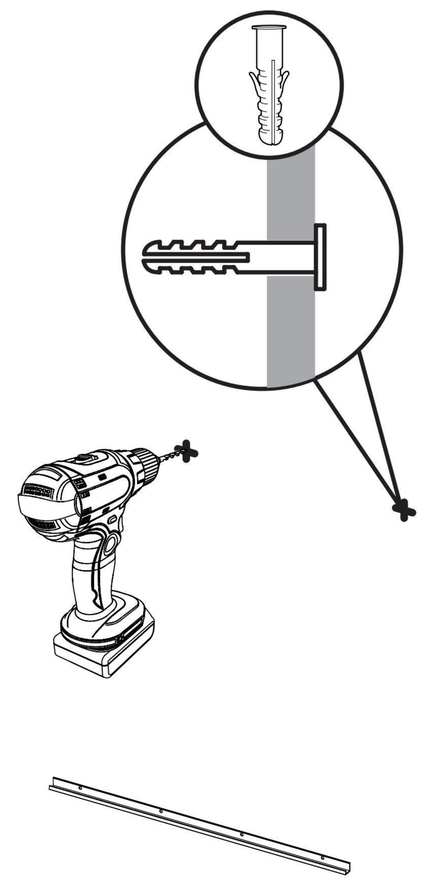

Put the cabinet down first, then drill the top bracket holes, electric drill bit vibrations will damage the cabinet top surface.

SURFACE-MOUNTED INSTALLATION

9 *Put the cabinet on the bottom mounting bracket and hold the place, then insert the top mounting bracket into the top of cabinet, fix the top mounting brackets to the holes with screw.(repeat step 4-6)*

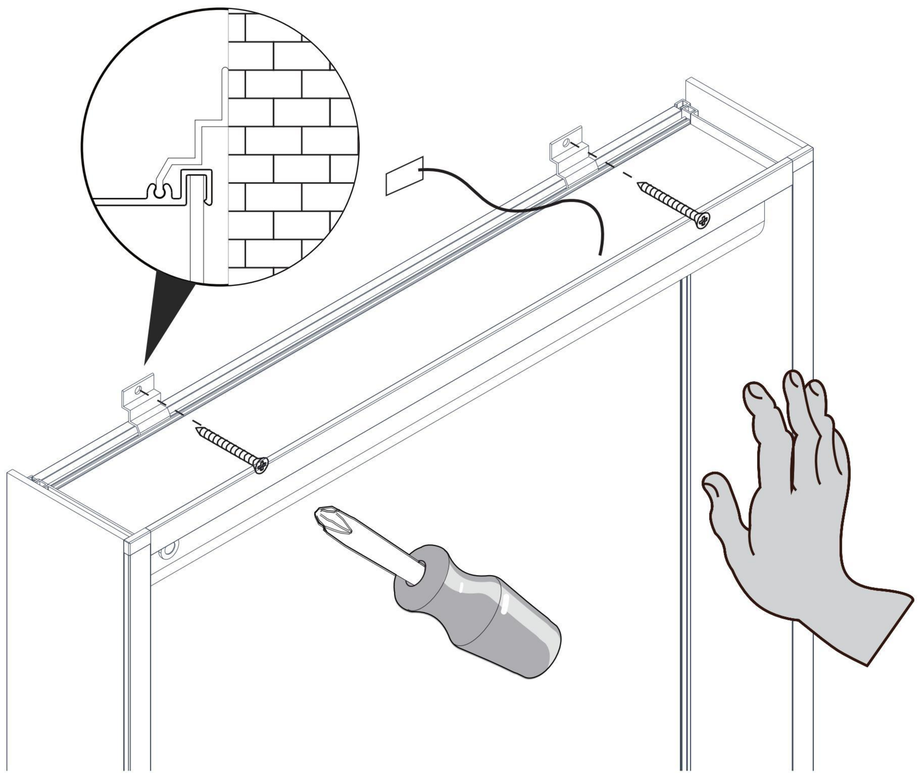

NOTE: *Vibrations occur in the electric drill, use Philips Screwdriver to protect your cabinet top surface.*

Top mounting brackets must attached to furring strip/channel or wall studs.

10 *Test the fit of the cabinet before Final assembly.*

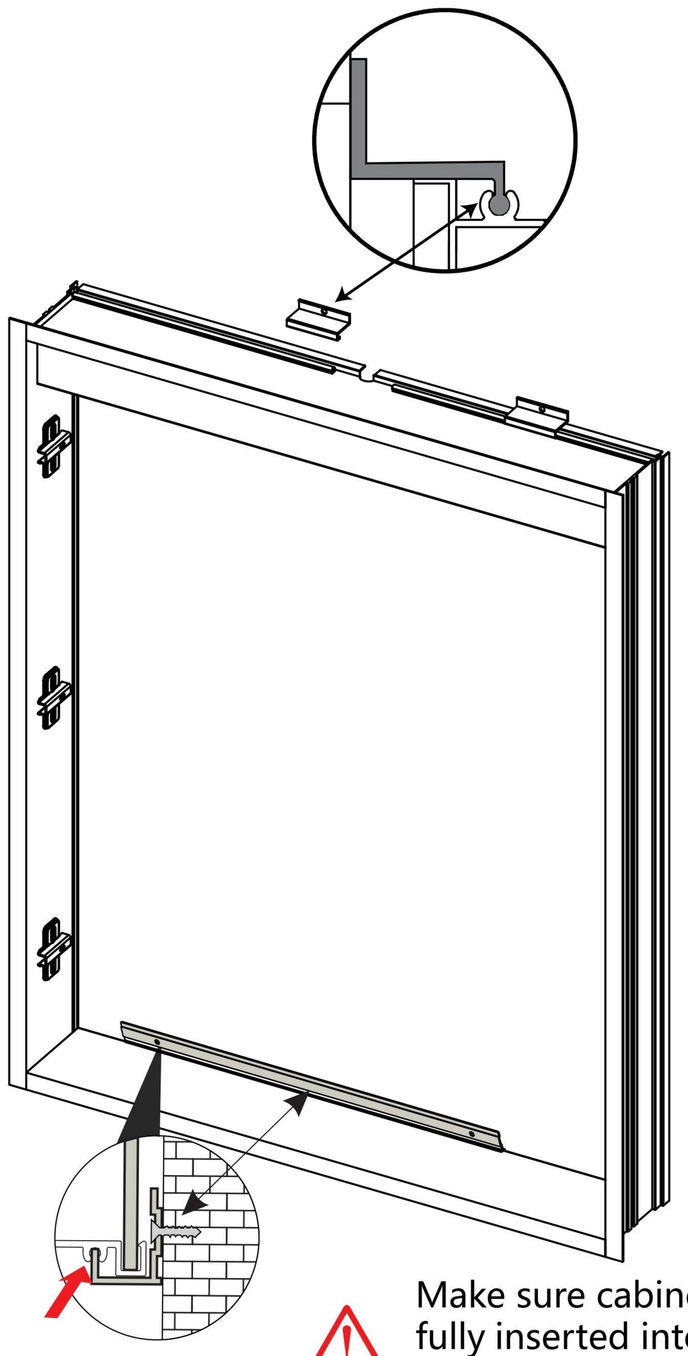

Make sure cabinet is leveled and fully inserted into the groove of the bracket.

11 *If needed ,please turn over the upside to downside ,you may get the opposite hand installations .*

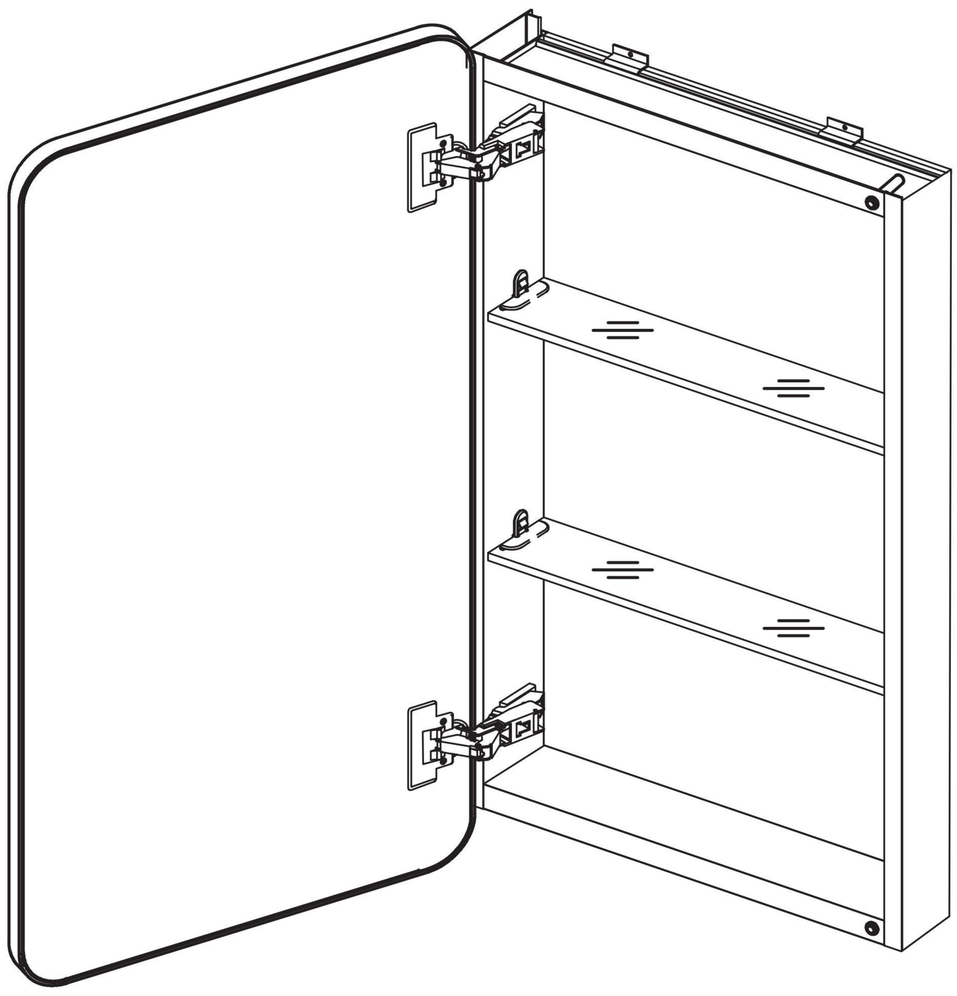

Left hand Installation

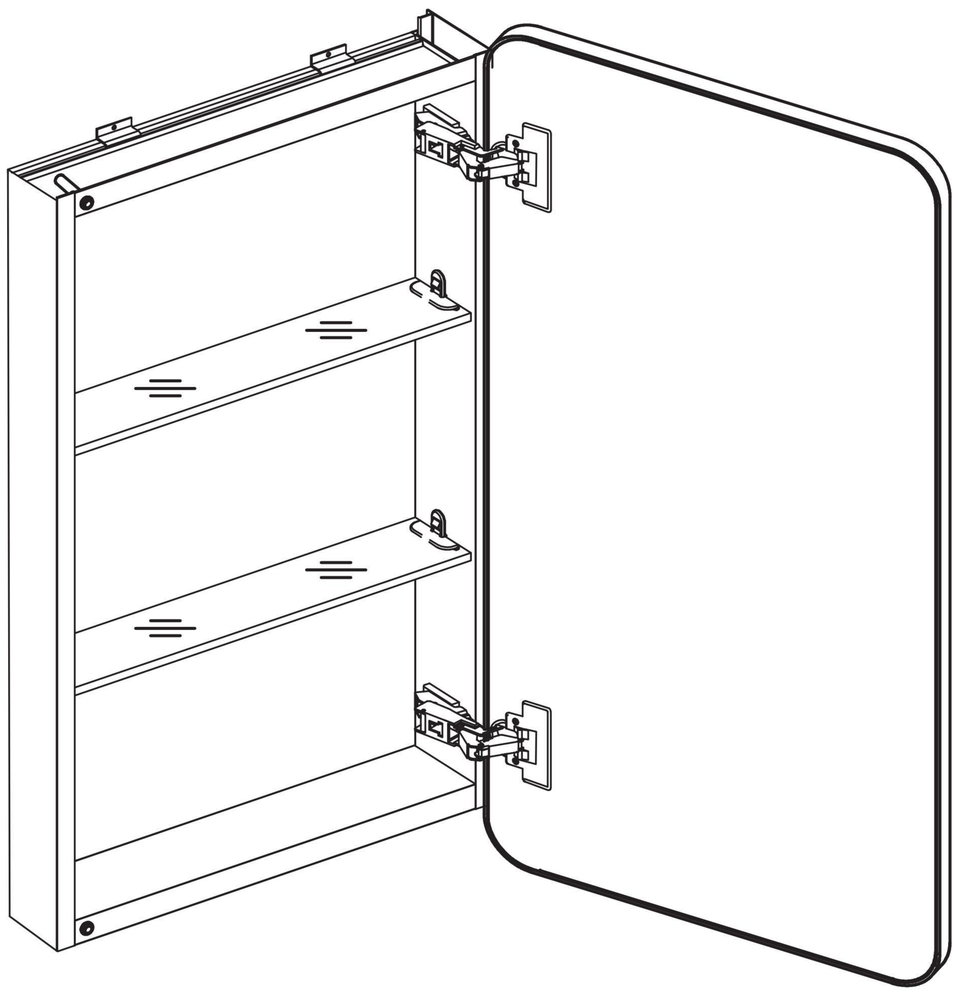

Right hand Installation

RECESS INSTALLATION

∗ No need to take off the door(s) before installing the cabinets.

1 *Detach side panel from the cabinet for recessed installation. These items are located on both sides of the miror cabinet body.*

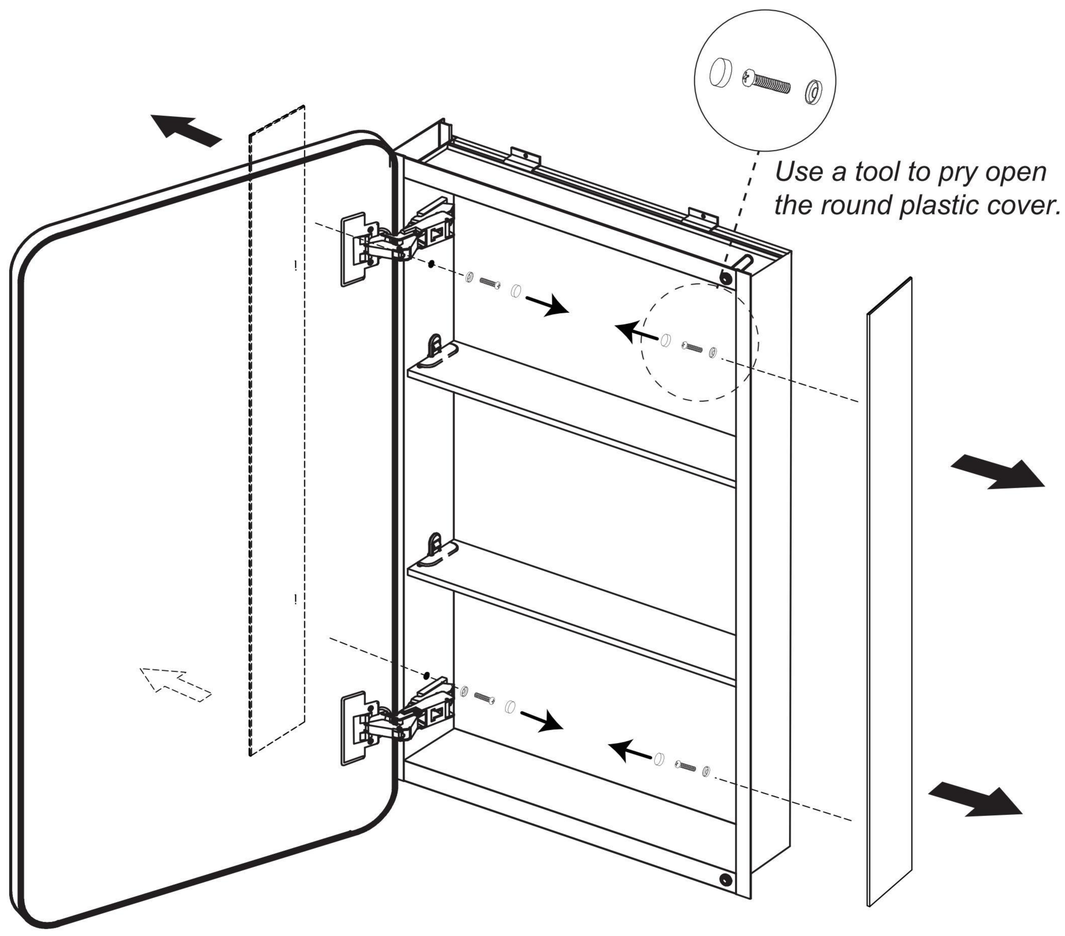

⚠ For recess mount only!

2 *Refer to "dimensions" on page 4 to measure Rough in size.*

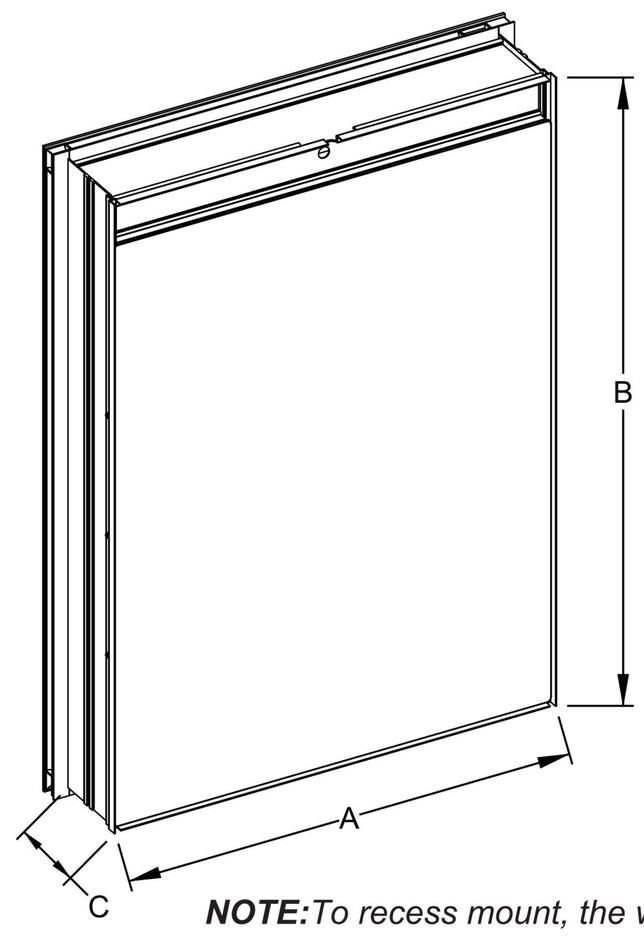

NOTE:*To recess mount, the wall cavity must be framed and the cabinet secured to framing studs. Reroute electrical or water supply lines from the cavity. Consult a professional if drain or vent piping is encountered, or if the wall is load-bearing.*

3 *Draw the perimeter of the cabinet on the wall.*

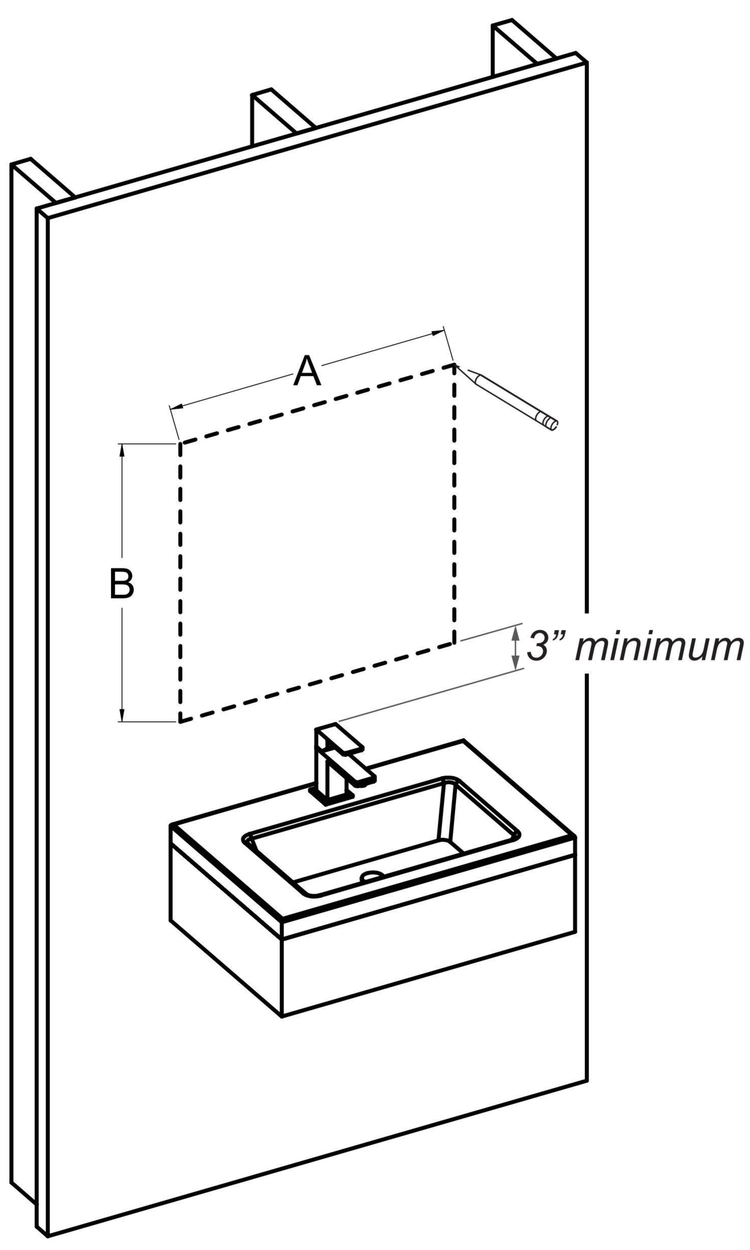

4 *Cut the hole as marked dimension with suitable tool.*

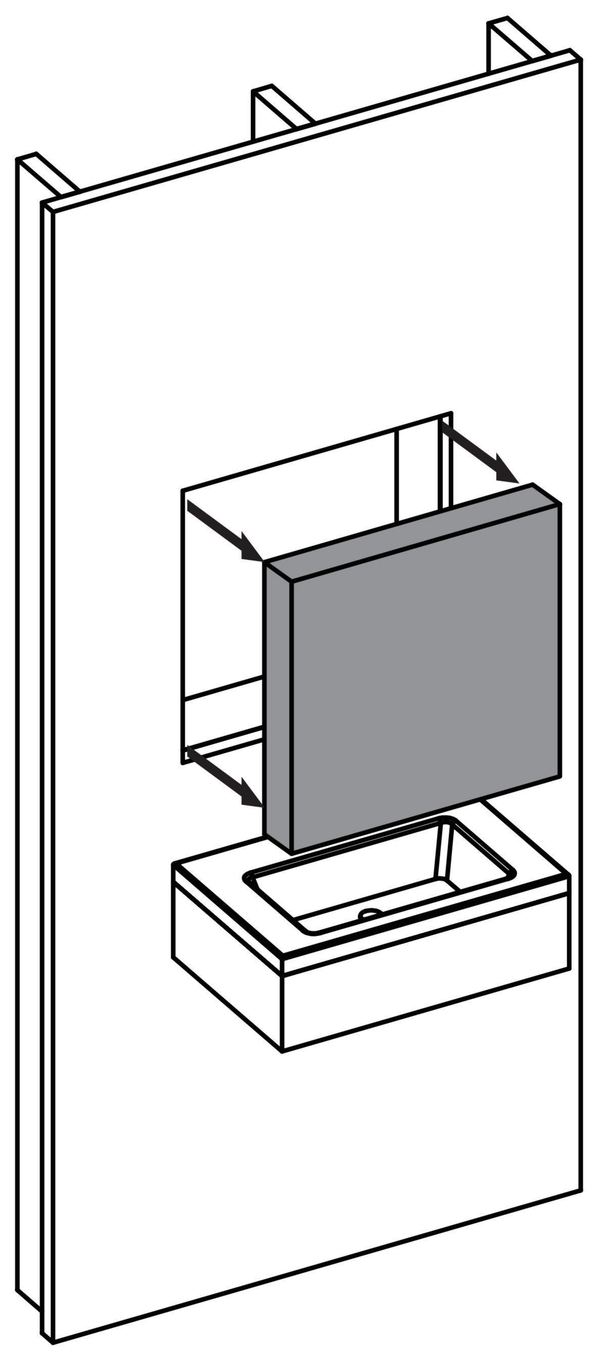

RECESS INSTALLATION

5 *Frame the opening for the cabinet based on the measurements.*

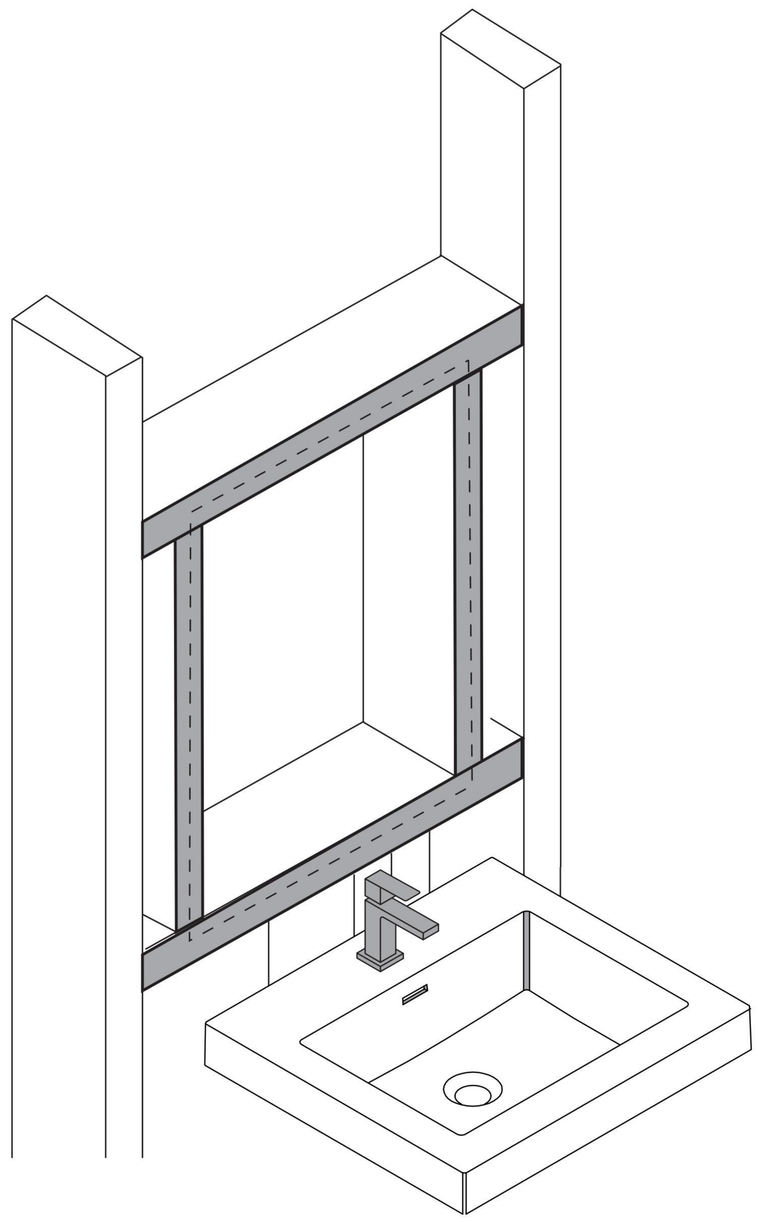

6 *Place the medicine cabinet between the wall studs.*

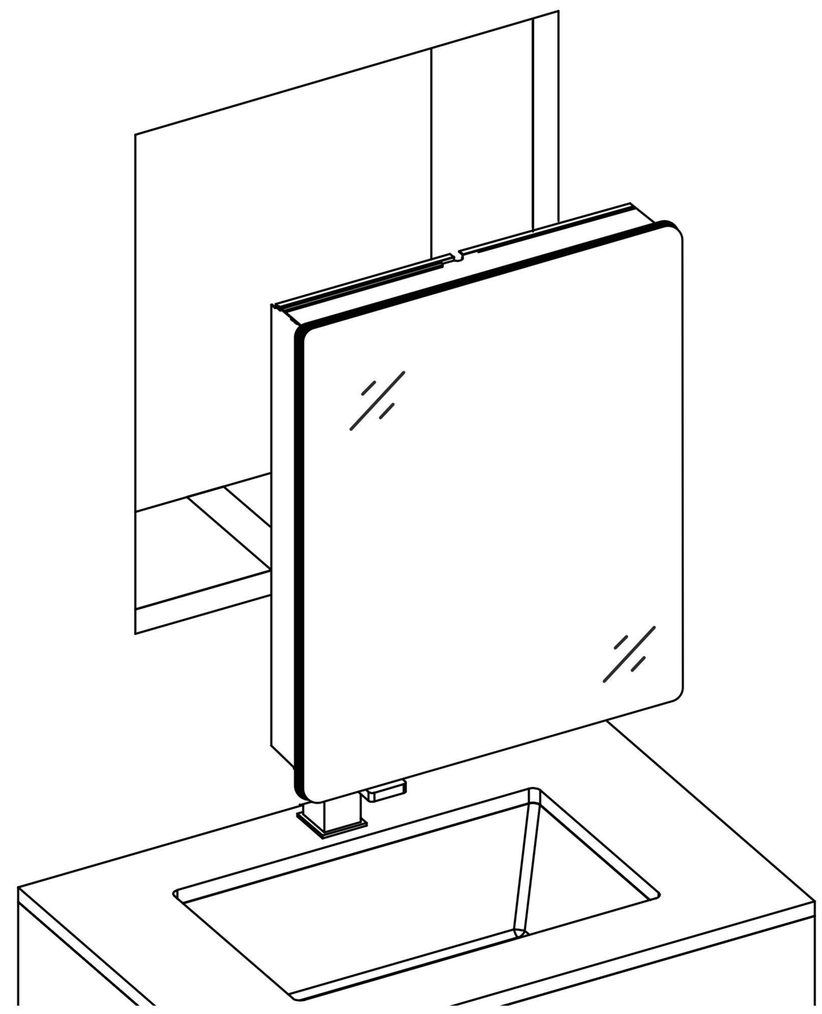

7 *Affix using hardware screws into the studs.*

NOTE:*For wood stud wall,you need to use screw to fix the cabinet. For brick/concrete/stone/tile wall, you need to use wall plug and screw together to fix the cabinet.*

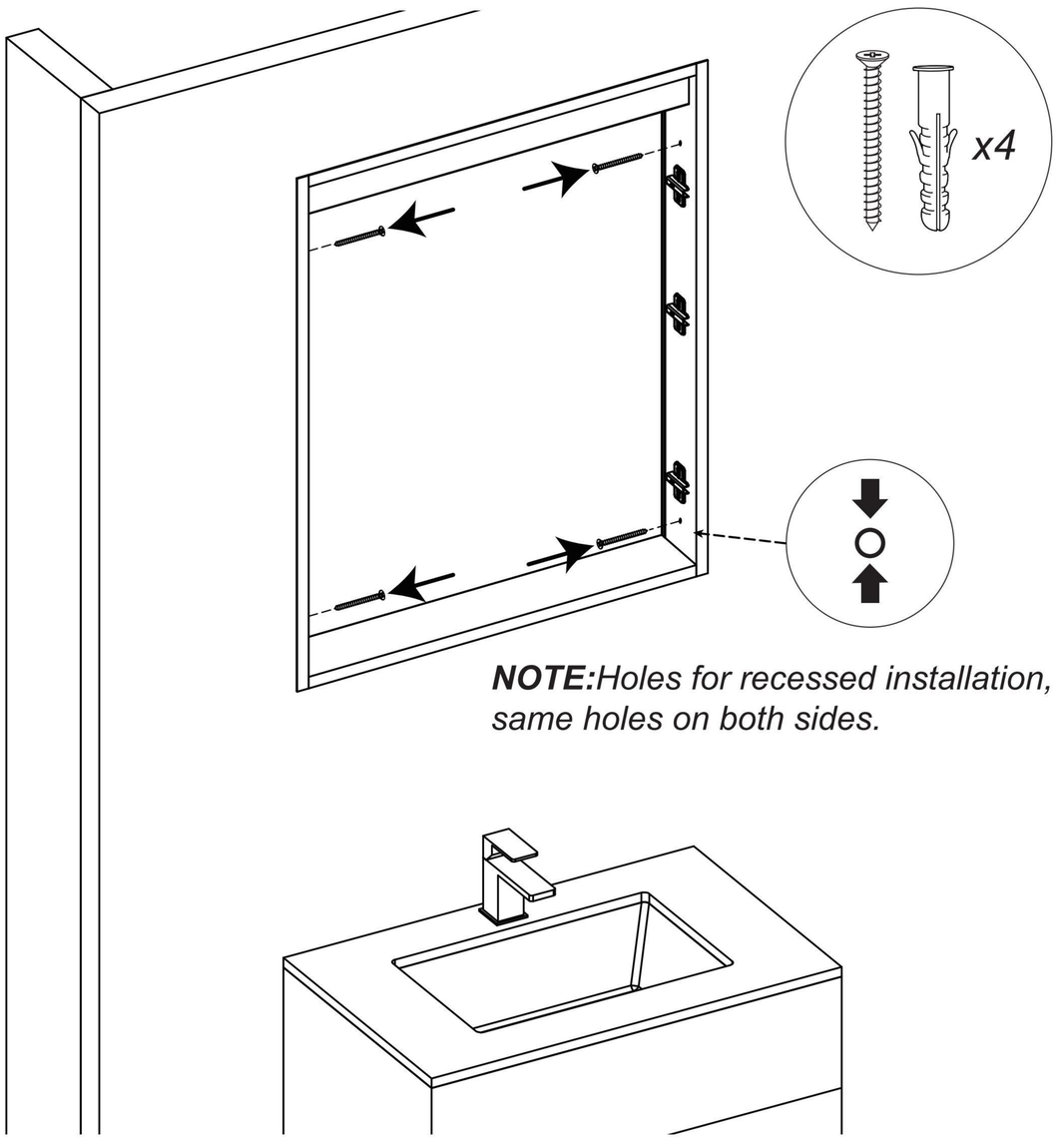

NOTE:*Holes for recessed installation, same holes on both sides.*

GLASS SHELF ADJUSTMENT

*** Remove the Door(s) before adjusting cabinet shelves.**

1. Insert the metal glass shelf clips into the shelf holes on both sides of the mirror cabinet.

2.Insert the Glass Shelf along the board clip slot.

3.Use a Phillips screwdriver to tighten the screw at the bottom of the metal shelf clip, securing and clamping the glass shelf in place.

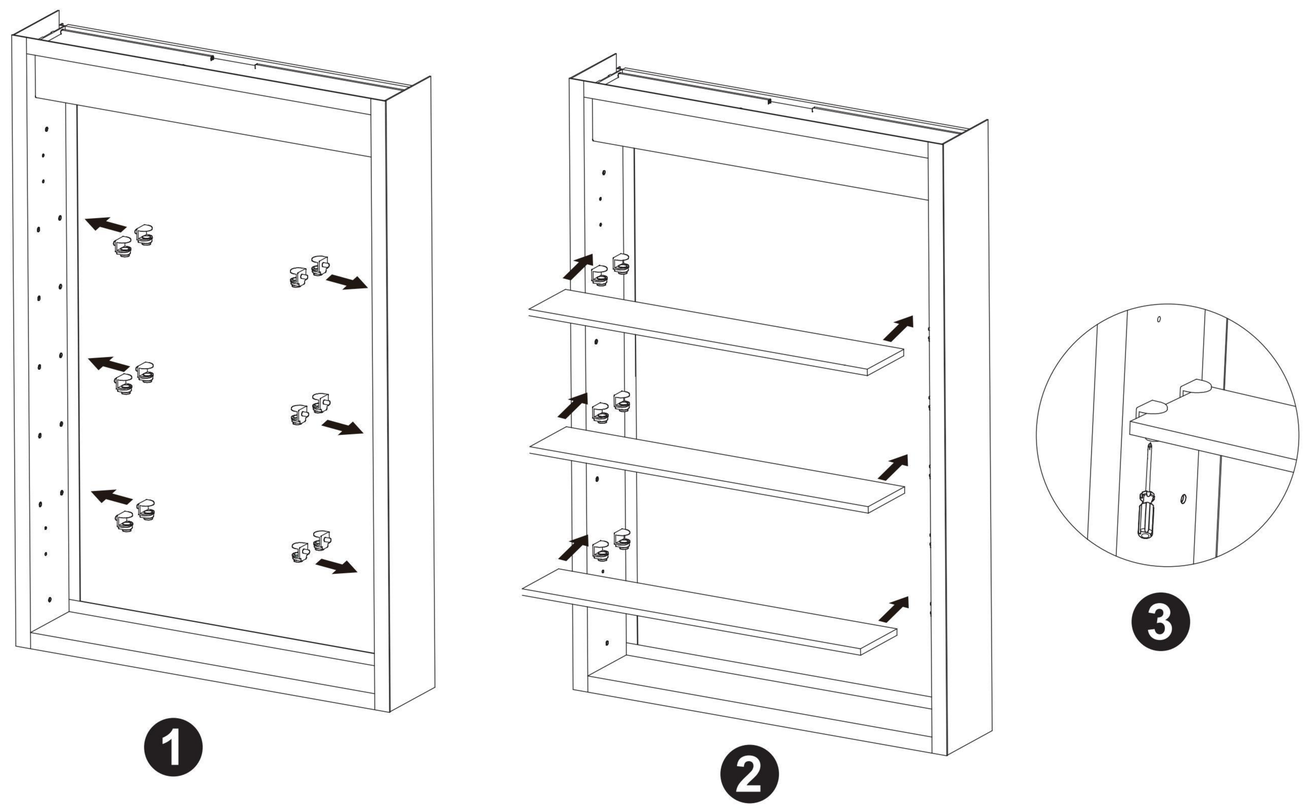

MIRROR DOOR INSTALLATION

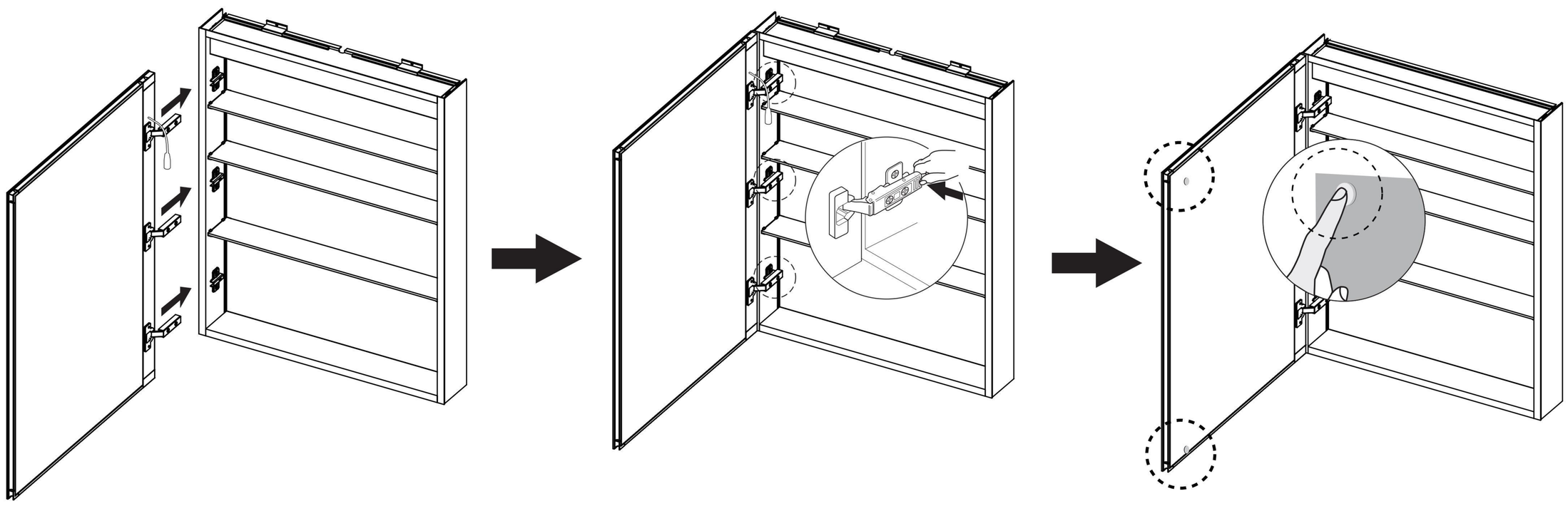

1. Slide the doors into place by pinching the end of the hinges.
2.Plug the door into the cabinet.

Press the end of the hinge to match the hinge seat

Installing cabinet door bumpers

Door Adjustment / Door Removal

OPTIONAL DOOR ADJUSTMENT

Doors may need to be adjusted after the initial shipping of the cabinet. The cabinet doors have a three-way adjustment feature. Height, side-to side, level and depth can be adjusted. With the hinge slightly closed you can access the middle screw for up/down adjustment.
With the hinge fully extended you can access the front and back screws.These screws will move the door side to side and in and out.

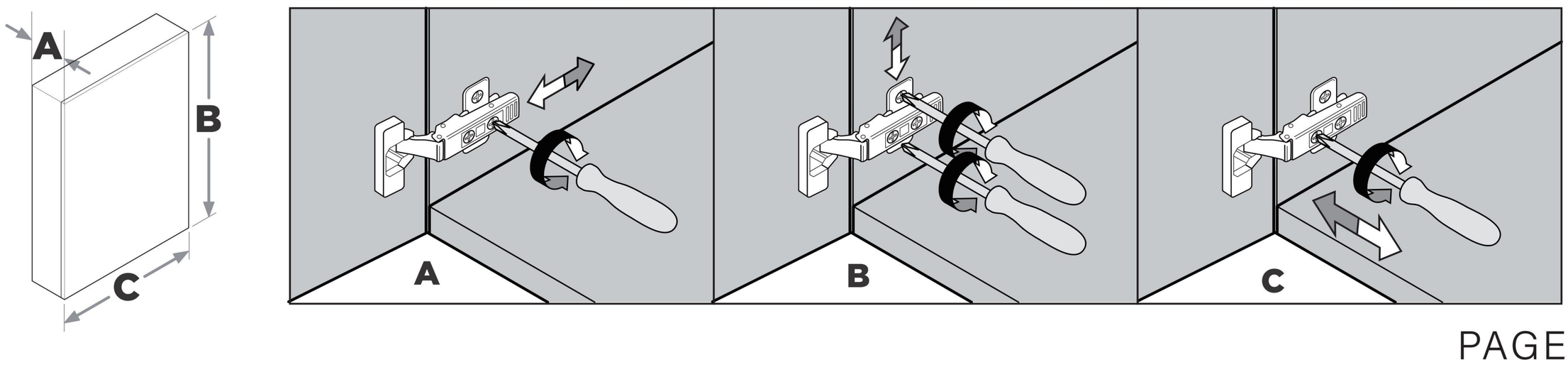

WARNINGS:

1.Please do not use if you found the mirror cabinet has been broken.

2.Never put any sharp or heavy material on the mirror surface, other wise the glass mirror will be broken and body injury accidents may occur .

3.Turn off the power switch in storm lightning weather to avoid electric parts damage.

Use and Maintenance:

CAUTION:

● USE

1 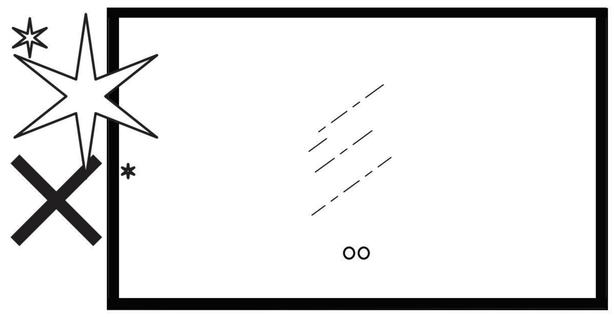	1. To avoid damage, do NOT knock the mirror cabinet with any hard objects;

● CLEANING

2 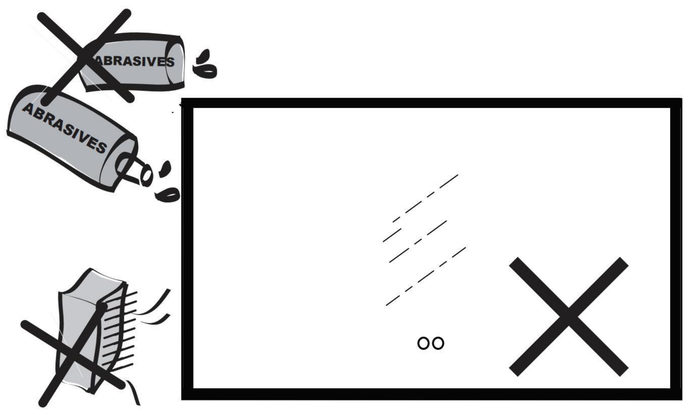	2. Do NOT clean the mirror cabinet with caustic cleaner. Do NOT wipe the mirror cabinet with Bristle brush;

● MAINTENANCE

3 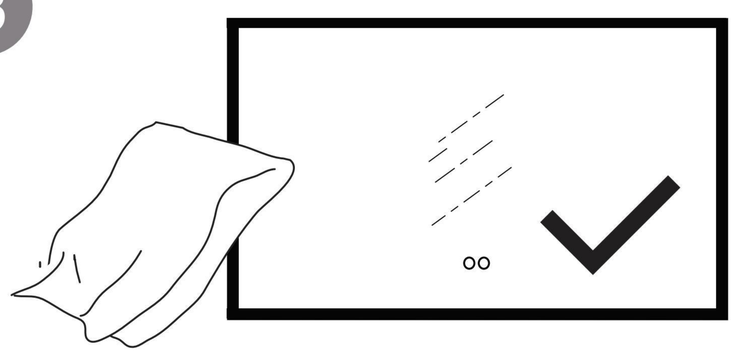	3. For daily maintenance, please use soft cloth and mild cleaner to clean the mirror cabinet.

LIMITED WARRANTY TWO YEARS TERM:

We warrants to the original purchaser that, it will, at its election repair,replace, or make appropriate adjustment to products made by this company shown to have significant defects in material or workmanship which are reported to in writing within two (2)years from the date of delivery. We are not responsible is for installation costs. The warranty is void in the event the product is damaged in transit, or if damage or failure is caused by abuse, misuse, abnormal usage, faulty installation, damage in an accident,improper maintenance,or any repairs other than those authorized .At the expiration of the two years warranty period, we shall be under no further obligation under any warranty, expressed or implied,including the implied warranty of merchantability. we shall not be liable for any consequential damages arising out of or in connection with the use or performance of its products. Some states do not allow limitations on how long an implied warranty lasts or do not allow the exclusion or limitation of incidental or consequential damages, so the above limitation or exclusion may not apply to you.Any liability against under any implied warranty, including the warranty of merchantability, is expressly limited to the terms of this warranty. Permission to return any merchandise under this warranty must be authorized and returned prepaid by the purchaser. Claims under this warranty should be sent directly to your dealer.