ASSEMBLY INSTRUCTIONS

Thank you for choosing our product!

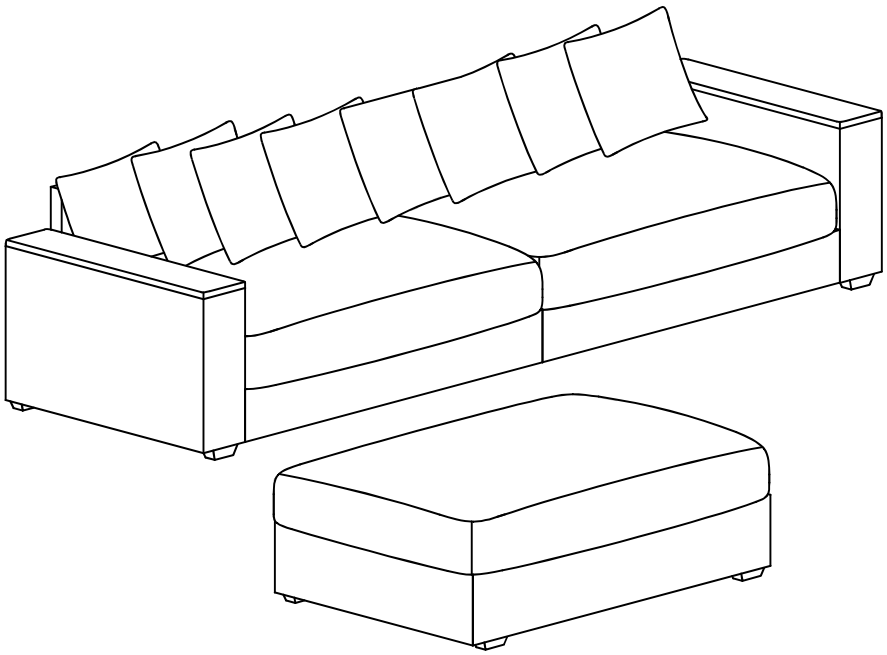

! Note: Vacuum compress it, open it carefully, and pat it with your hand a few times to let it unfold evenly, it will return to its full state after about **72** hours.**(Refer to the full instructions that follow for details on how to do this.)**

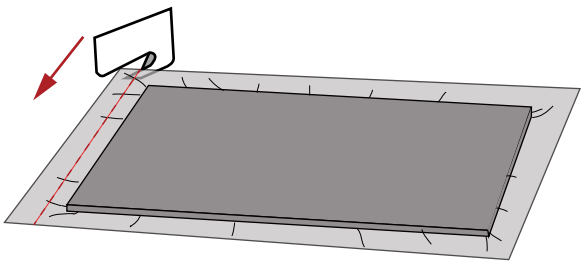

Be careful.
Open

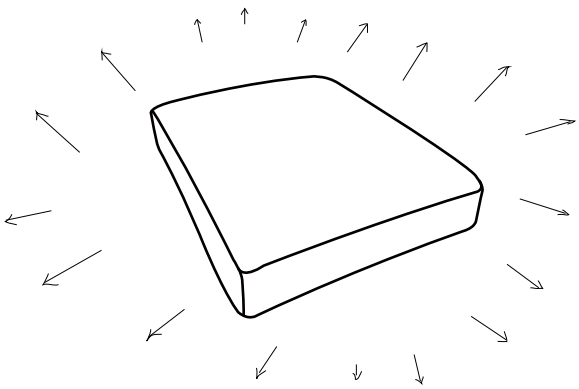

L/M/N/O

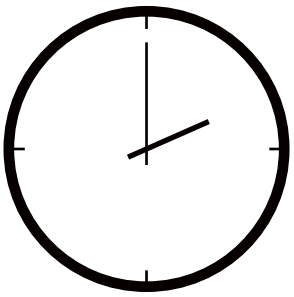

...Wait 72h

After opening the compression bag (Note: Please do not cut with a knife, so as not to damage to the product), the corners around the cushions if there are wrinkles, you need to wait for about 72 hours, it is recommended that guests pat and knead the corners of the sofa, in order to sponge better recovery. If needed, contact the seller to provide a video of patting and finishing the sofa.

If you need any help, please take a picture and contact the seller.

PART LIST:

A 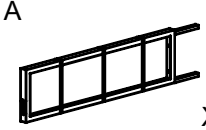 X1	B 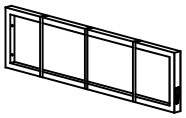 X1	D X1	E X1	F 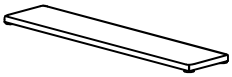 X2	G X1
H 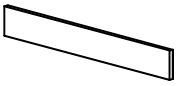 X1	I 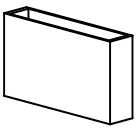 X1	J 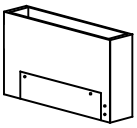 X1	K 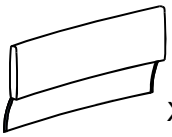 X1	L 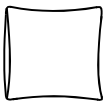 X8	M 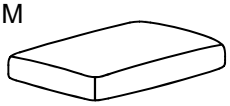 X2
N 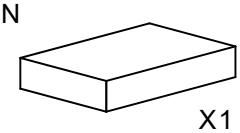 X1	O 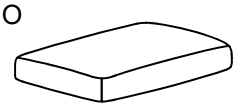 X1	P M5*20 X4			

PART LIST:

a X2	b X1	c 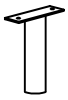 X3	e 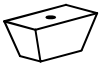 X8	f 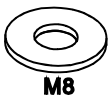 M8 X8	g M6 X46
h X4	i M8*50 X8	j M6*20 X24	k M6*25 X8	l M6*60 X12	m M6*100 X2
n M4 X1	o M5 X1	p 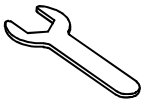 X1	q X8	r X2	s 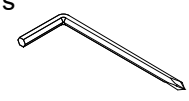 X1

STEP 1:

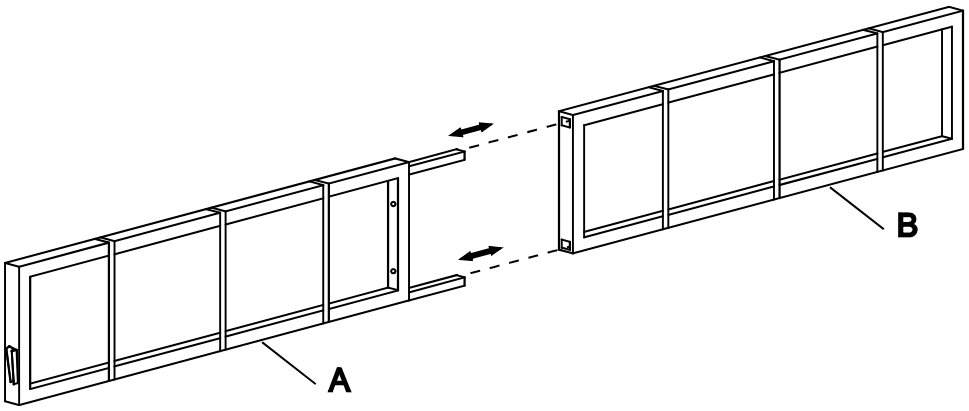

STEP 2:

You will need

n

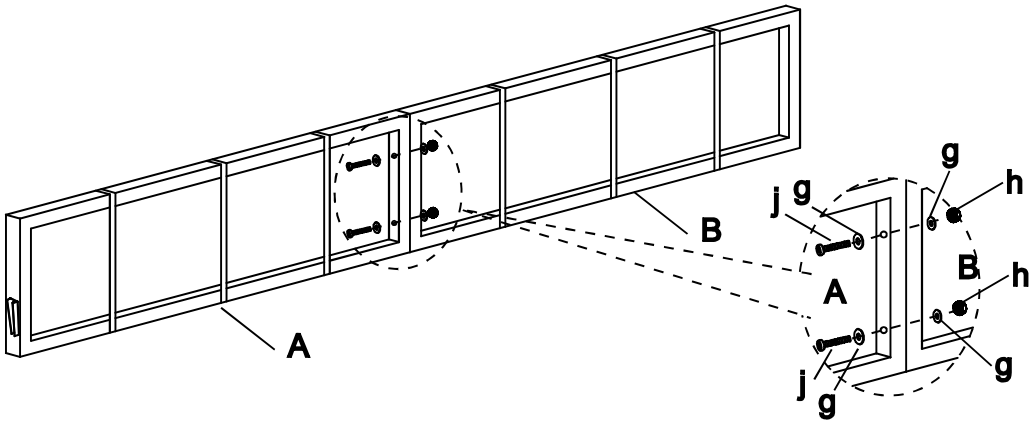

STEP 3:

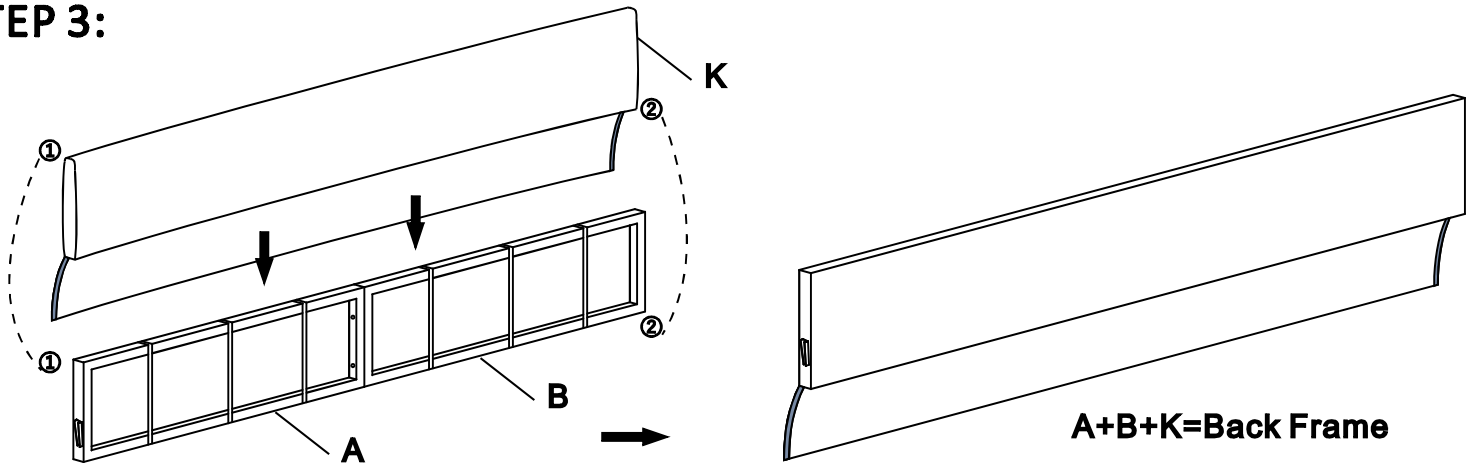

STEP 4:

You will need

o

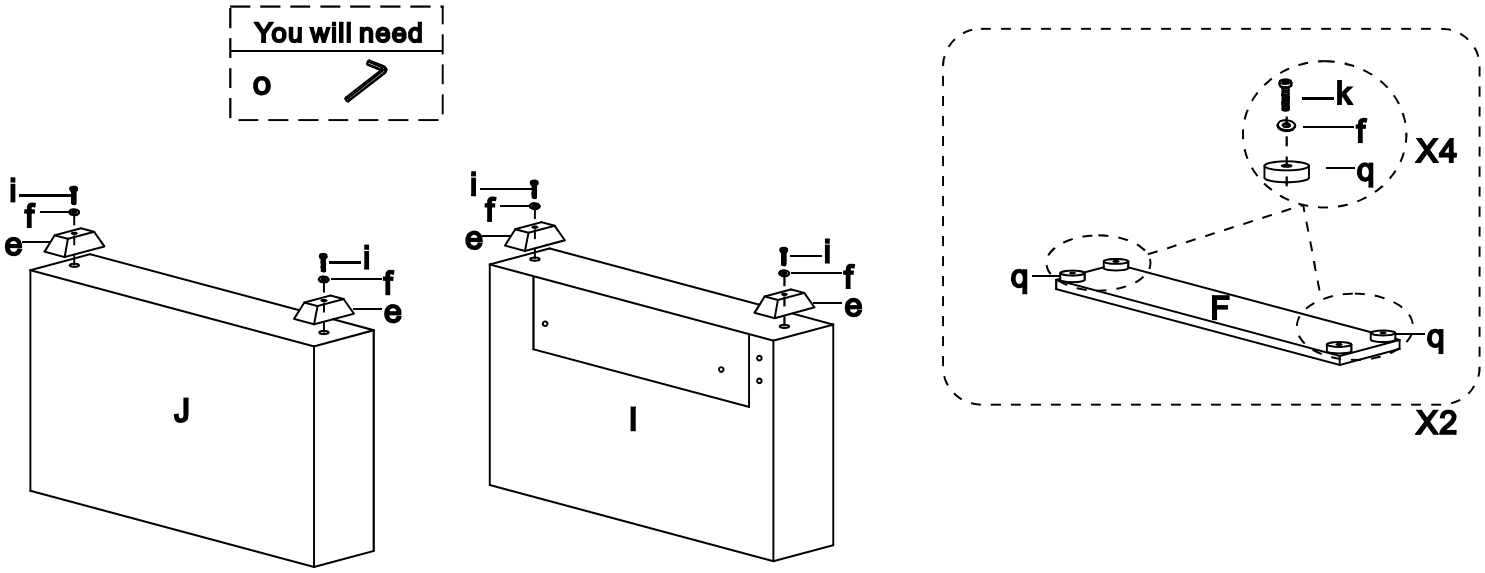

STEP 5:

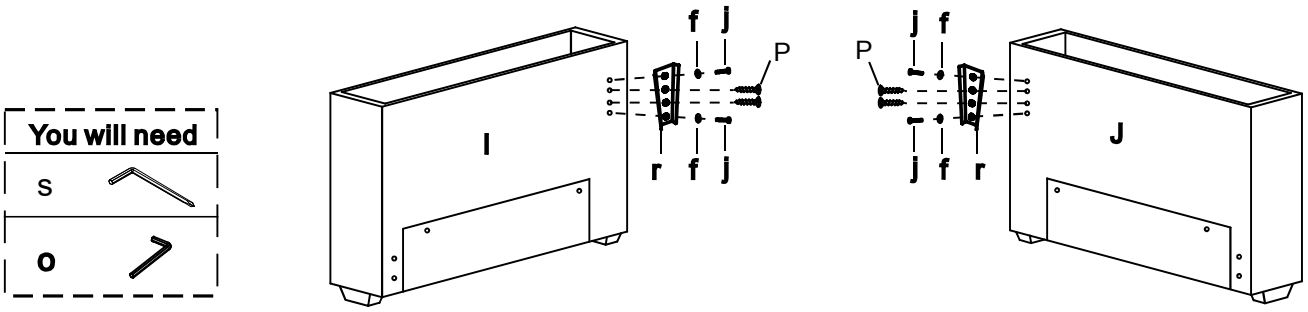

STEP 6:

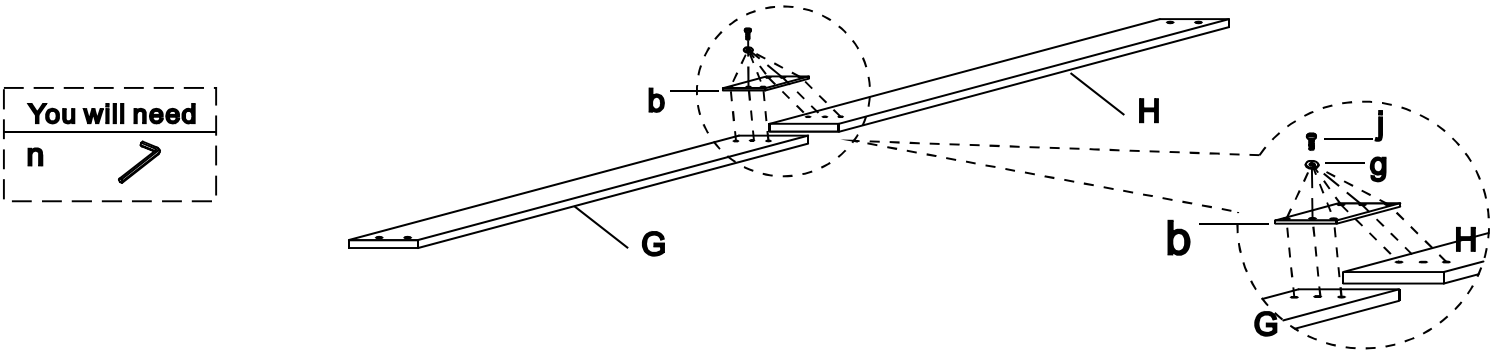

STEP 7:

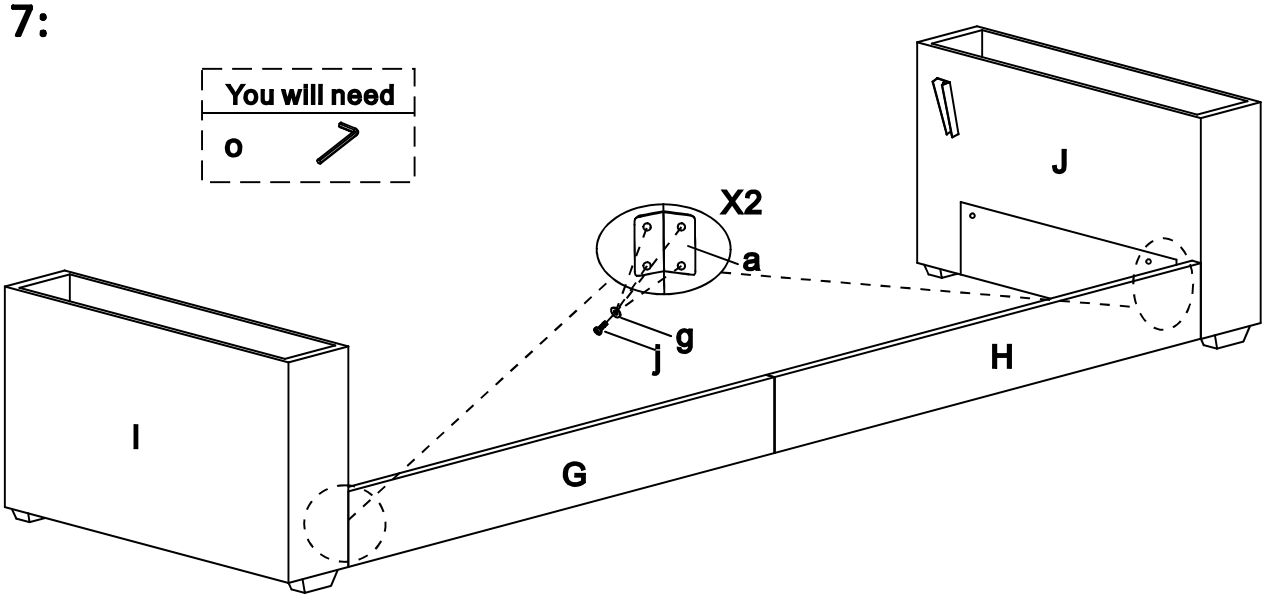

STEP 8:

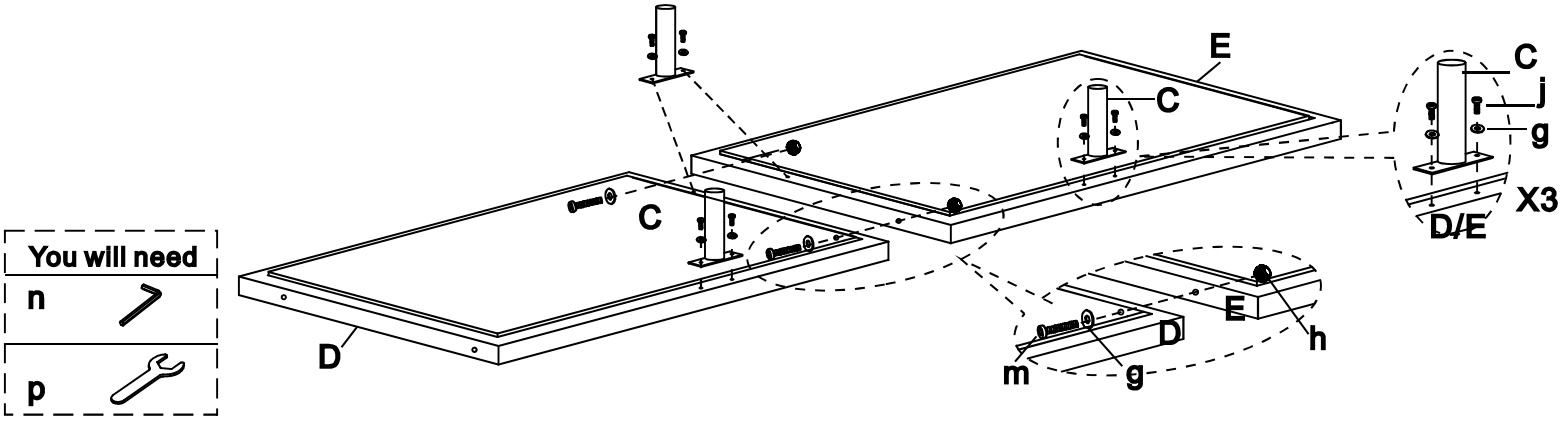

STEP 9:

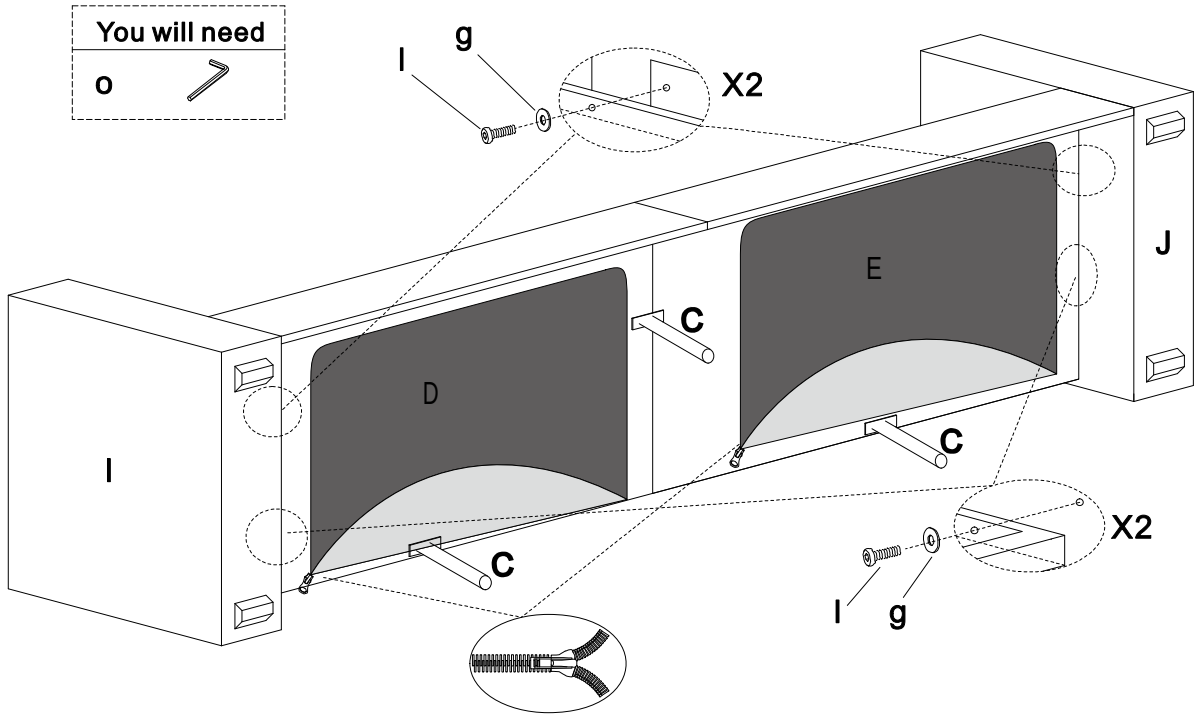

STEP 10:

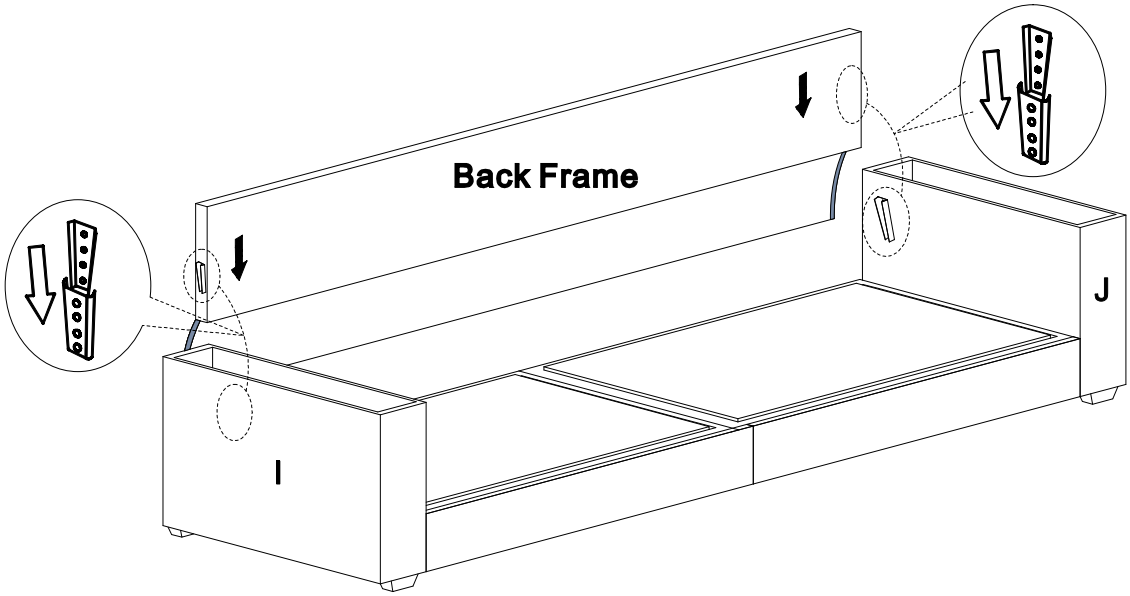

STEP 11:

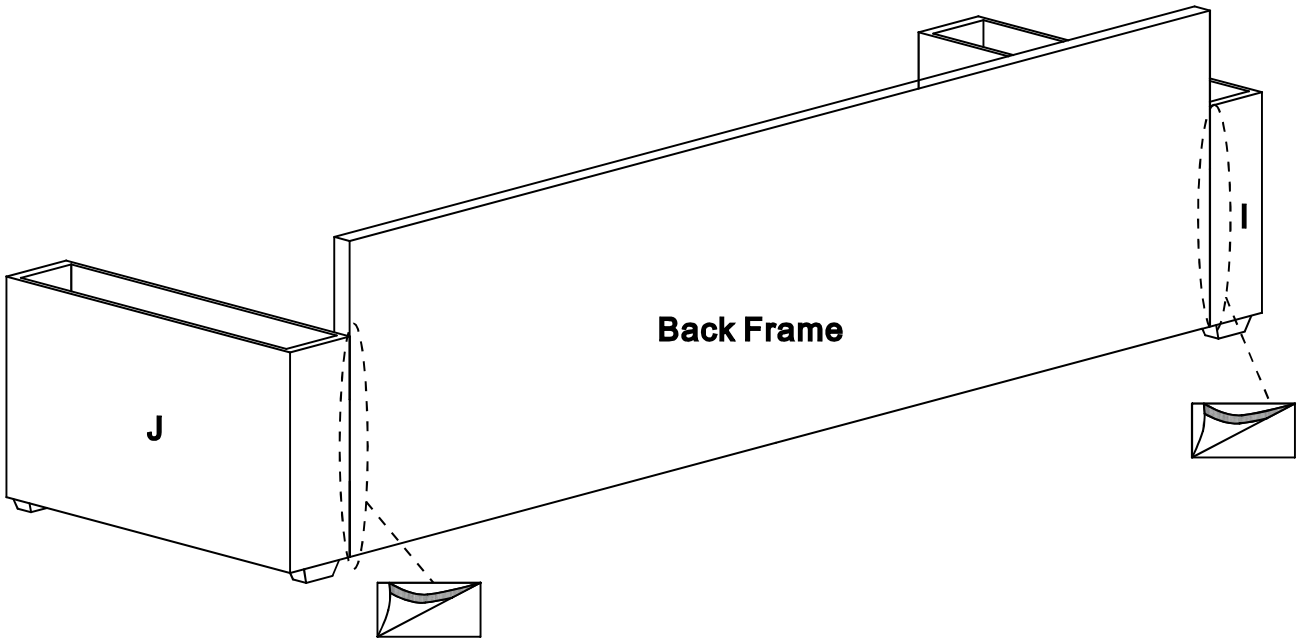

STEP 12:

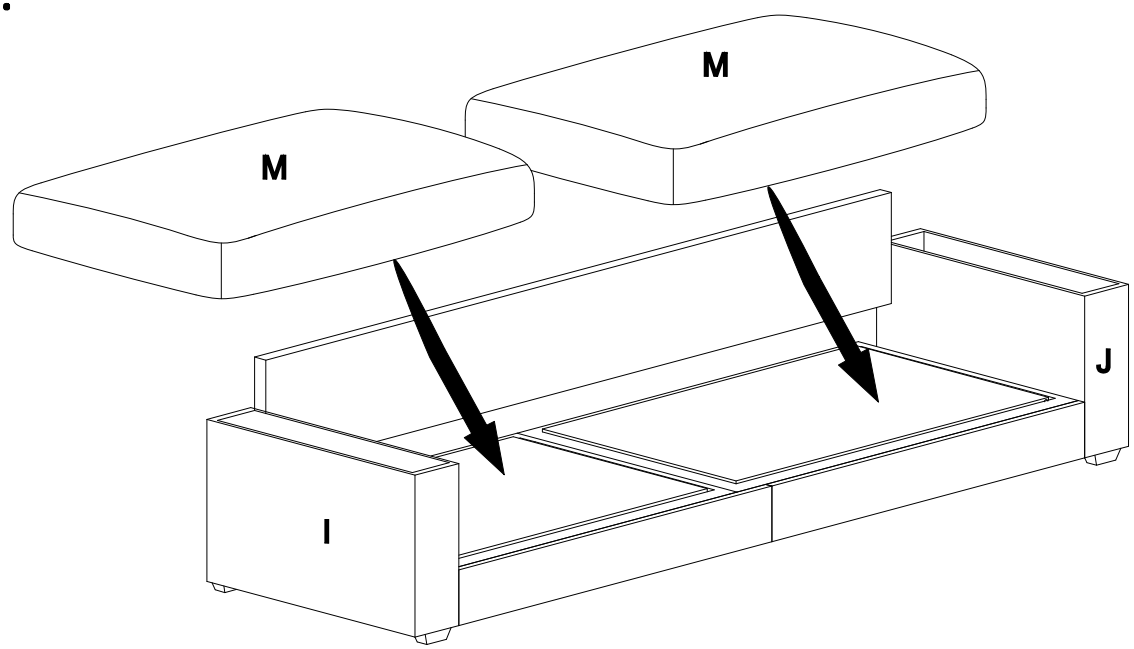

STEP 13:

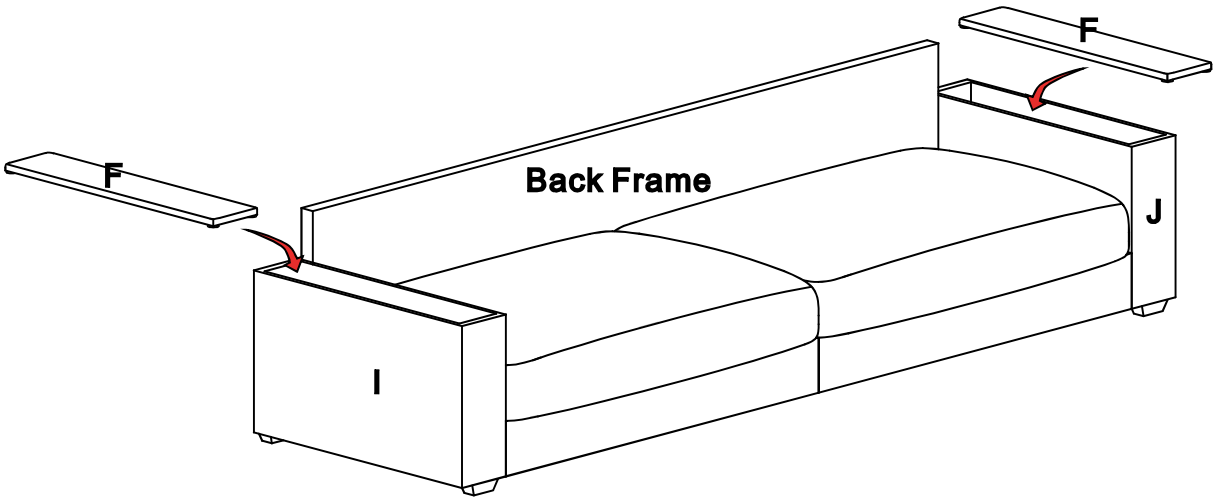

STEP 14:

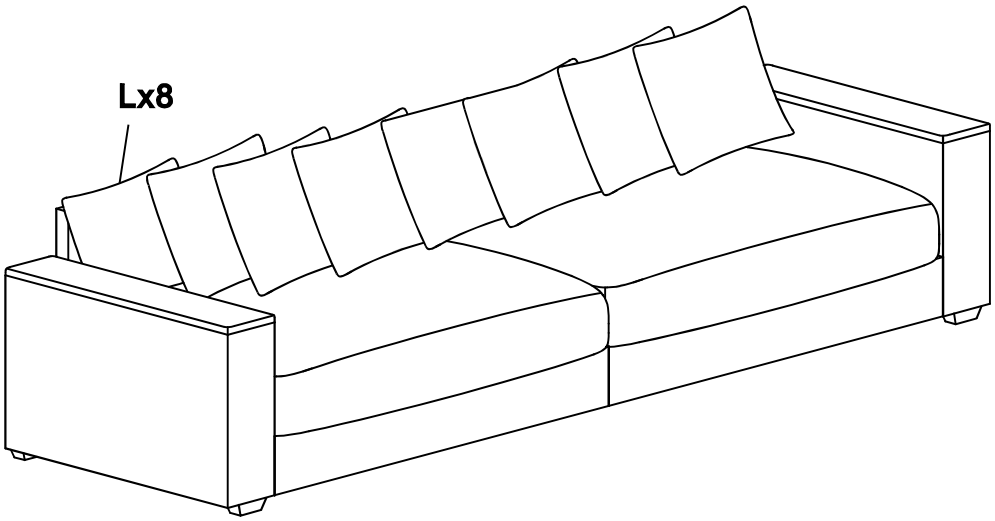

STEP 15:

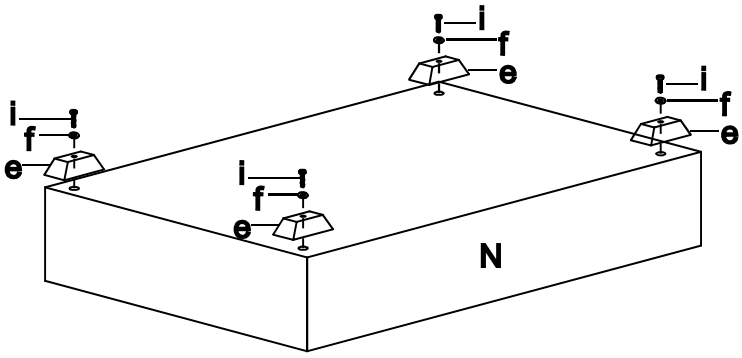

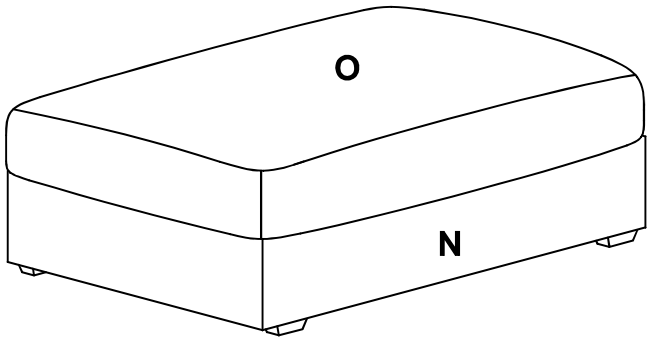

Done:

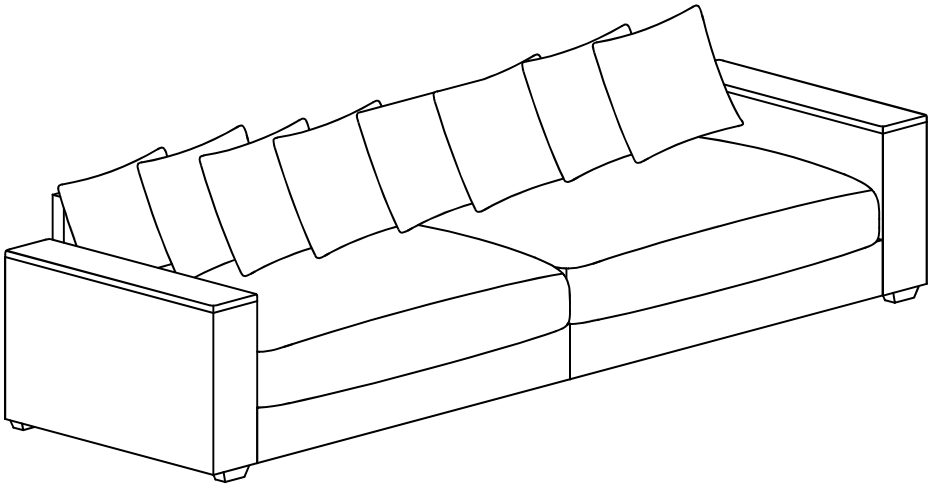

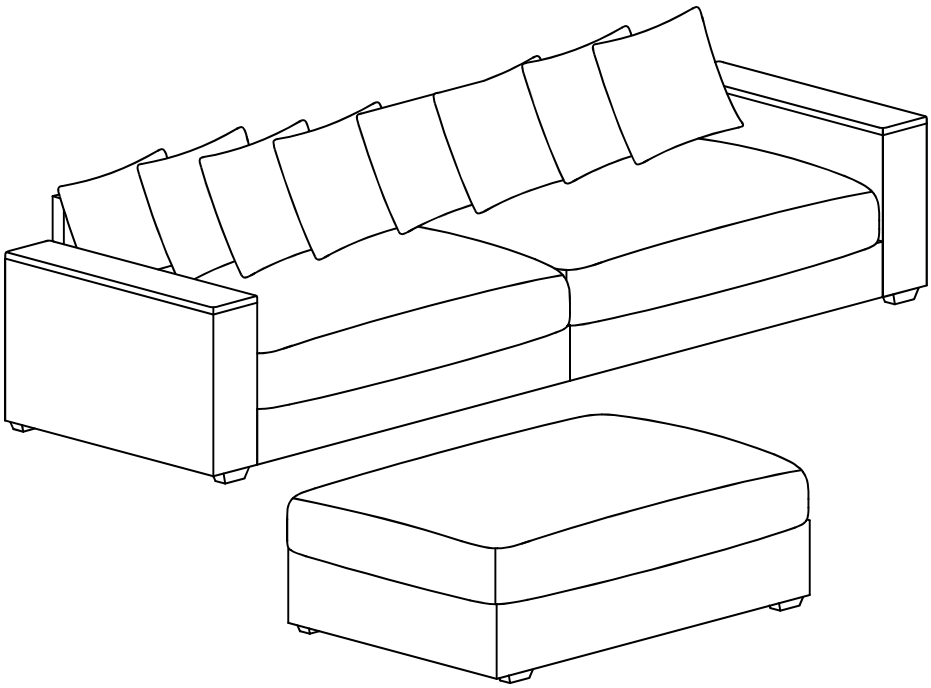

1. Suggestions before starting assembly: Read the instructions from beginning to end and prepare 2-4 adults for assembly, depending on the size of the product. Do not assemble directly on the floor or carpet, assemble on a clean non-abrasive surface (e.g. packing foam). Save all packaging until complete.

2. Return Policy: Do not return to the store! Skip the return process and contact us directly for your after-sales service. Let us know the details of your order and any problems you encounter and we will be happy to help you with solutions or answer any questions you may have.

3. Assembly precautions: After opening the package, remove all internal hardware packaging and take out the parts. Then refer to the manual to count the parts and quantity and make sure no parts are missing. Some critical parts of your product may be stored and hidden in other parts. Please open any storage compartment with a zipper or hook and loop and remove all parts. (Example: the cushions and legs are stored at the bottom of the sofa). If you find any parts missing, first check carefully that the box is complete to see if parts have spilled out and been scattered inside the carton, or if the carton has been broken causing parts to be missing. If you encounter any problems during the assembly process and find that you can not continue, please rest assured that we will help you solve the problem as soon as possible. Simply store all parts of your product in a safe place and contact us immediately so that we can help you further.

4. Care and Maintenance: Do not place hot objects directly on the surface of the furniture. Do not clean furniture with harsh cleaners or polishes. Do not leave furniture in direct sunlight. Do not place furniture near heating or cooling vents. Do not write on furniture without a pad to protect the surface. Do not leave furniture outdoors, for indoor use only. Do not use for commercial purposes, for residential use only. Stains can be removed with a mild soap solution and a damp cloth. Children should not climb or jump on furniture. Use a clean, colorless, lint-free cloth to remove dust.

Caution!
This product contains small parts. Please make sure they are kept away from children when installing.
Do not use power tools to assemble furniture. Power tools may peel or damage parts.