Assembly Instruction

ITEM # SW24L1889 / Two-toned Fluted Parquet 1 Door End/Side Table

Version：Sep 01,2025

PARTS	A	B	C	D	E	F	G			
QTY	1	1	2	1	1	1	4			

PARTS	H1	H2	H3	H4	H5	H6	H7			
QTY	8	8	4	1	12	2	1			

STEP 1

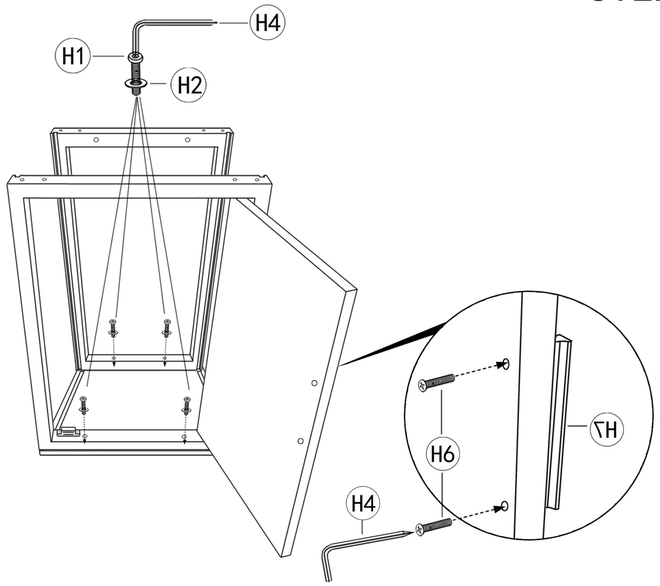

STEP 2

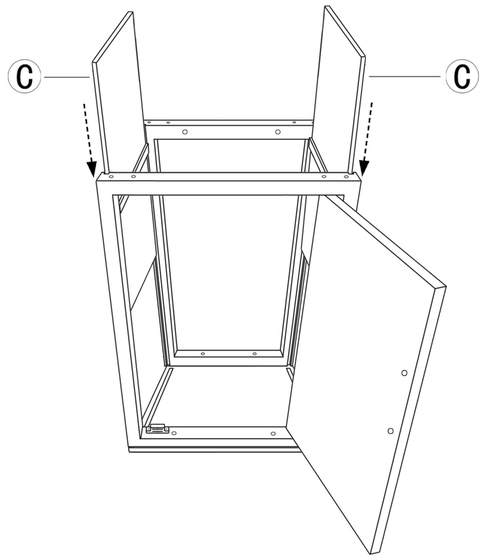

STEP 3

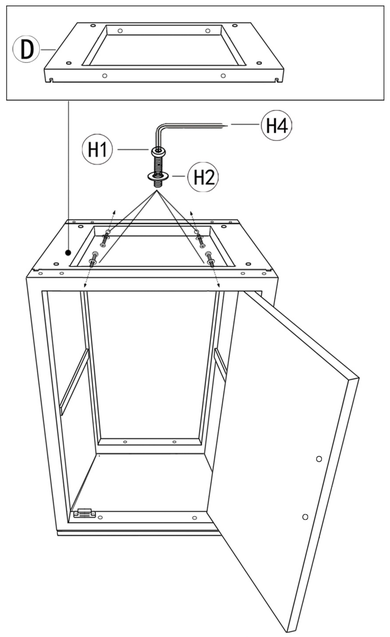

STEP 4

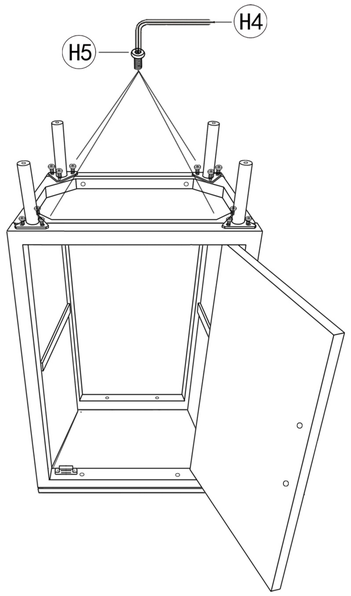

STEP 5

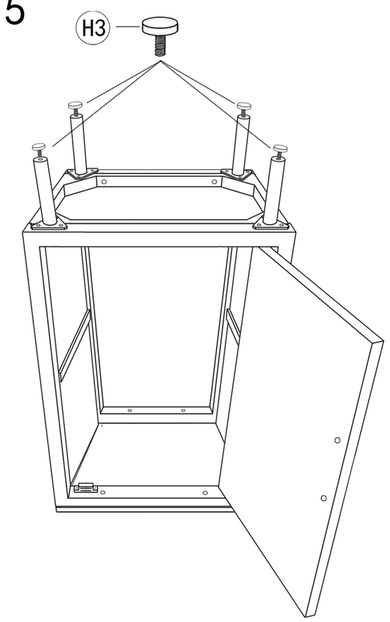
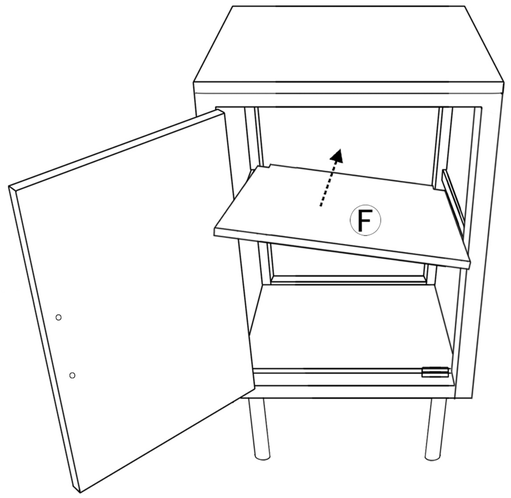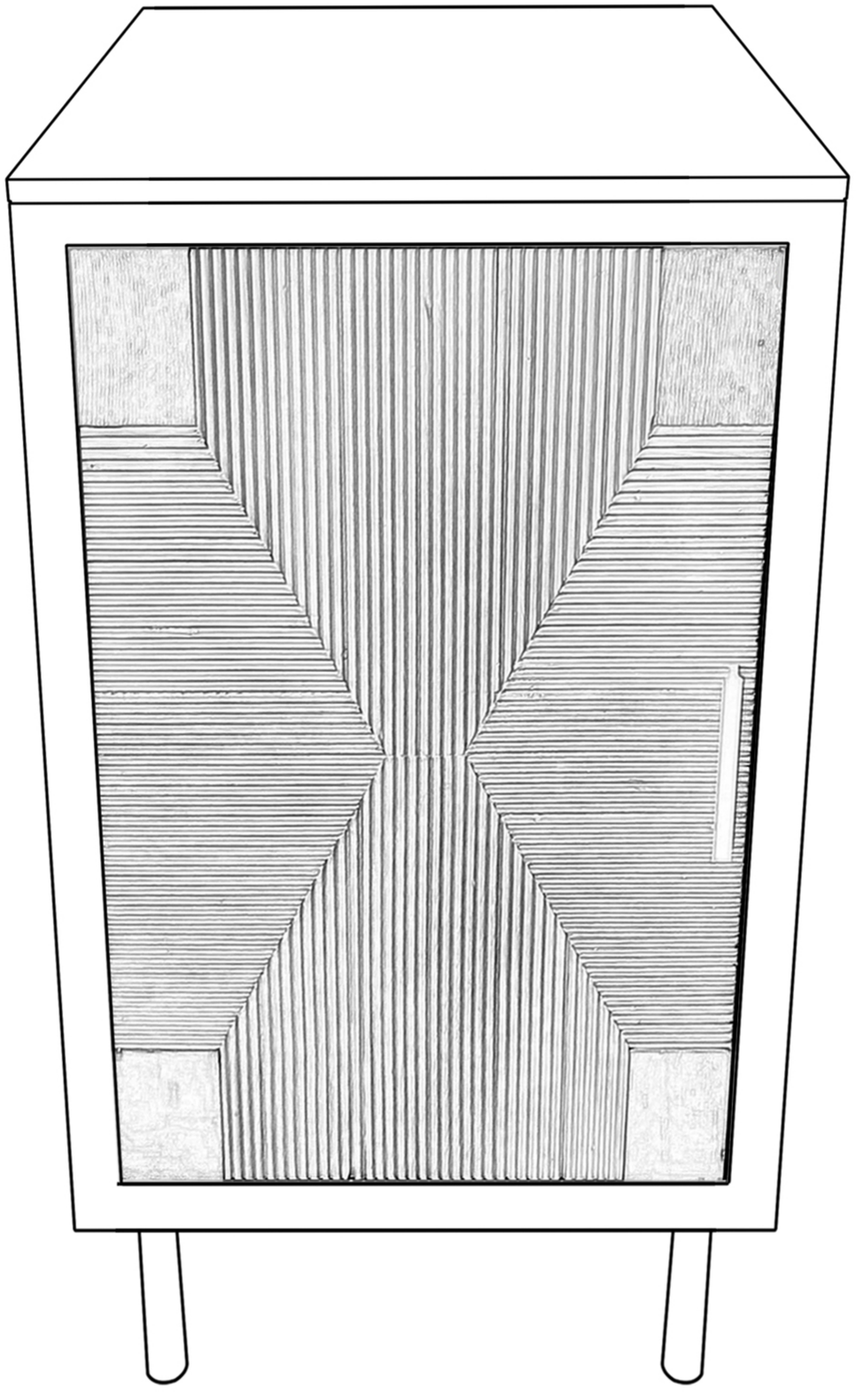
STEP 6