TTR0051-BKA

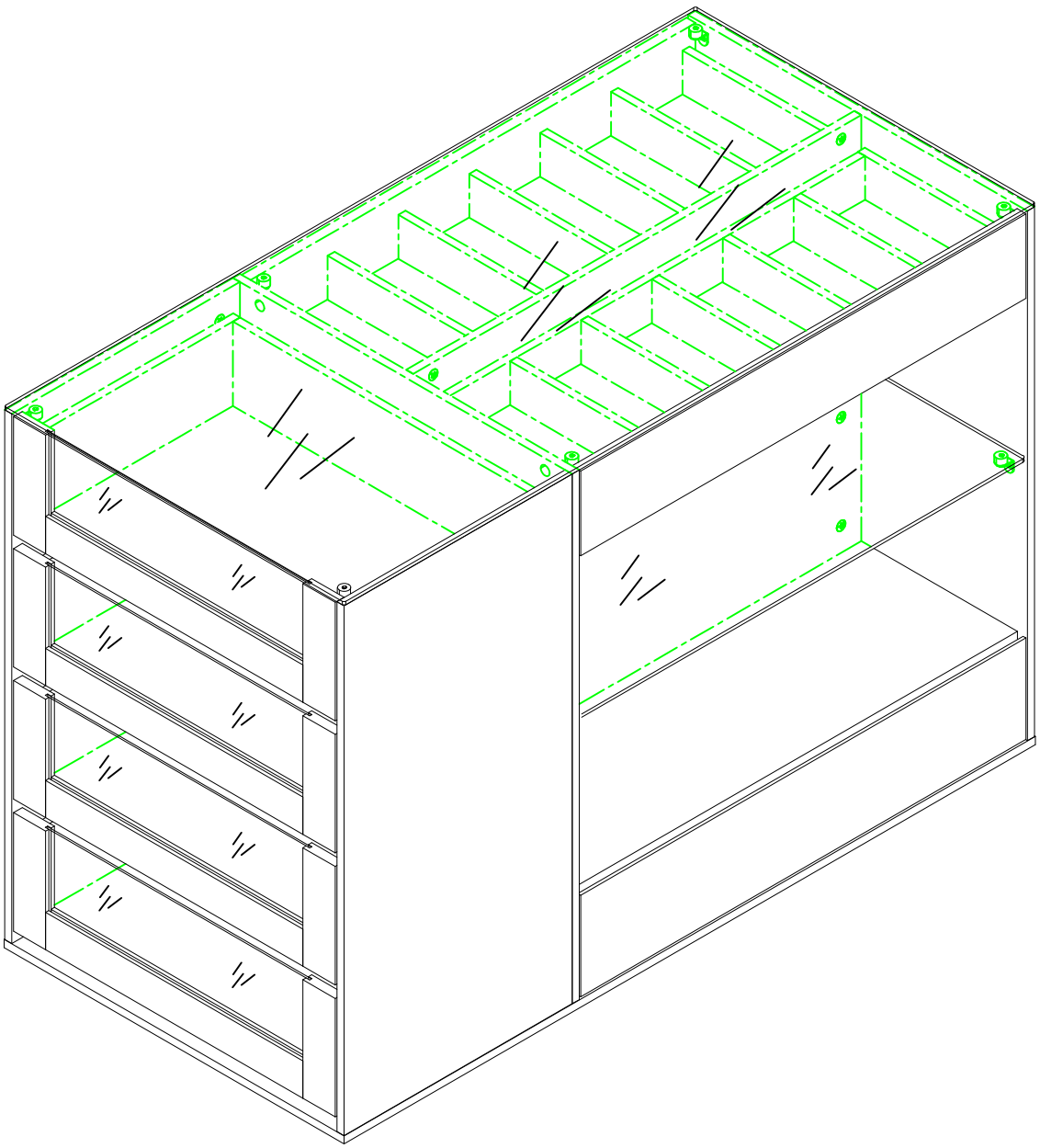

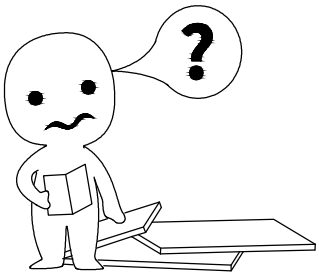

IMPORTANT INFORMATION!

please read the entire manual before starting to assemble and/or using this product.follow the manual thoroughly and keep it for further reference.

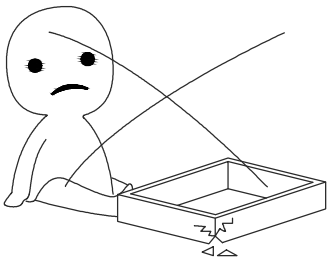

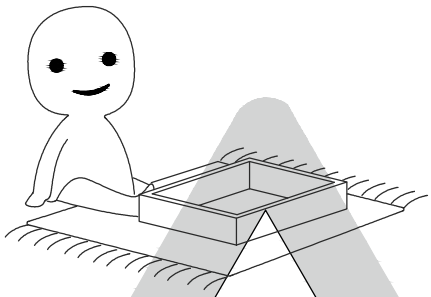

AVOID SCRATCHES!

In order to avoid scratching this furnuture should be assembled on a soft layer-could be a rug.

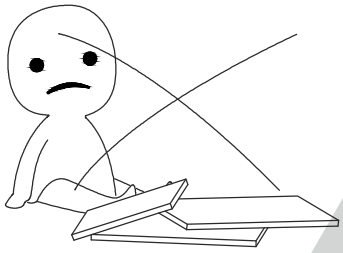

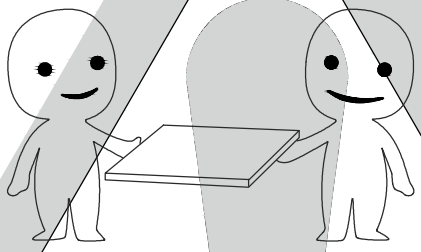

IMPROVE EFFICIENCY !

Try to find a partner to install with you, which can speed up the installation efficiency and shorten the time.

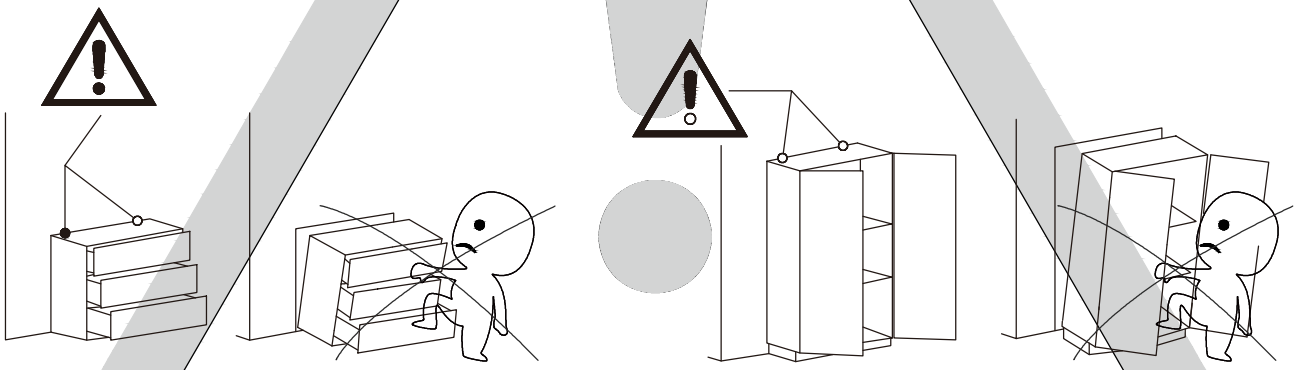

ANTI-TOPPLE WARNING !

Overturned furniture can cause serious or fatal crush injuries. To prevent tipping over, be sure to use the wall attachment, if not included with this product. Please purchase the wall attachment that fit your wall. If unsure, seek professional advice. Please read and follow each step of the instructions carefully.

IMPORTANT !

It is important that any product which is assembled using any kind of screw is re-tightened 2 weeks after assembly,and once every 3 months - in order to assure stability through-out the lifespan of the product.

For regular maintenance and cleaning of the product, for the frame, please use a rag dipped in neutral detergent to fully wipe it, and then dry it with a clean rag.For glass materials, wipe with a rag dampened with water glass cleaner, and then dry with a dry rag.

Do not use an electric screwdriver, and do not use too much force when installing, because the board is easy to break.

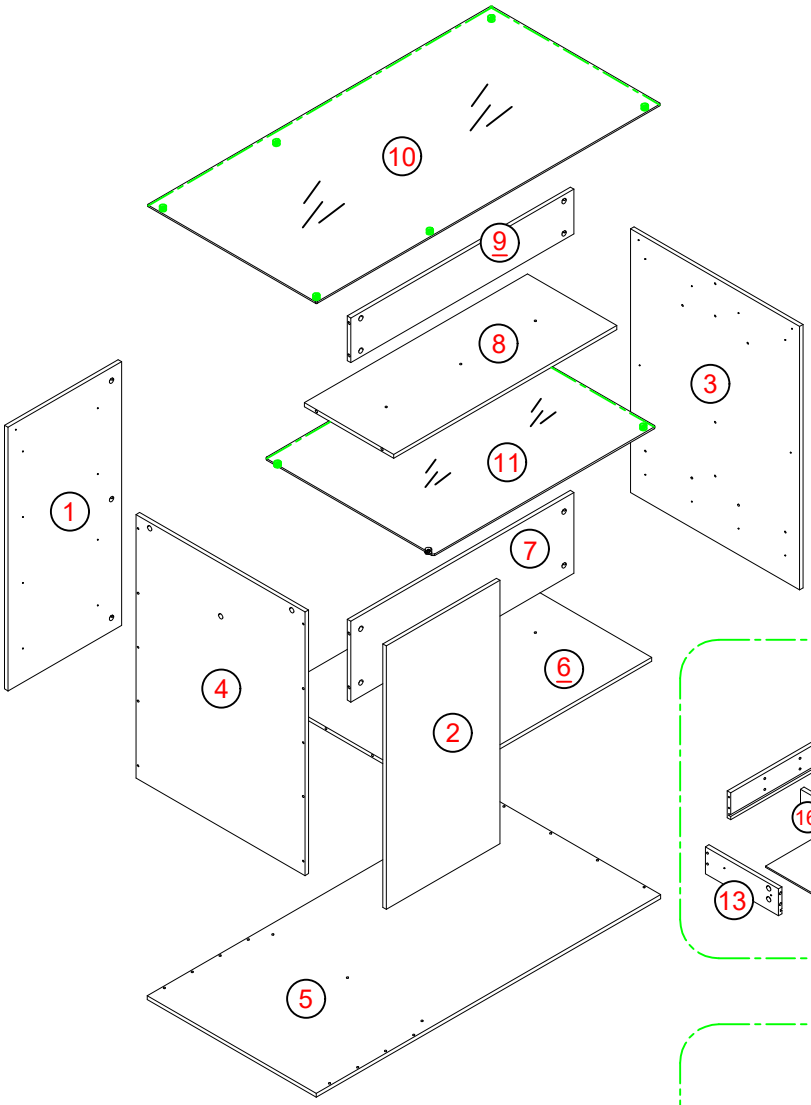

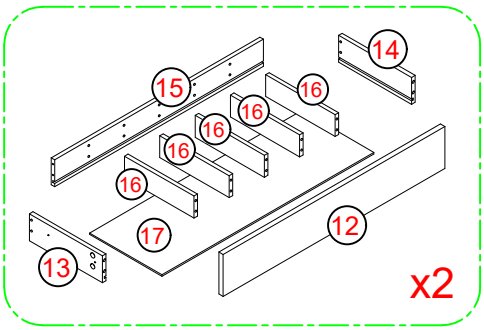

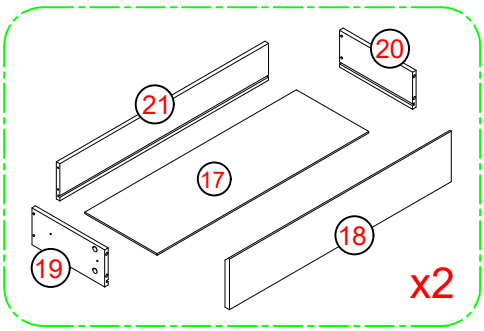

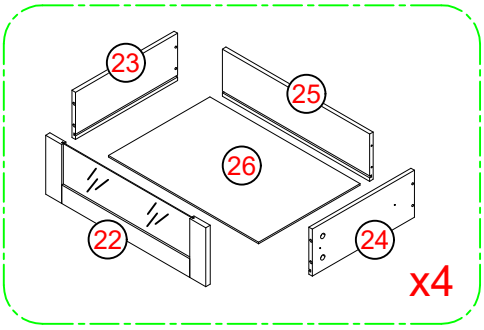

Cam Lock Fastening System

This Cam Lock Fastening System will be used throughout the assembly process

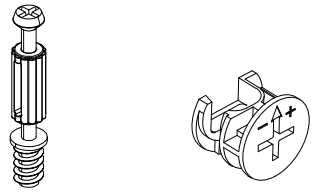

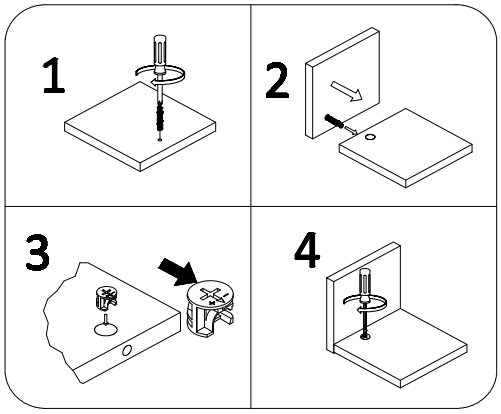

1

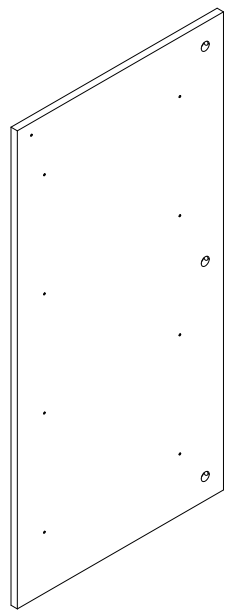

2

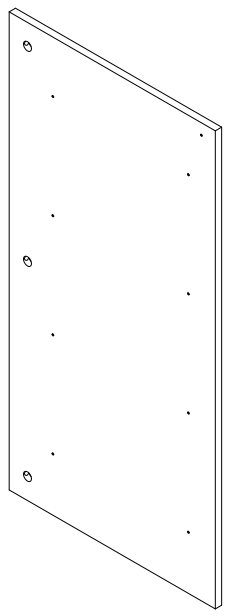

3

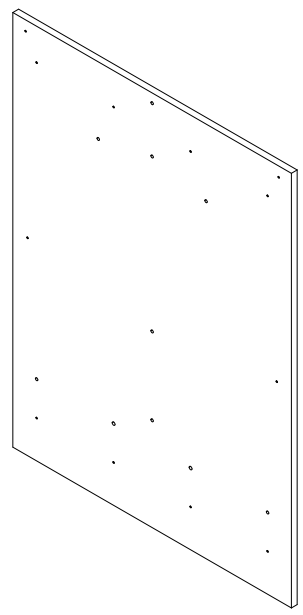

4

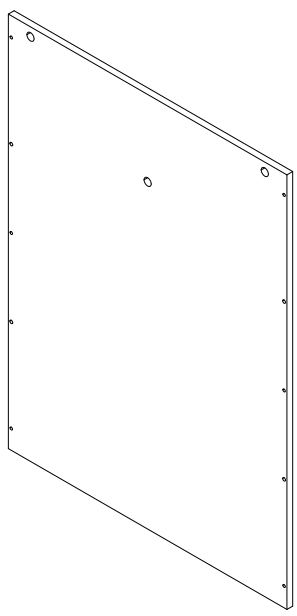

5

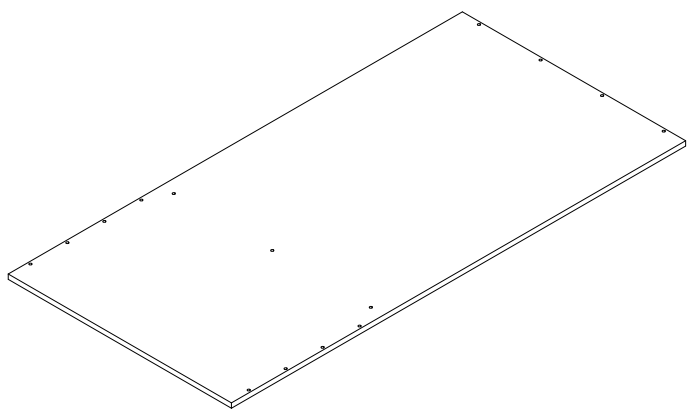

6

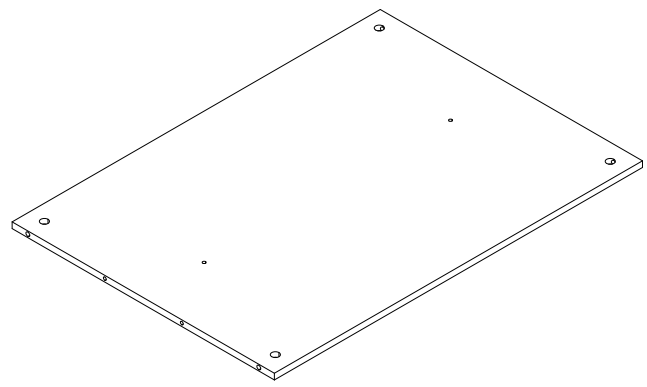

7

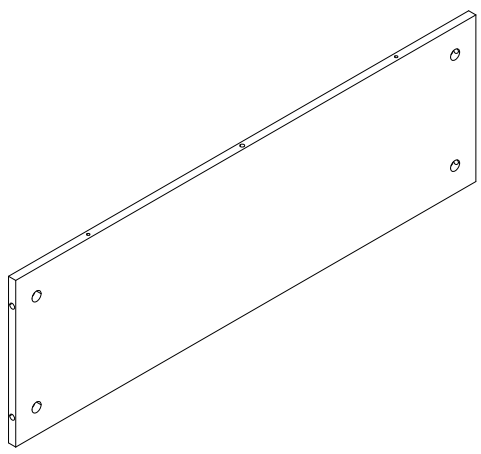

8

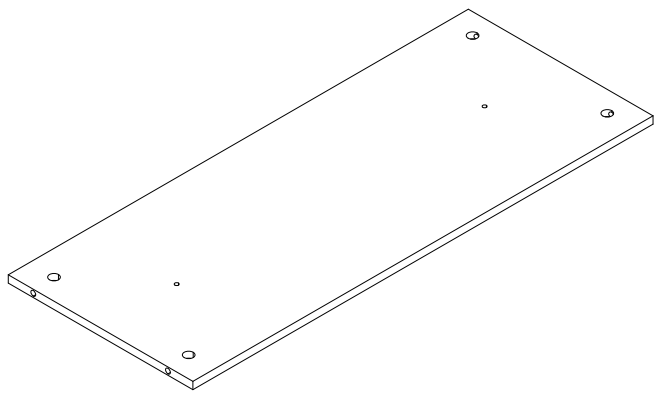

9

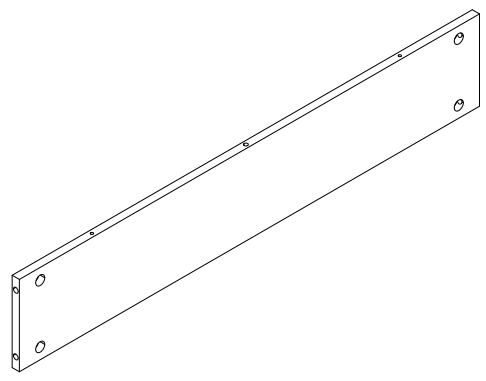

10

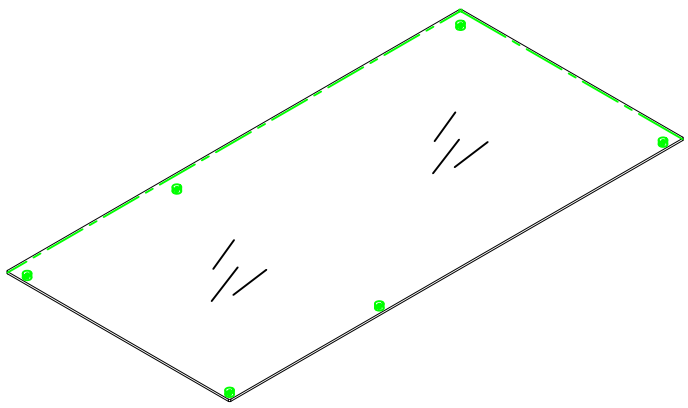

11

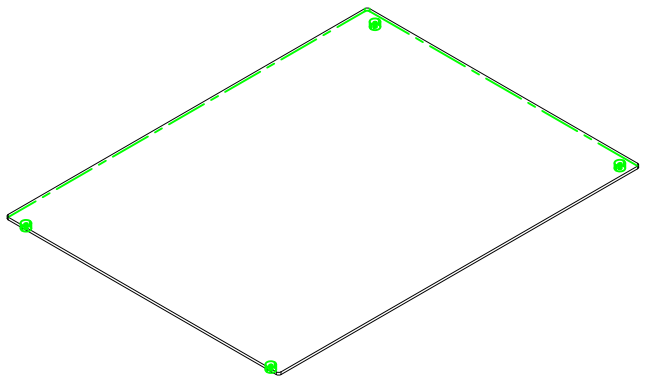

12

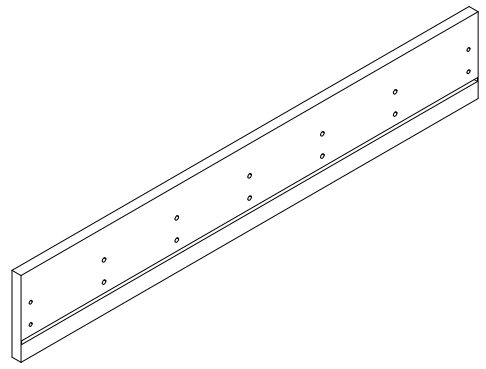

x2

13

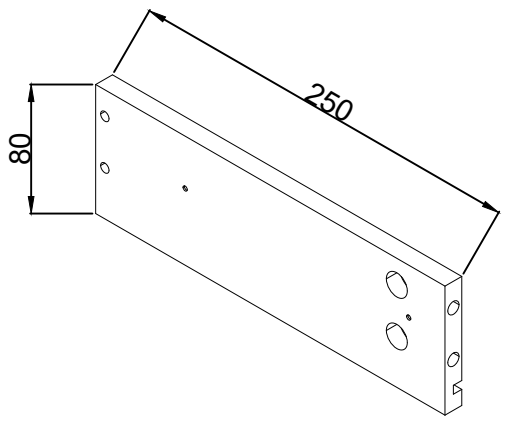

x2

14

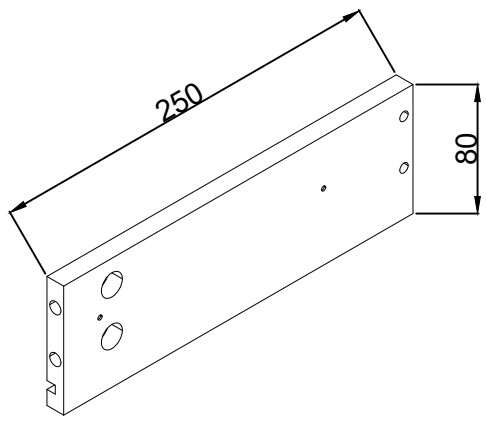

x2

15

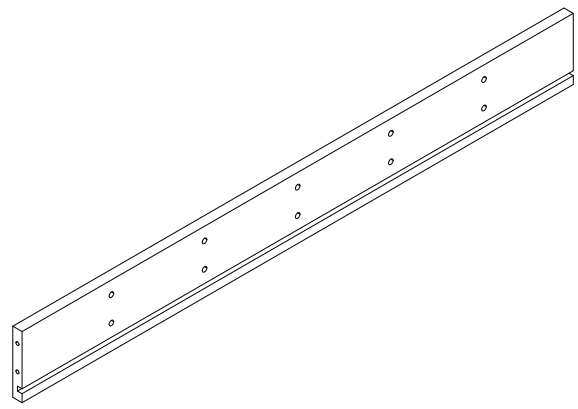

x2

16

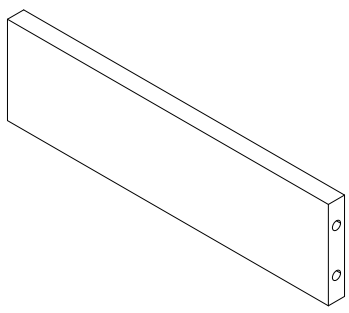

x10

17

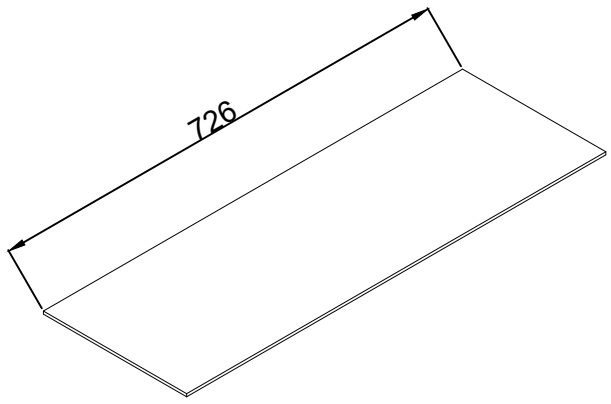

x4

18

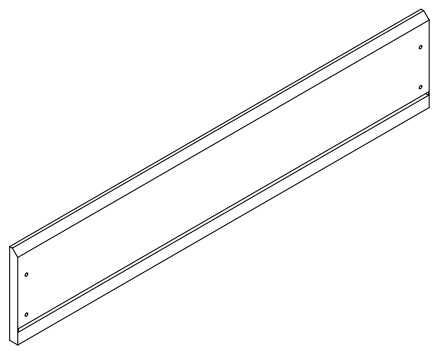

x2

19

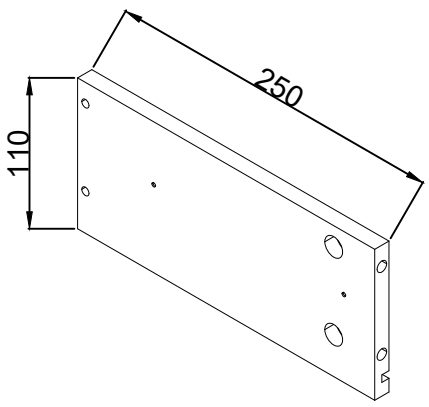

x2

20

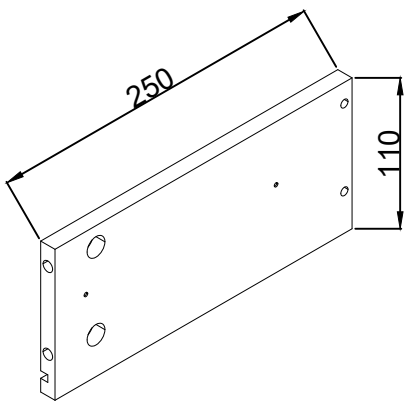

x2

21

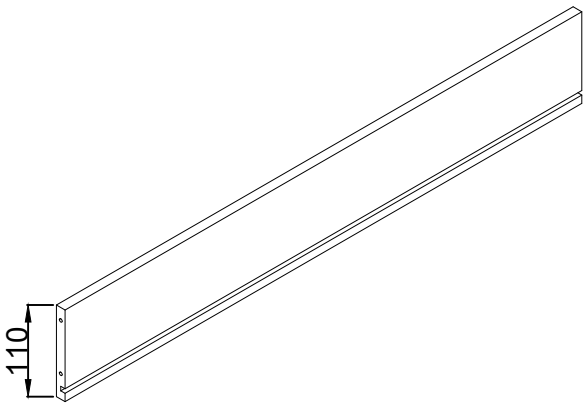

x2

22

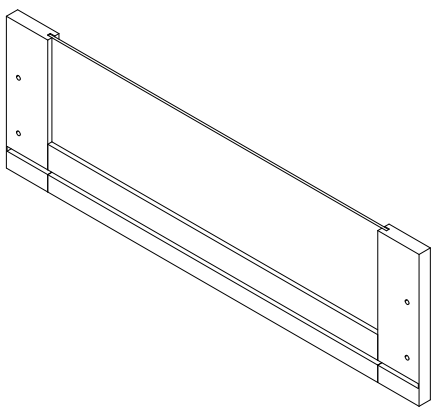

x4

23

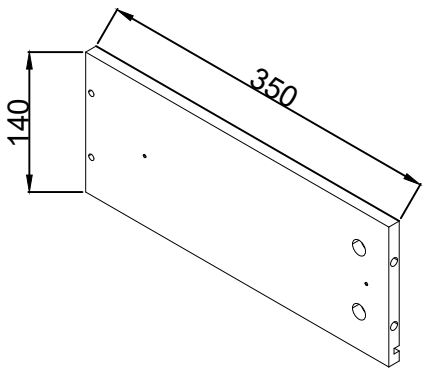

x4

24

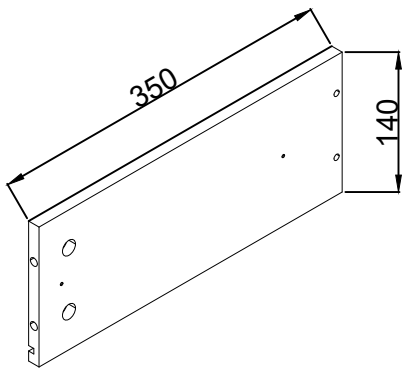

x4

25

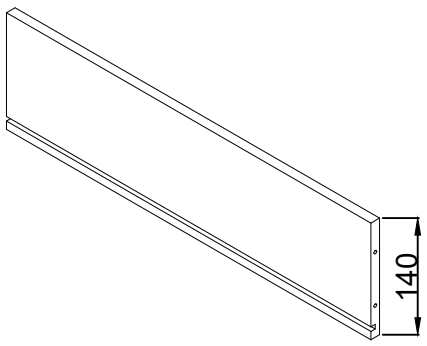

x4

26

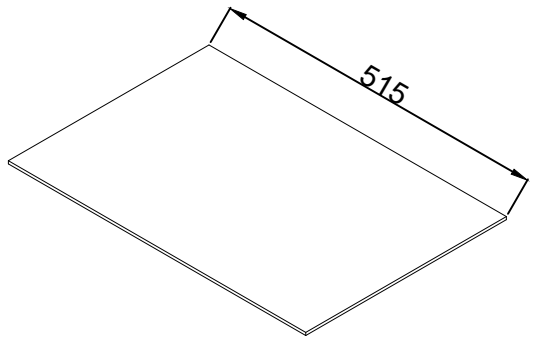

x4

27

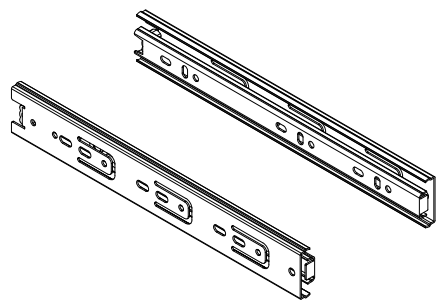

3508-10"

x4

28

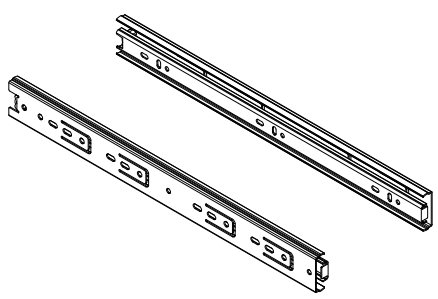

3508-14"

x4

29

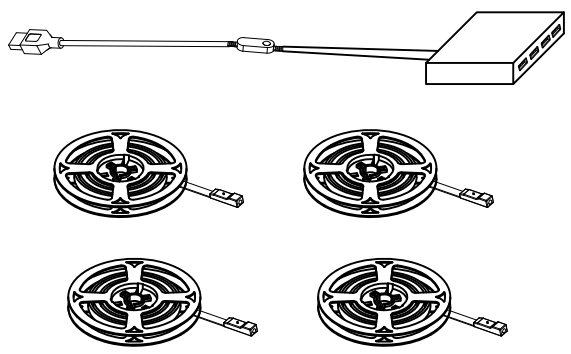

A M5x42	B Ø15x10	C Ø6x40	D M5x40	E M6x10
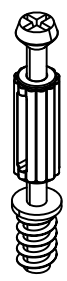		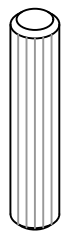	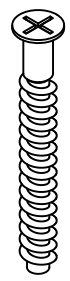	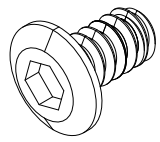
54 PCS	54 PCS	57 PCS	44 PCS	10 PCS
F M3.5x12	G	H φ30*3	4#	
	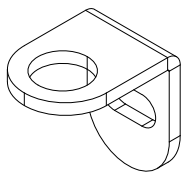	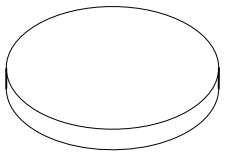		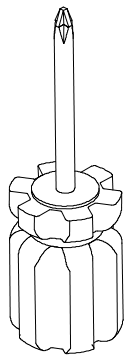
74 PCS	10 PCS	8 PCS		

Slides Must Be Separated Before Assembly.
After Separated, Set Aside Until Needed for Assembly.

Las diapositivas deben separarse antes del montaje.
Después de la separación, déjelo a un lado hasta que sea necesario.

Les glissières doivent être séparées avant l'assemblage.
Après la séparation, mettez de côté jusqu'au moment de l'assemblage.

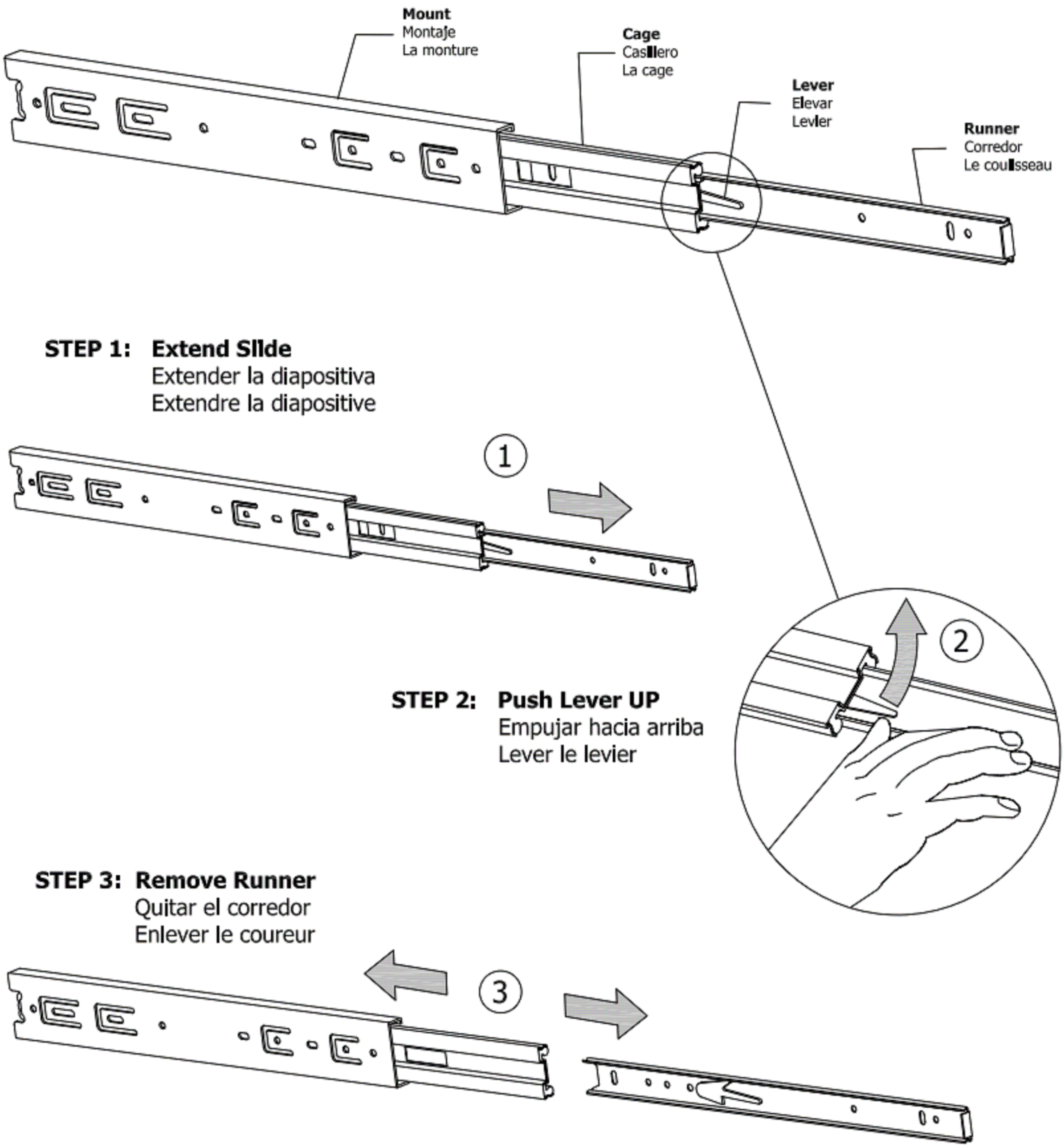

STEP 1: Extend Slide
Extender la diapositiva
Extendre la diapositive

STEP 2: Push Lever UP
Empujar hacia arriba
Lever le levier

STEP 3: Remove Runner
Quitar el corredor
Enlever le coureur

1

F M3.5x12

8 PCS

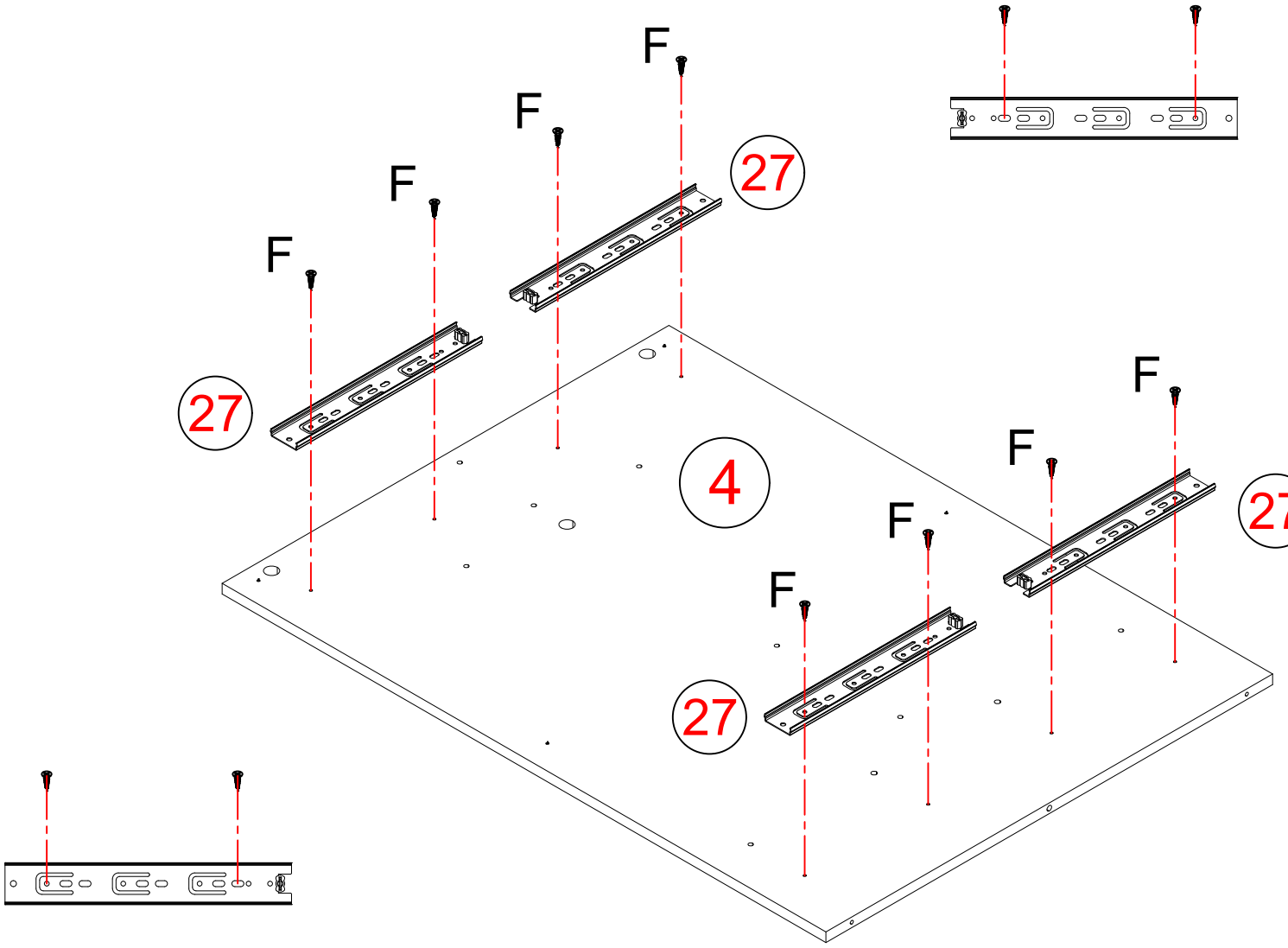

2

A M5x42

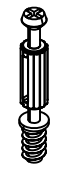

8 PCS

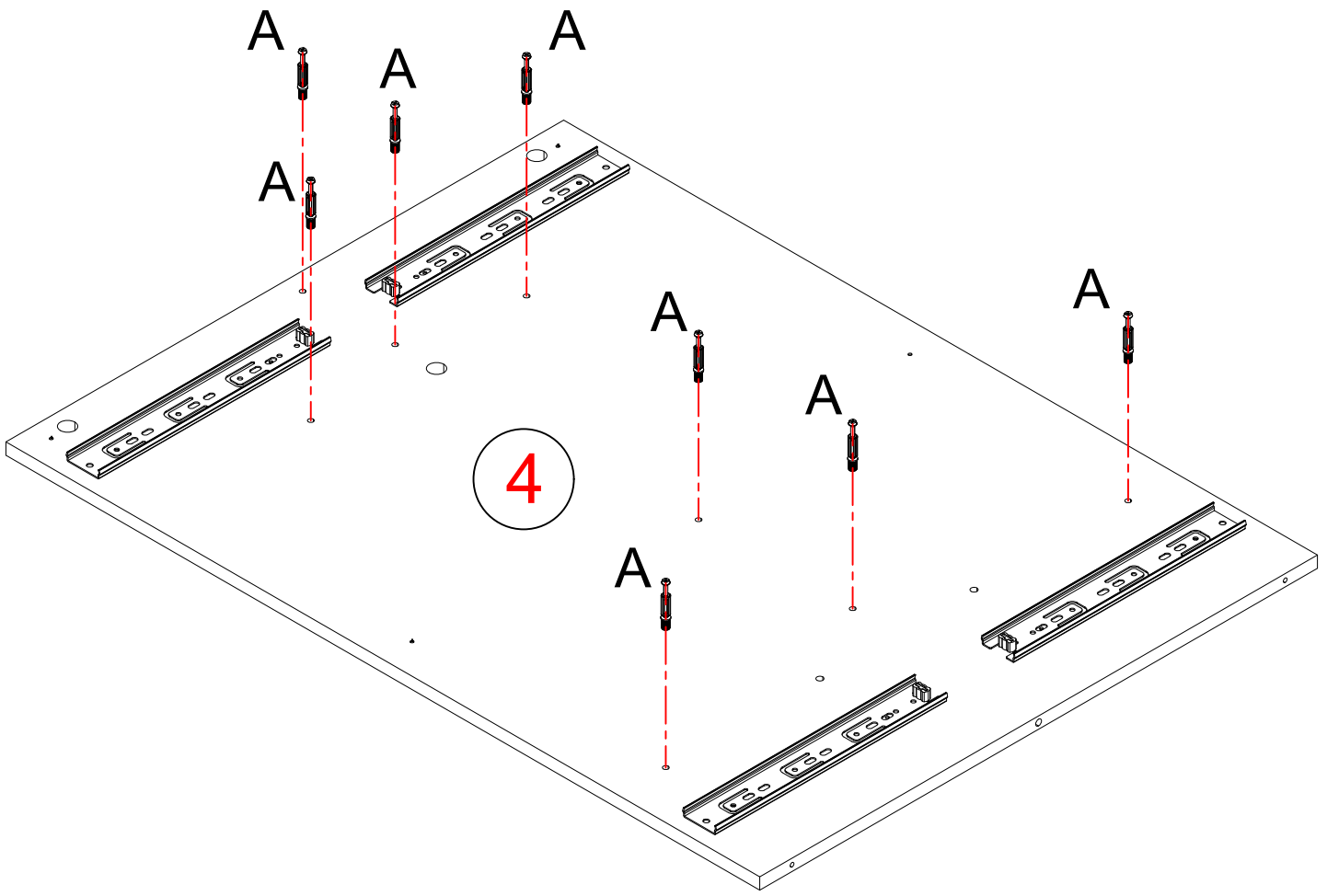

3

G M3.5x12	F M3.5x12
4 PCS	4 PCS

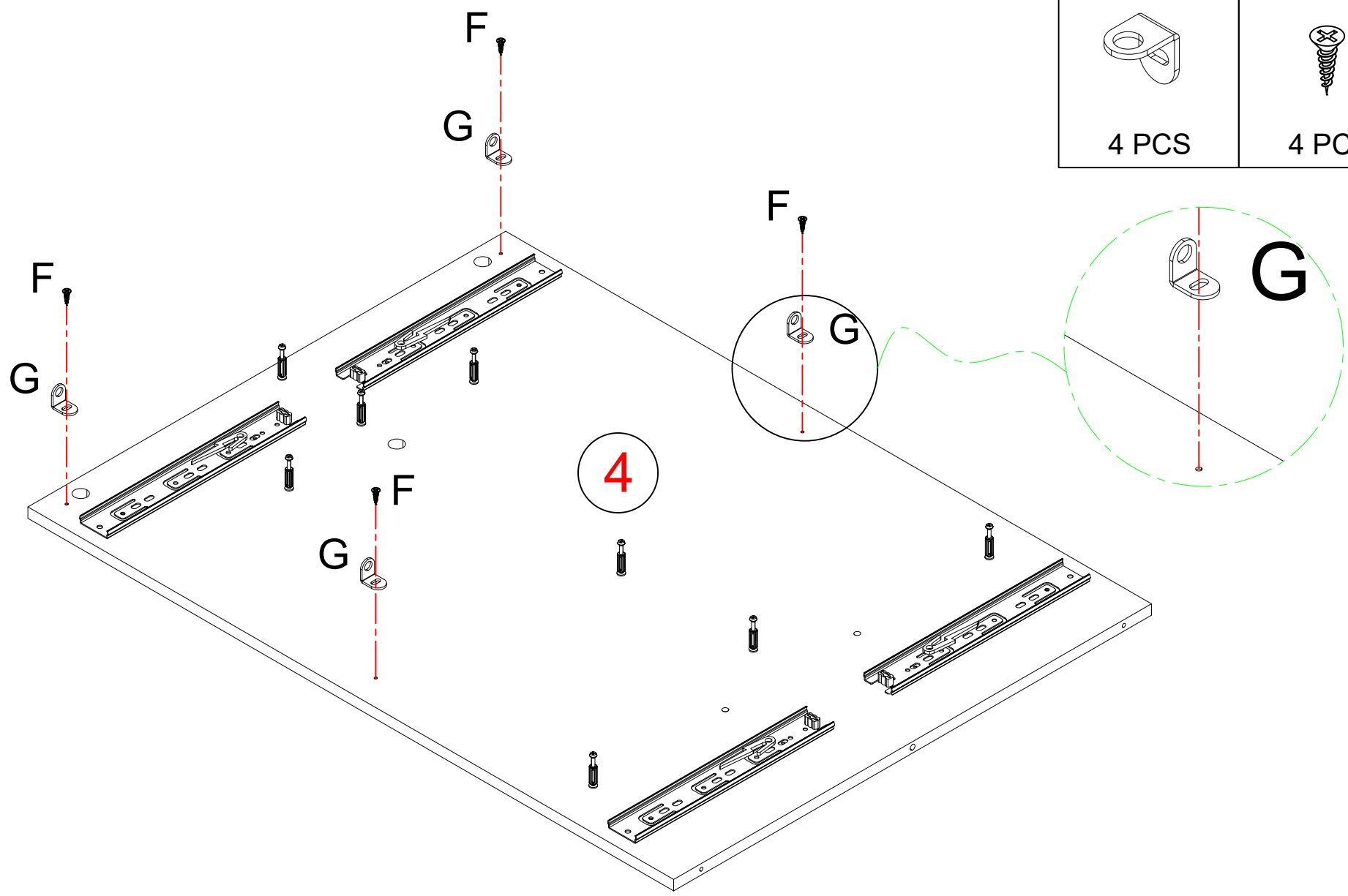

4

A M5x42
6 PCS

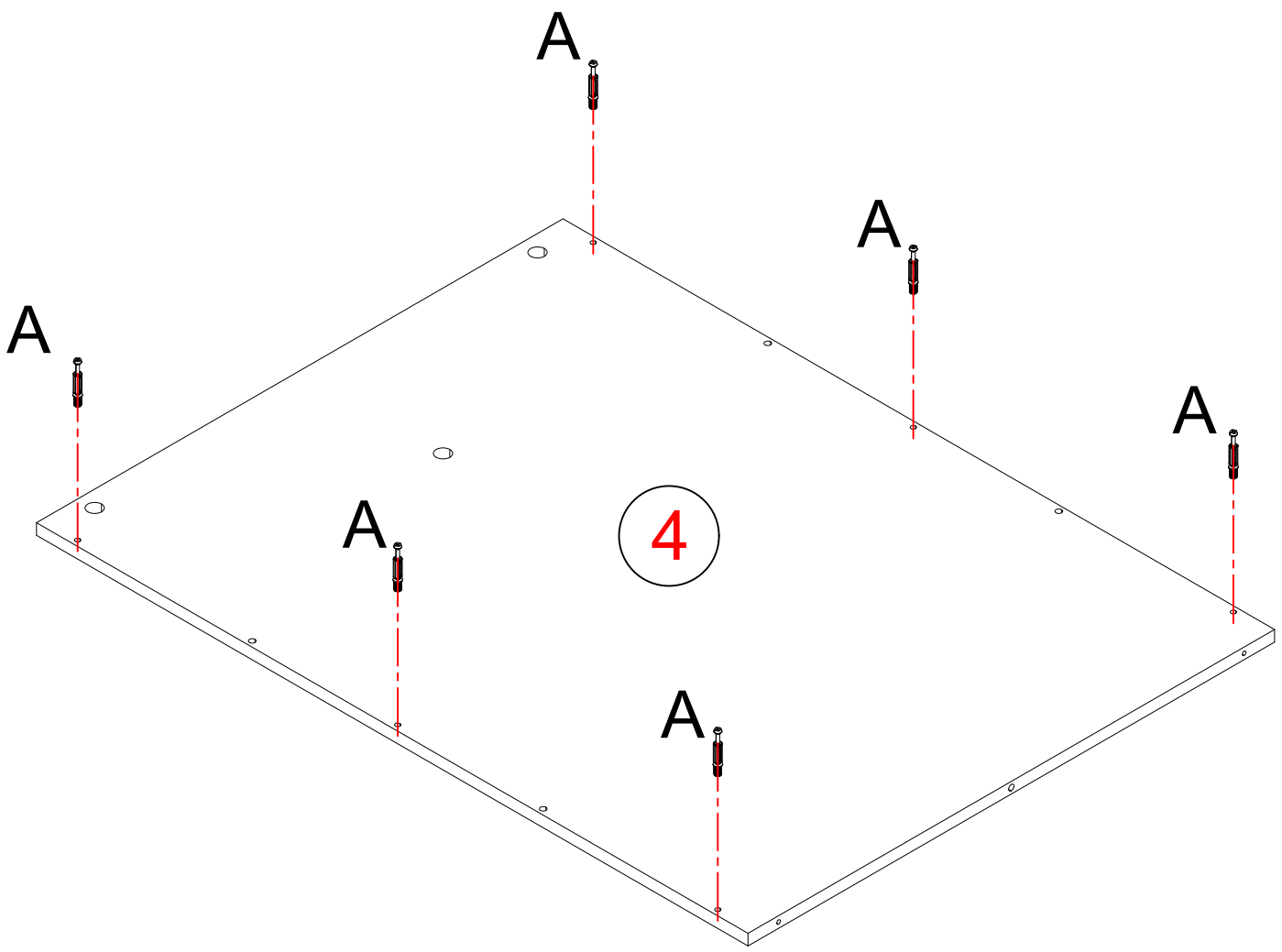

5

F M3.5x12

8 PCS

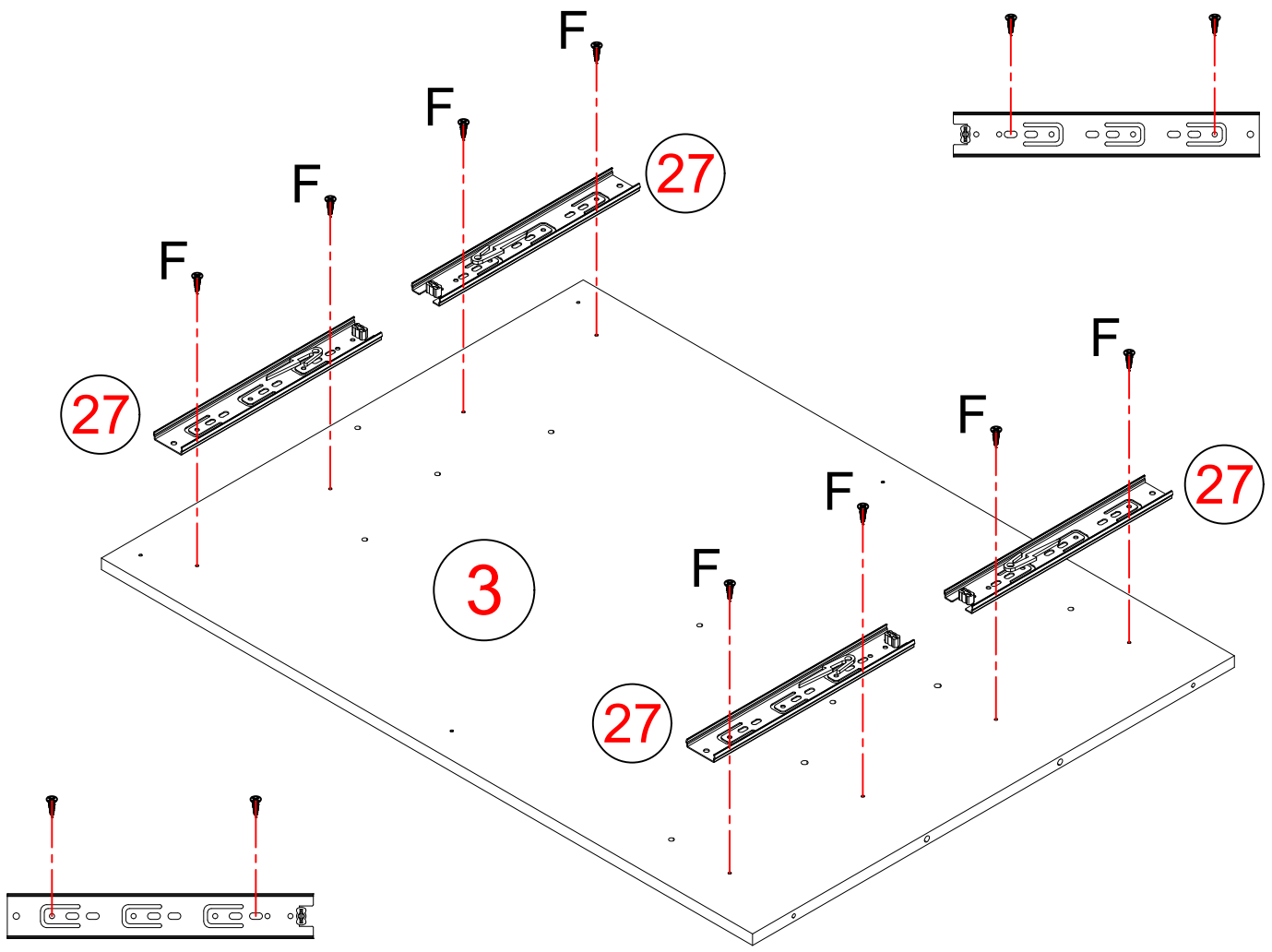

6

A M5x42

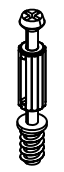

8 PCS

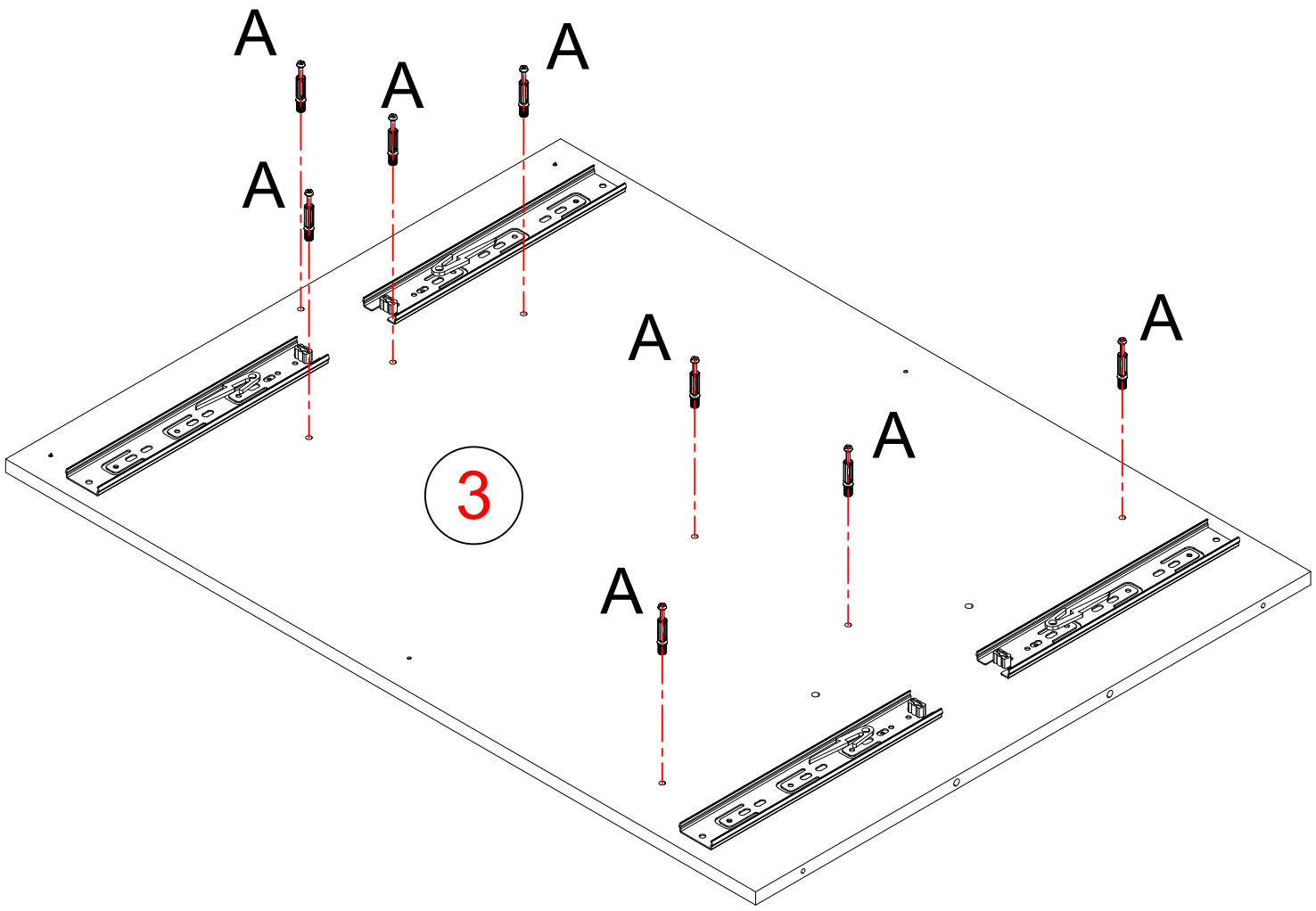

7

G M3.5x12	F M3.5x12
4 PCS	4 PCS

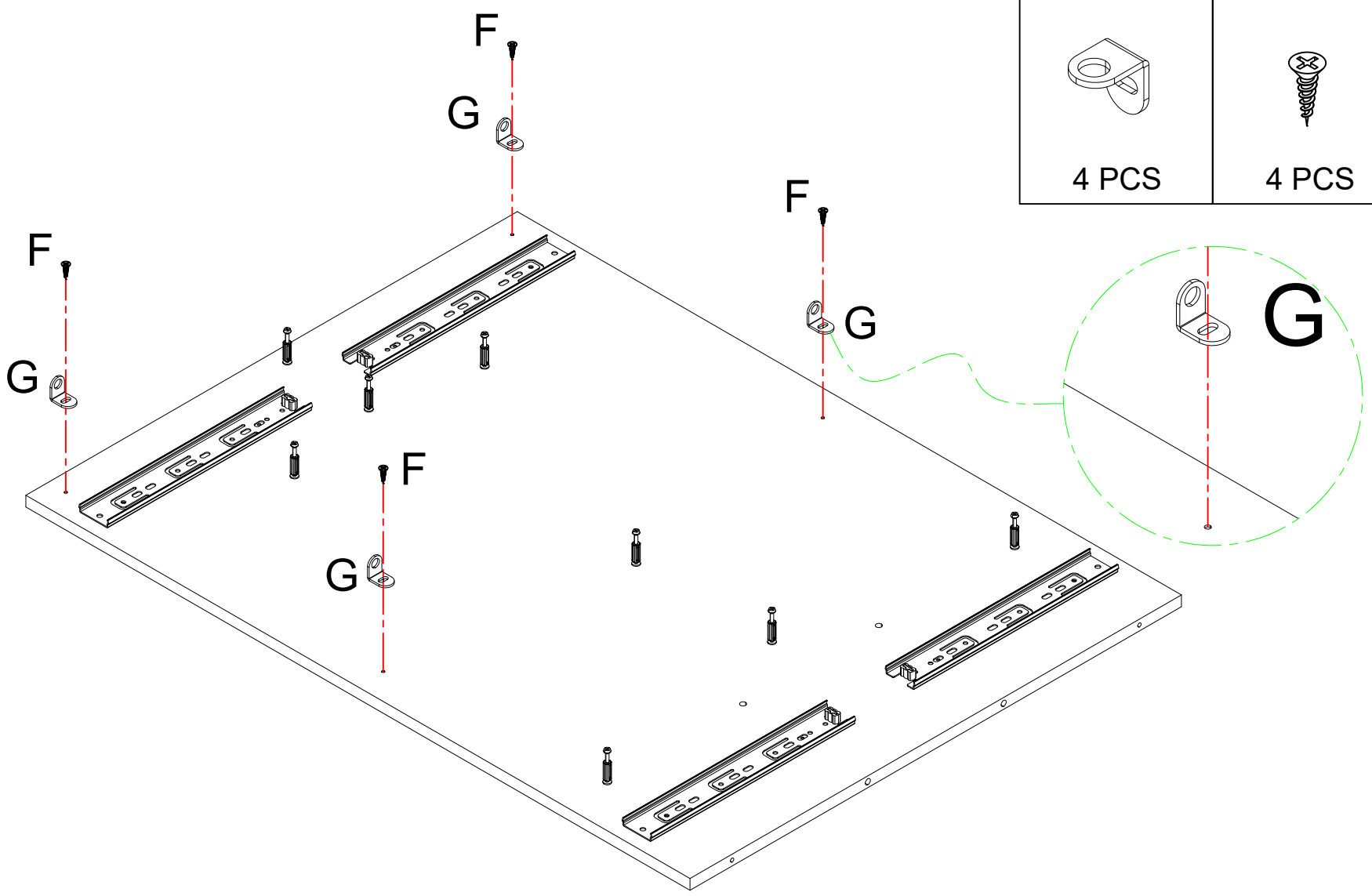

8

C Ø6x40
2 PCS

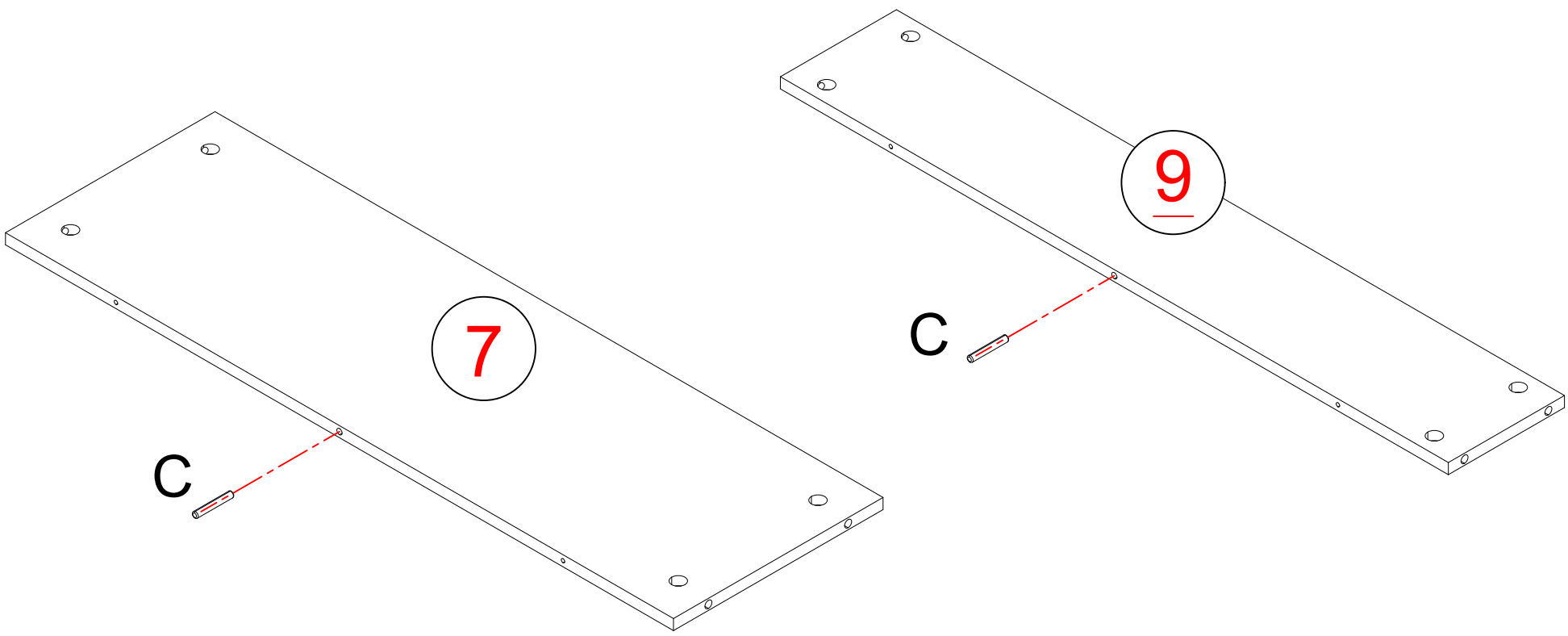

9

D M5x40

2 PCS

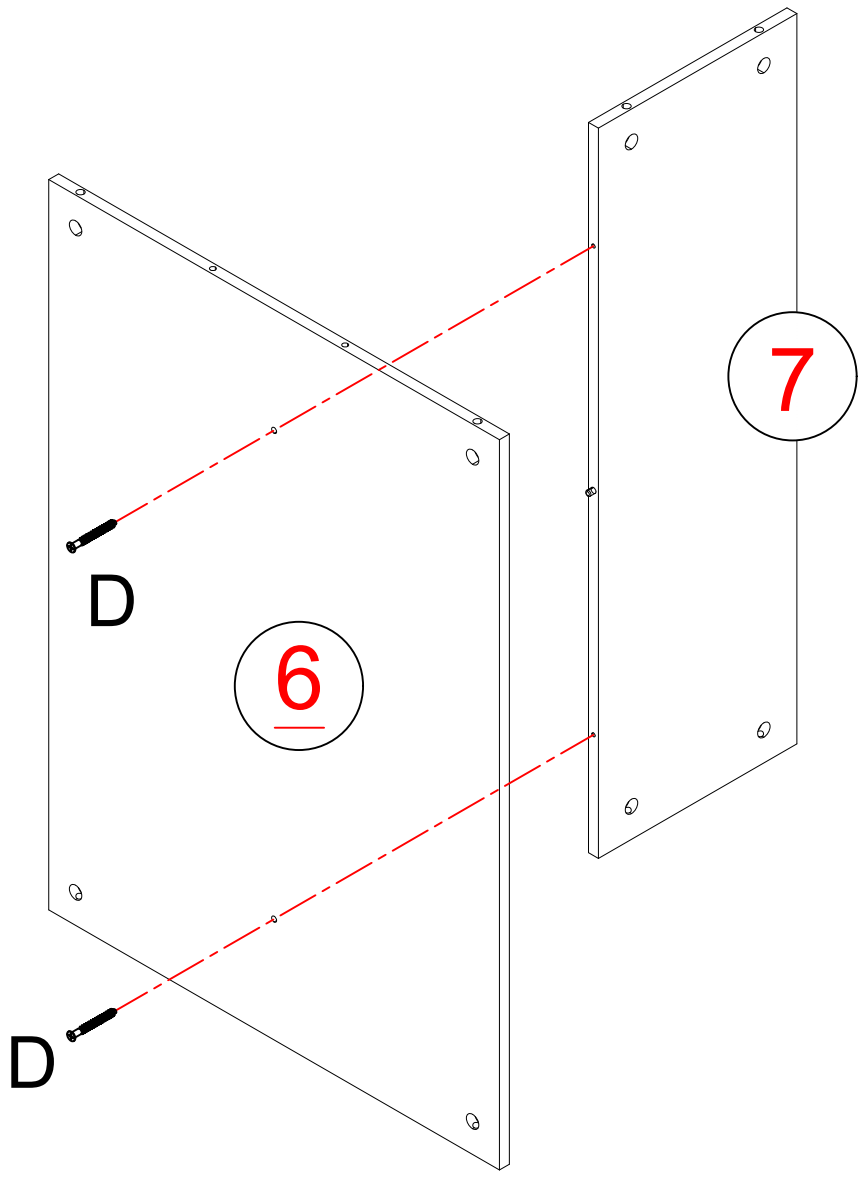

10

D M5x40

2 PCS

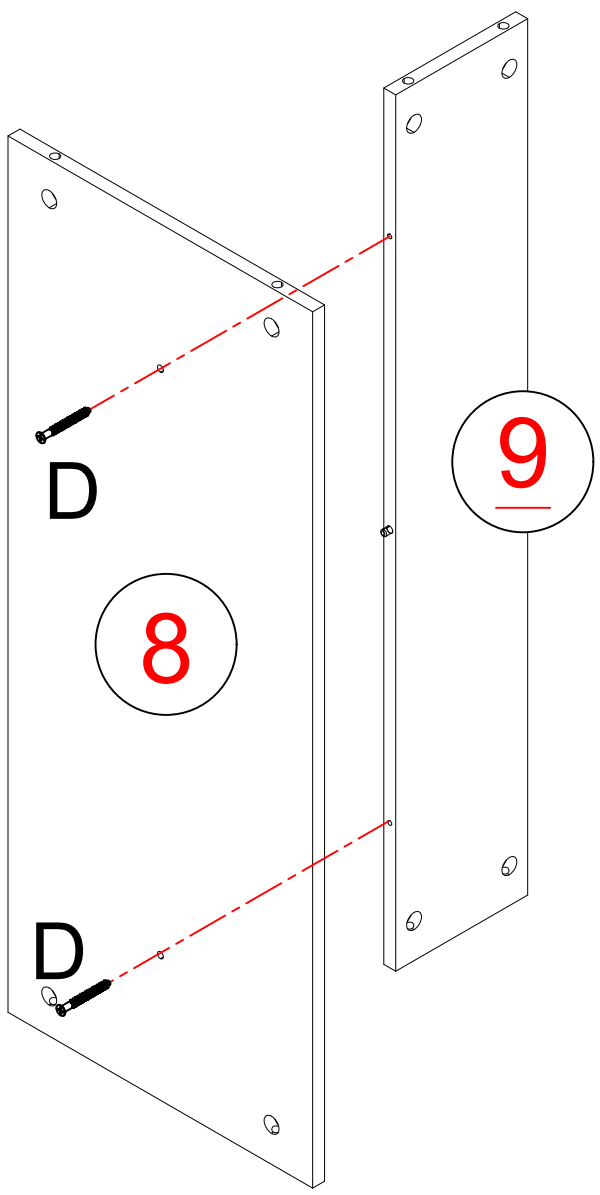

11

C Ø6x40

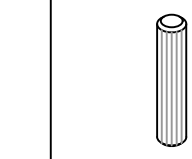

4 PCS

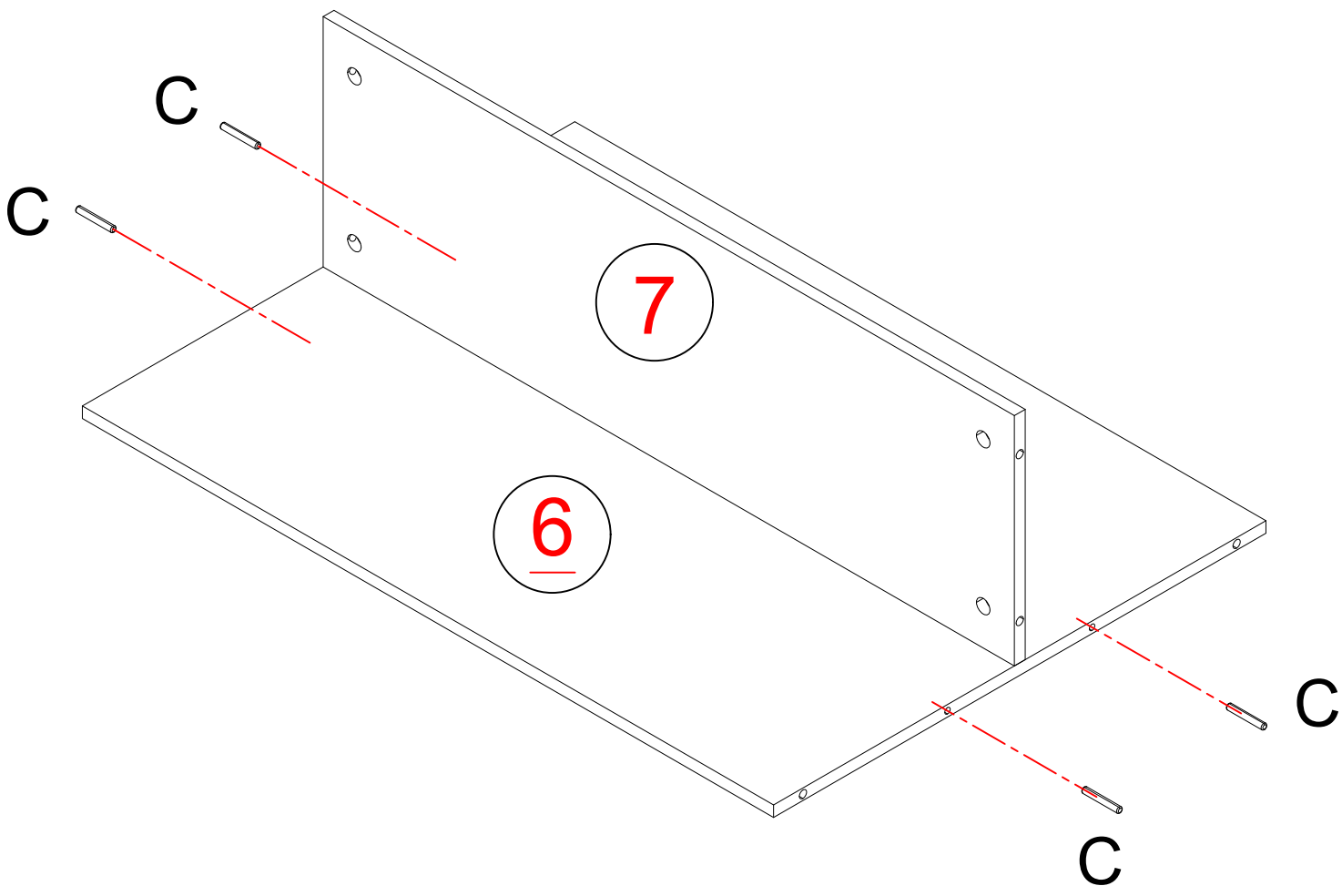

12

B Ø15x10



8 PCS

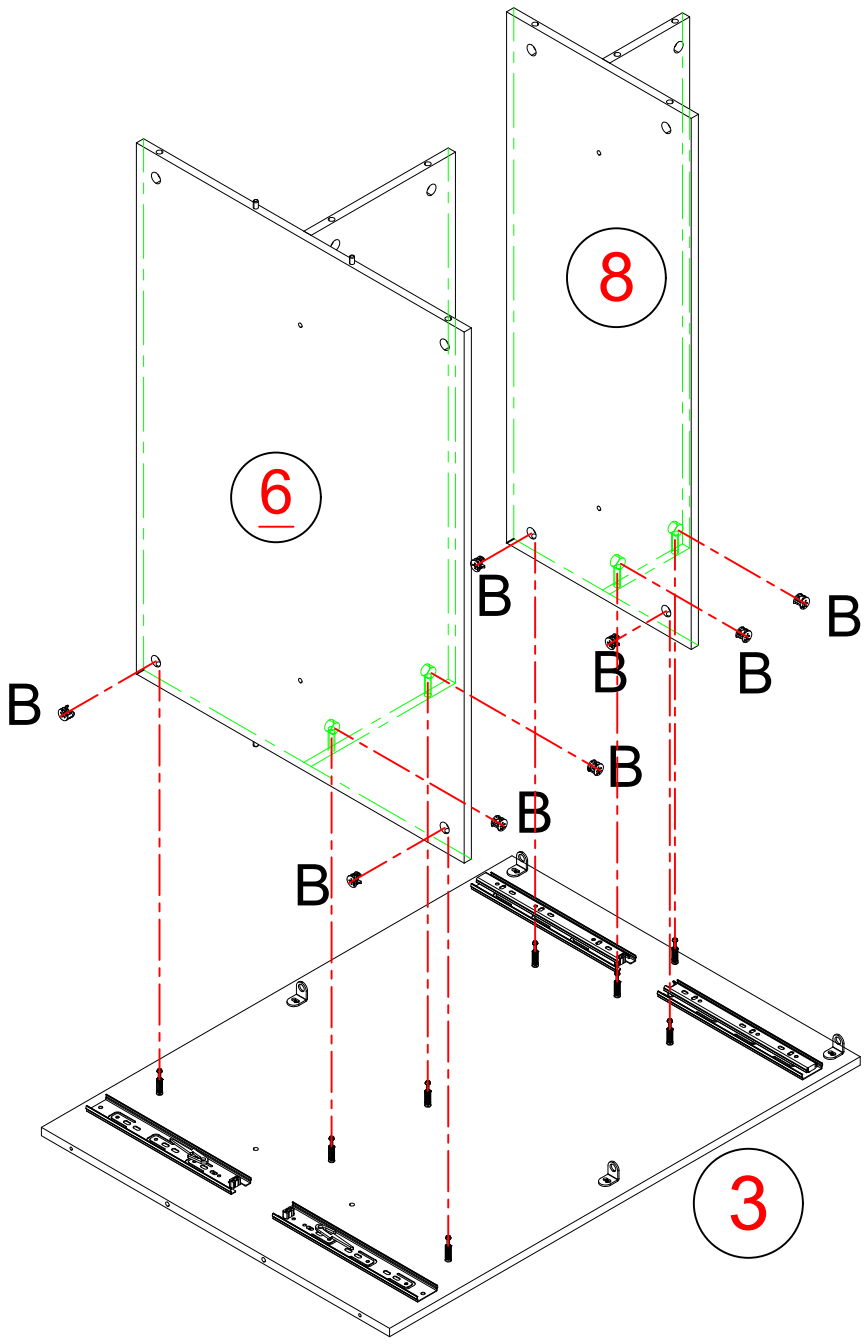

13

B Ø15x10



8 PCS

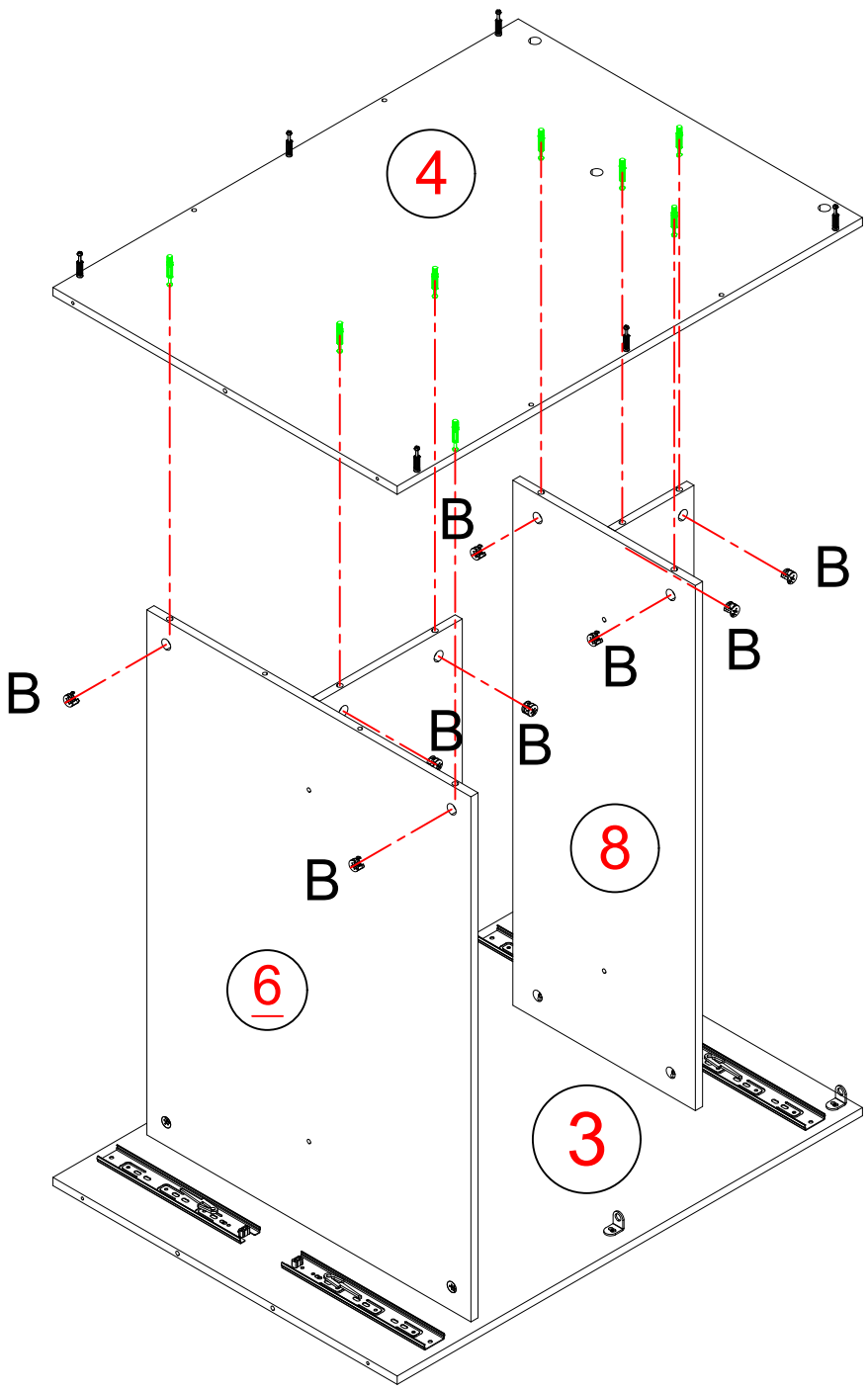

14

Flip to this perspective

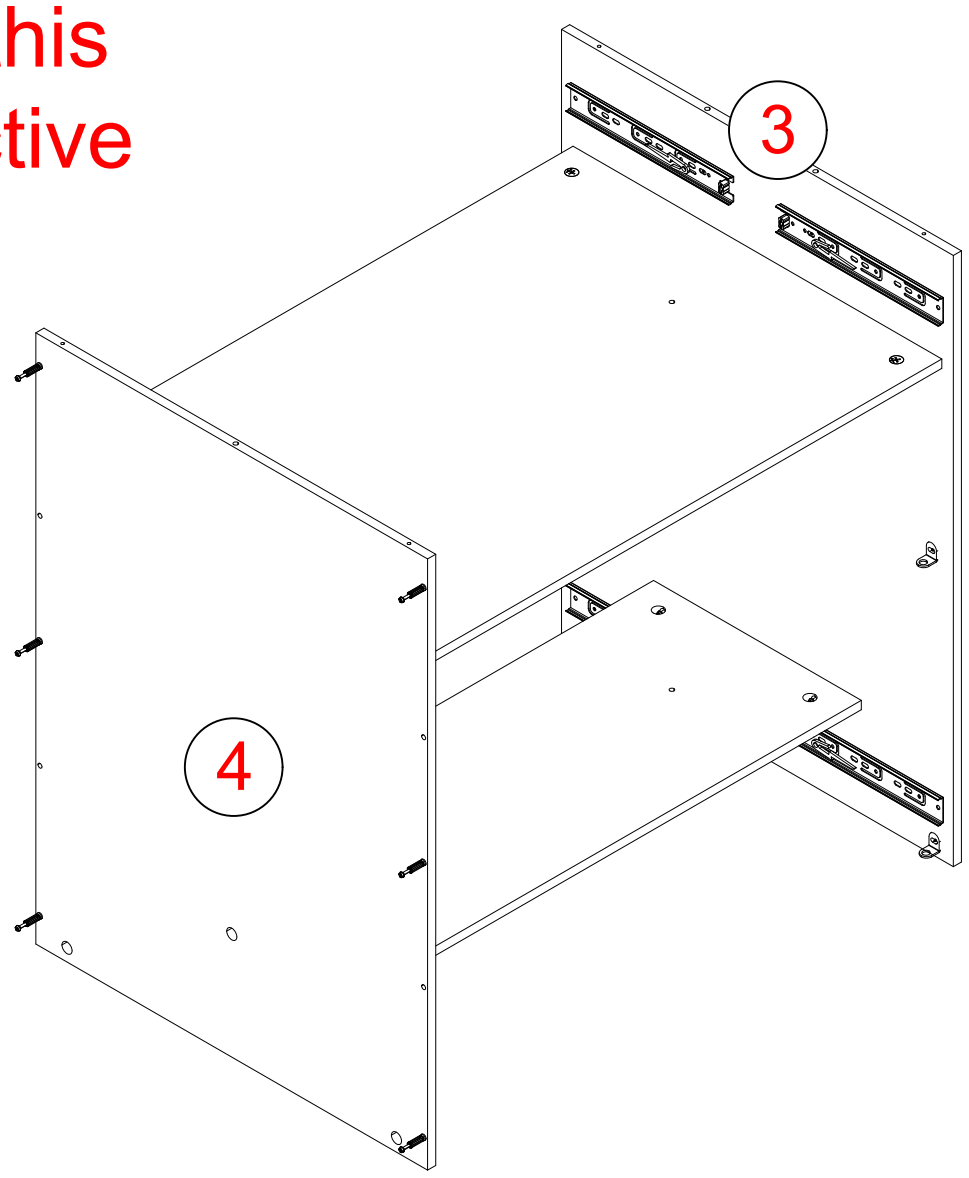

15

F M3.5x12

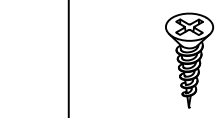

8 PCS

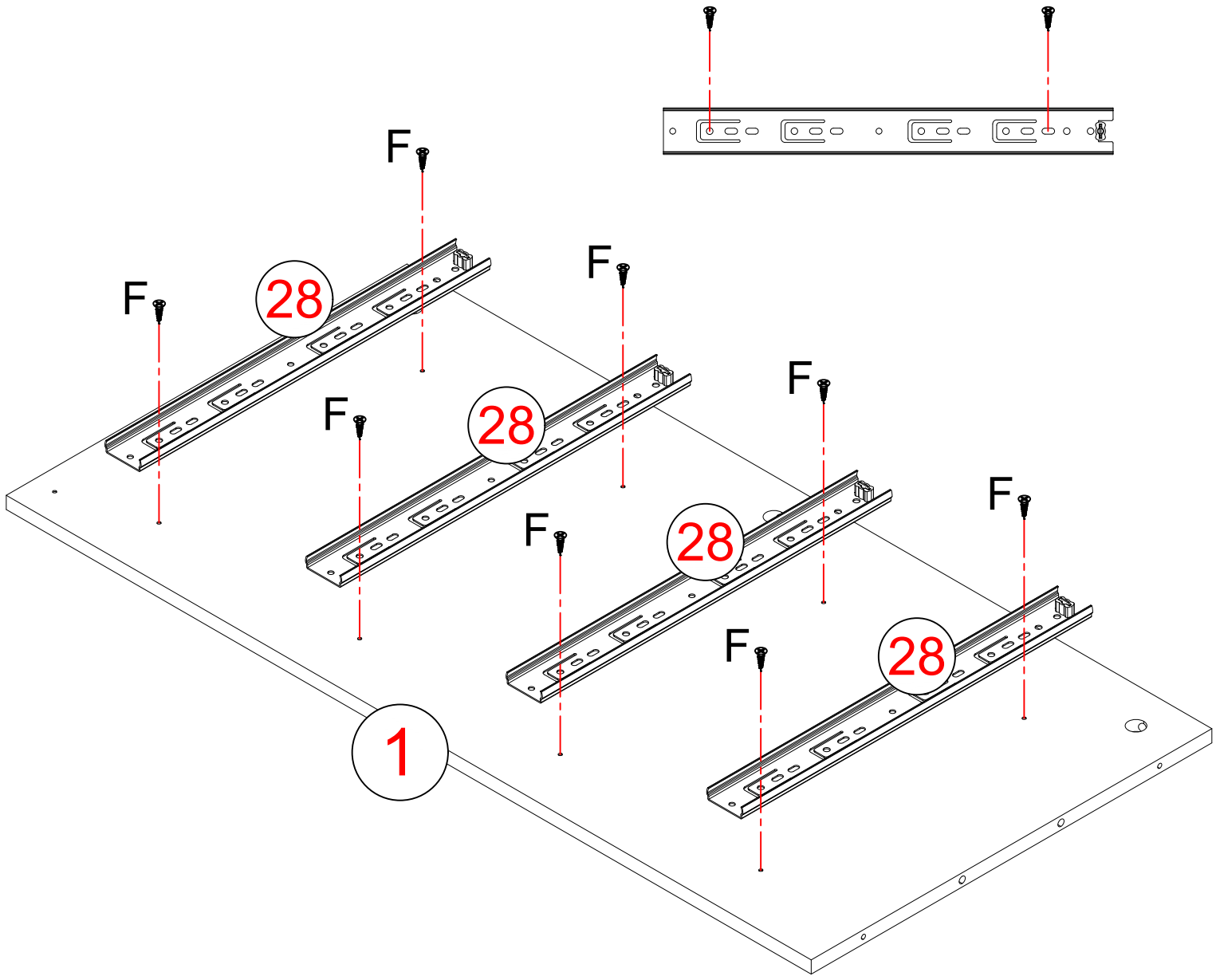

16

F M3.5x12

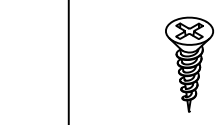

8 PCS

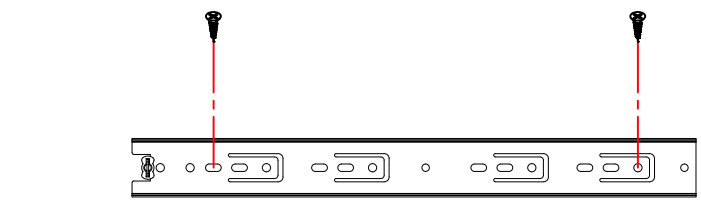

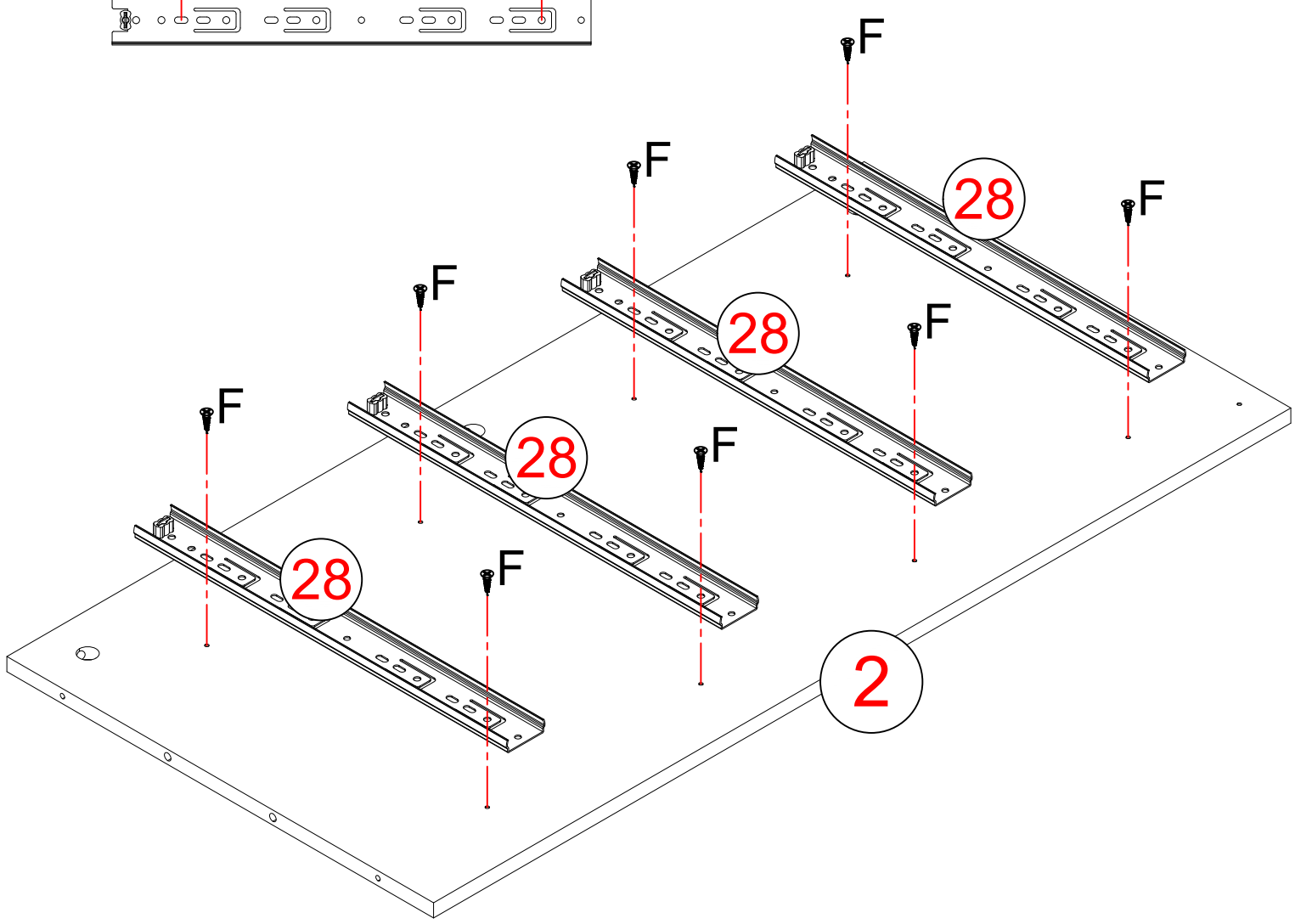

17

G M3.5x12	F M3.5x12
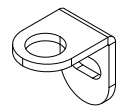	
2 PCS	2 PCS

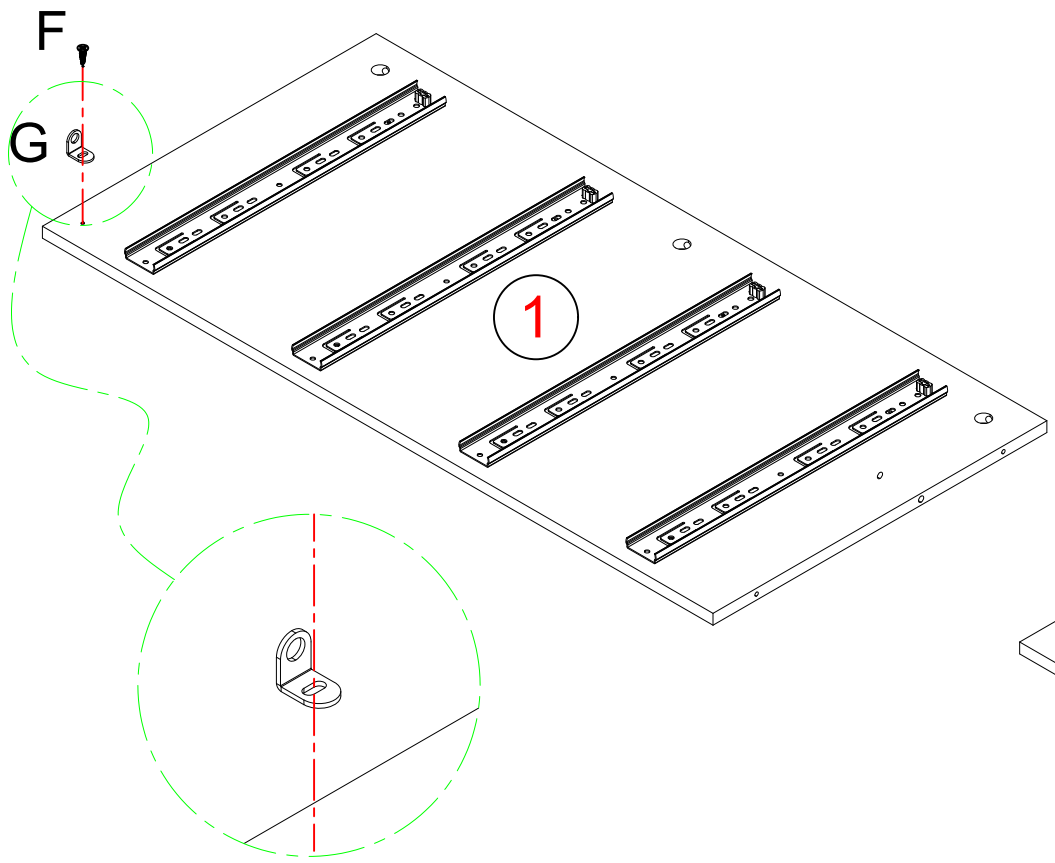

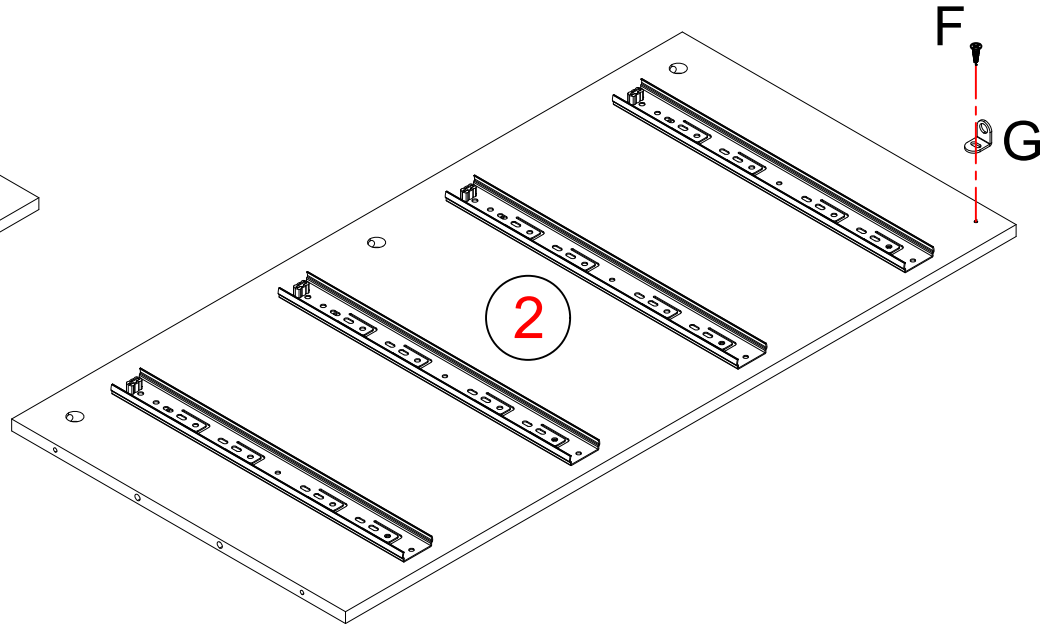

18

C Ø6x40
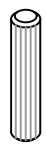
4 PCS

19

B Ø15x10



3 PCS

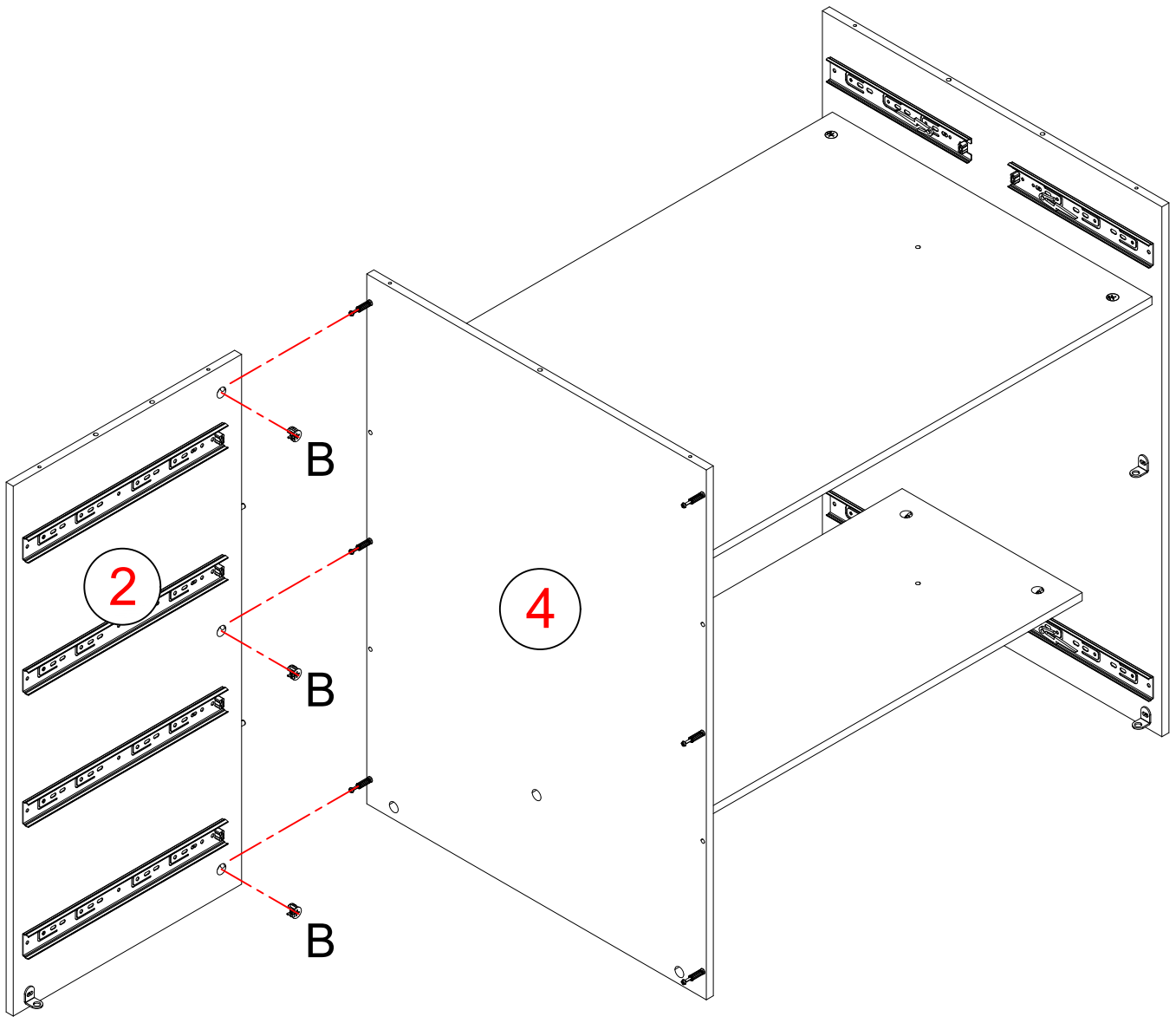

20

B Ø15x10



3 PCS

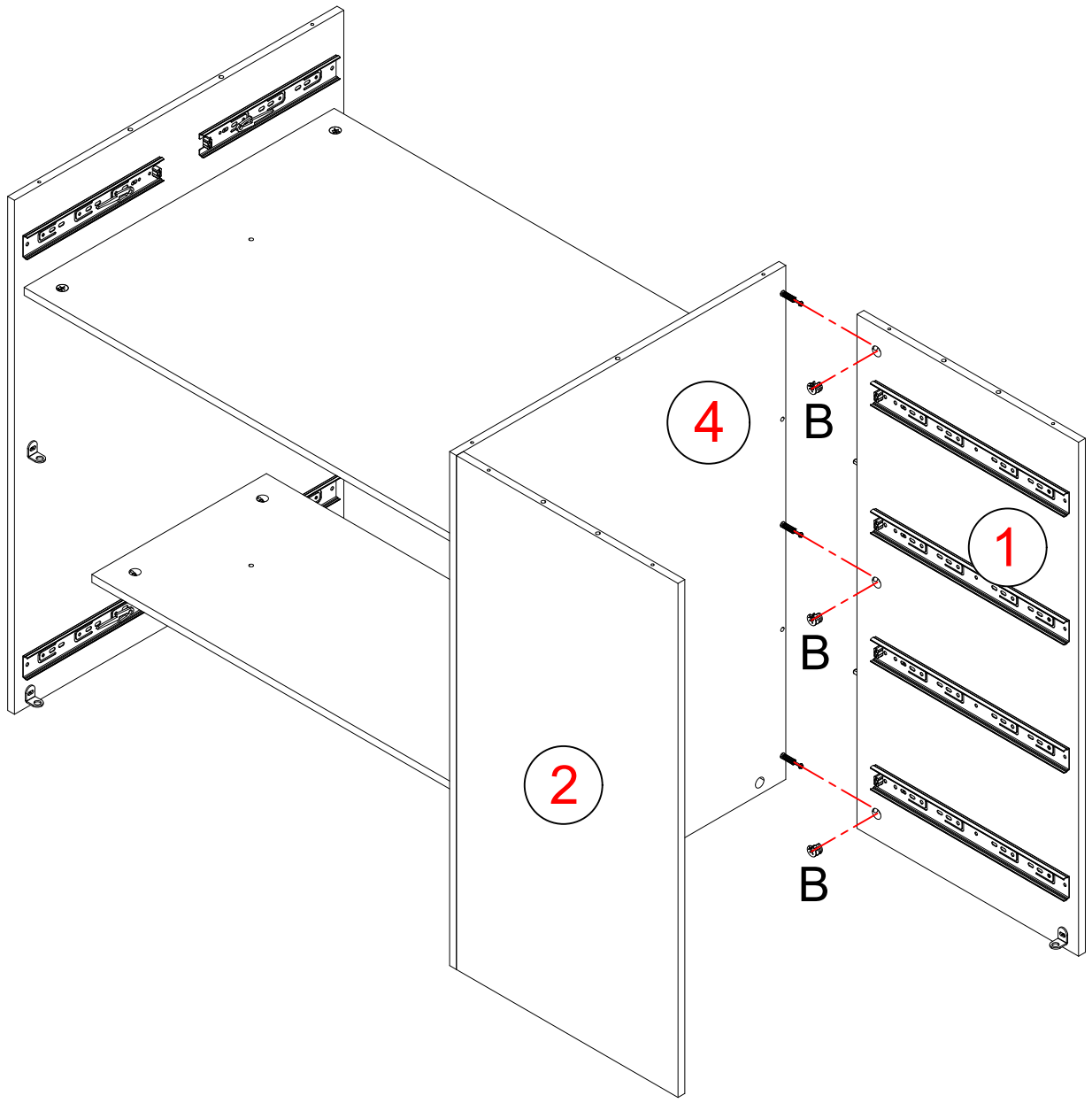

21

C Ø6x40

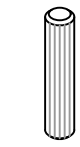

7 PCS

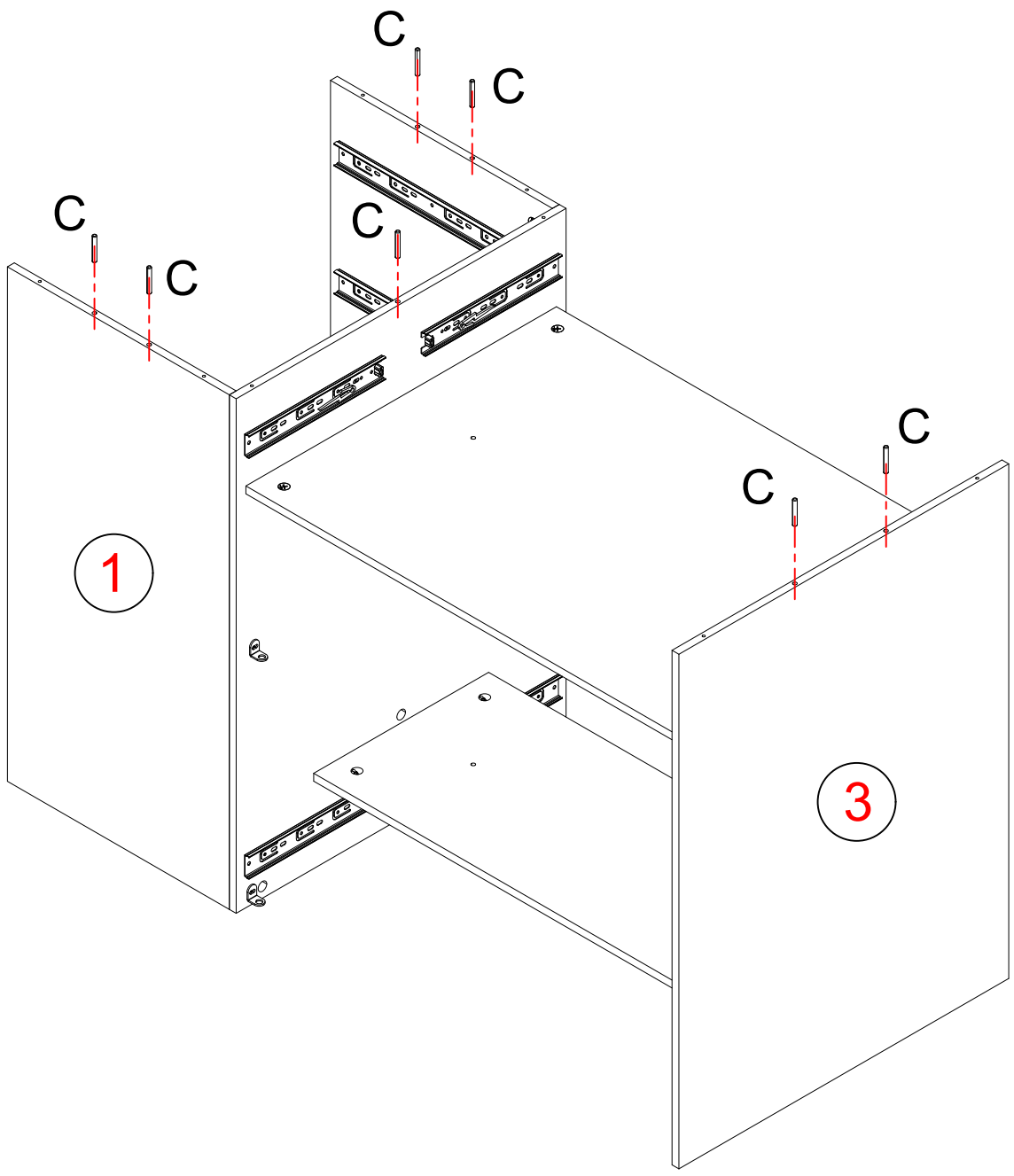

22

D M5x40

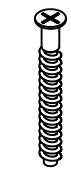

8 PCS

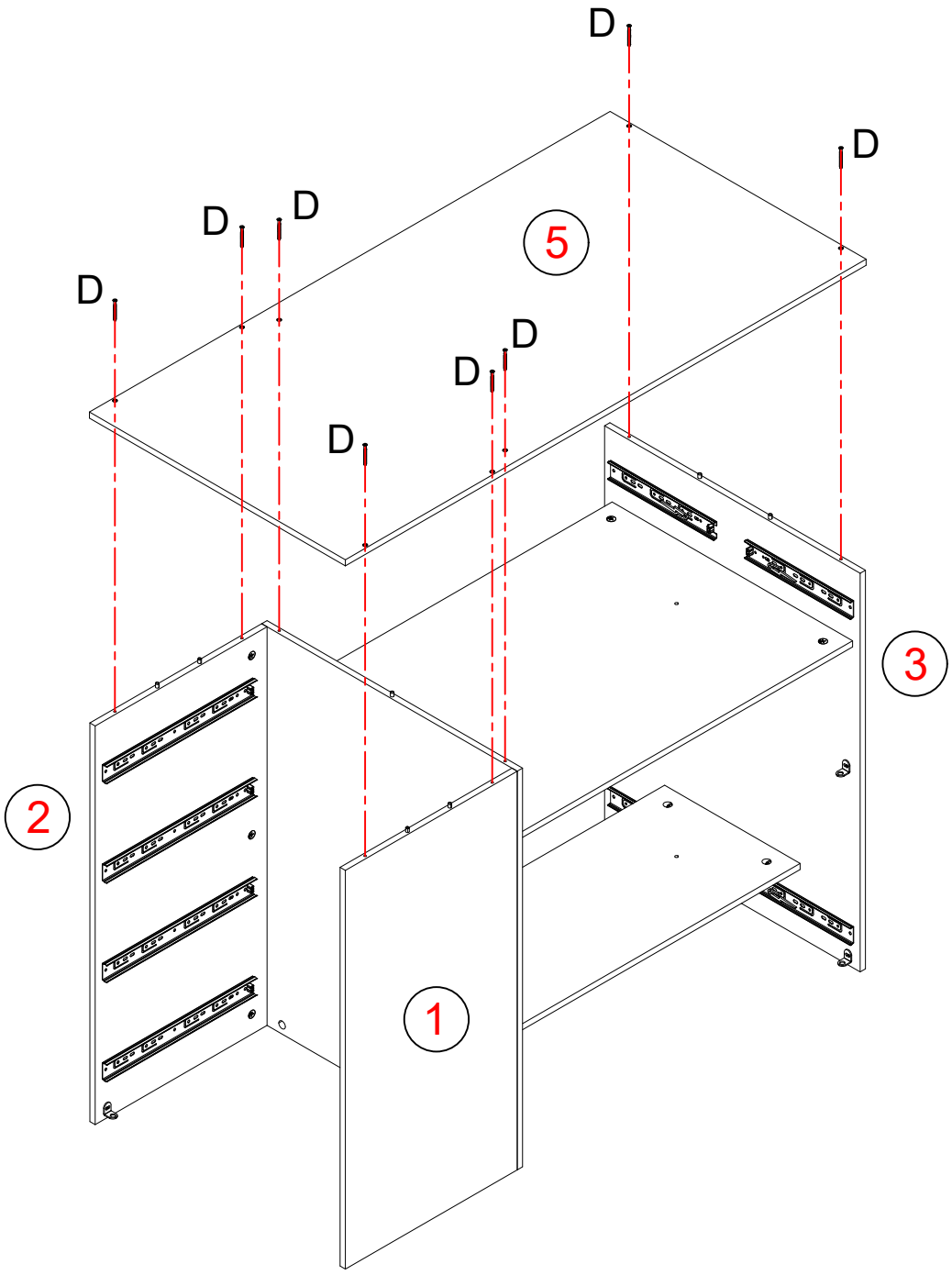

23

H φ30*3

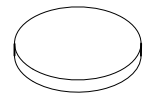

8 PCS

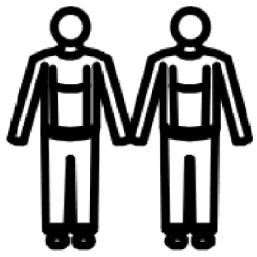

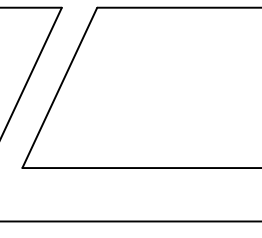

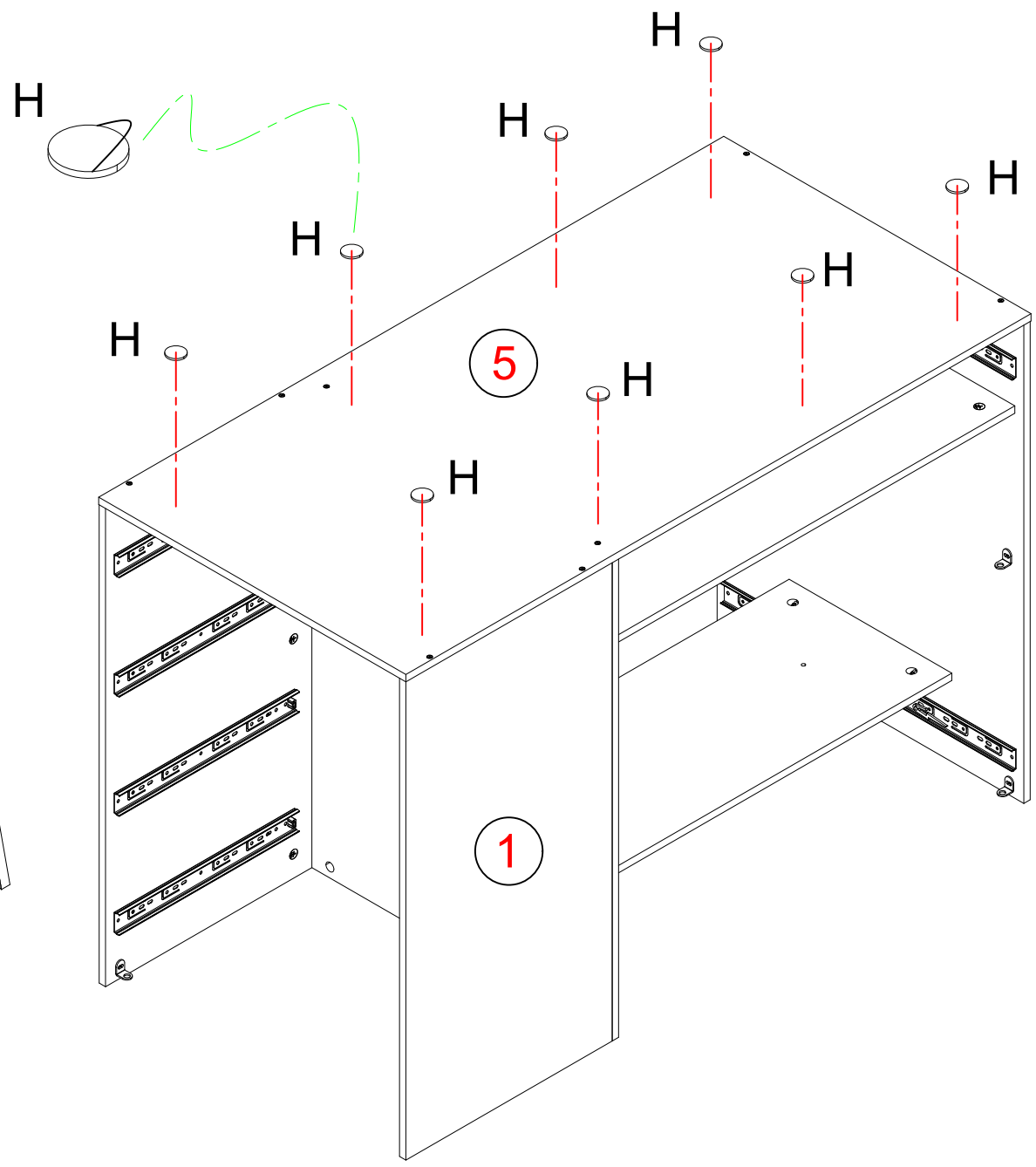

24

E M6x10



4 PCS

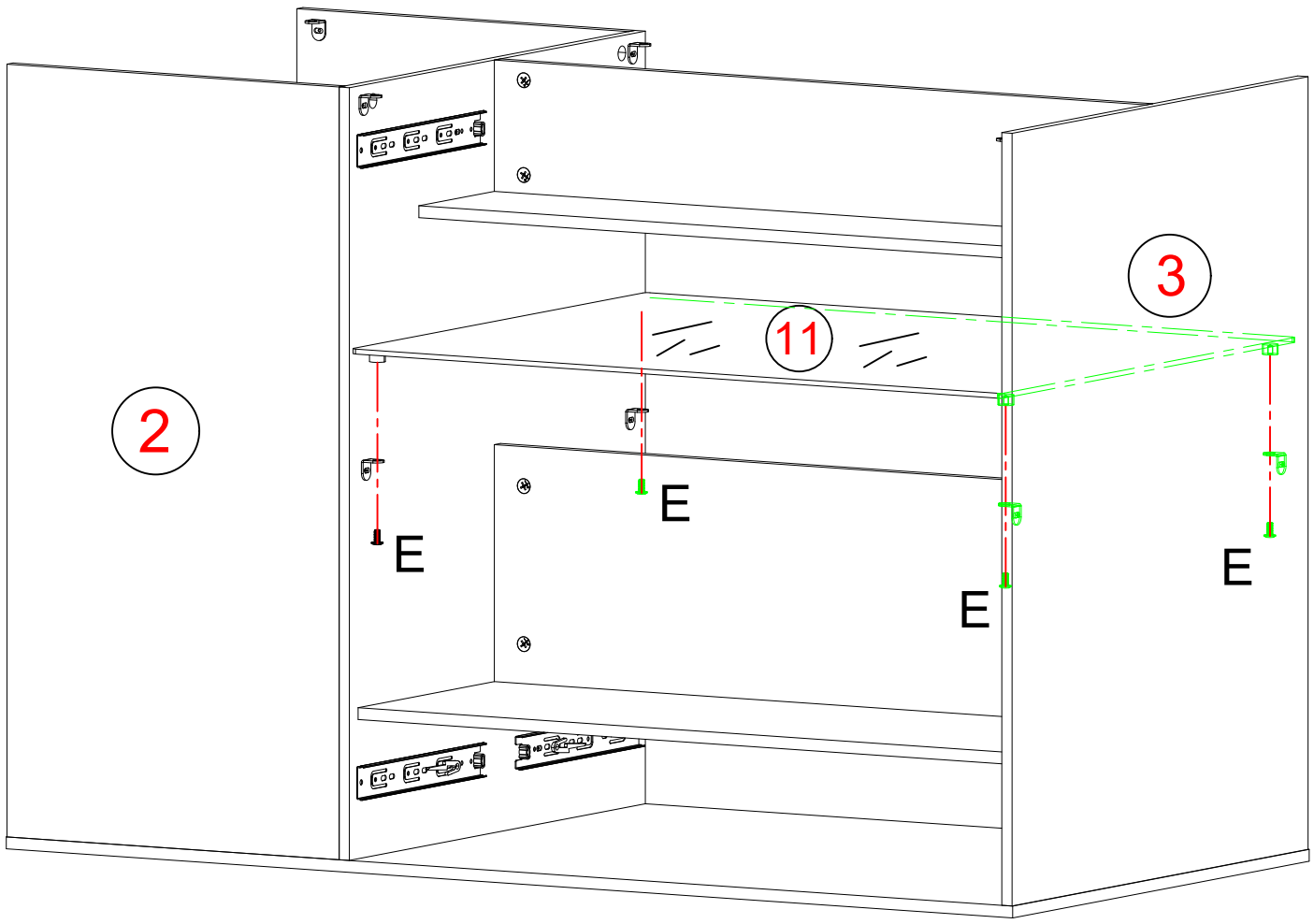

25

Tear off the tape and apply it to the plate,Then press it firmly with your hand

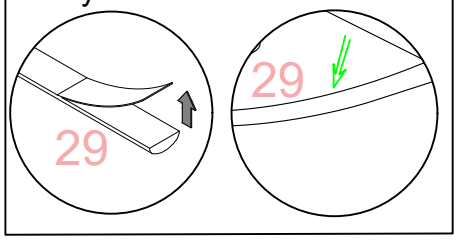

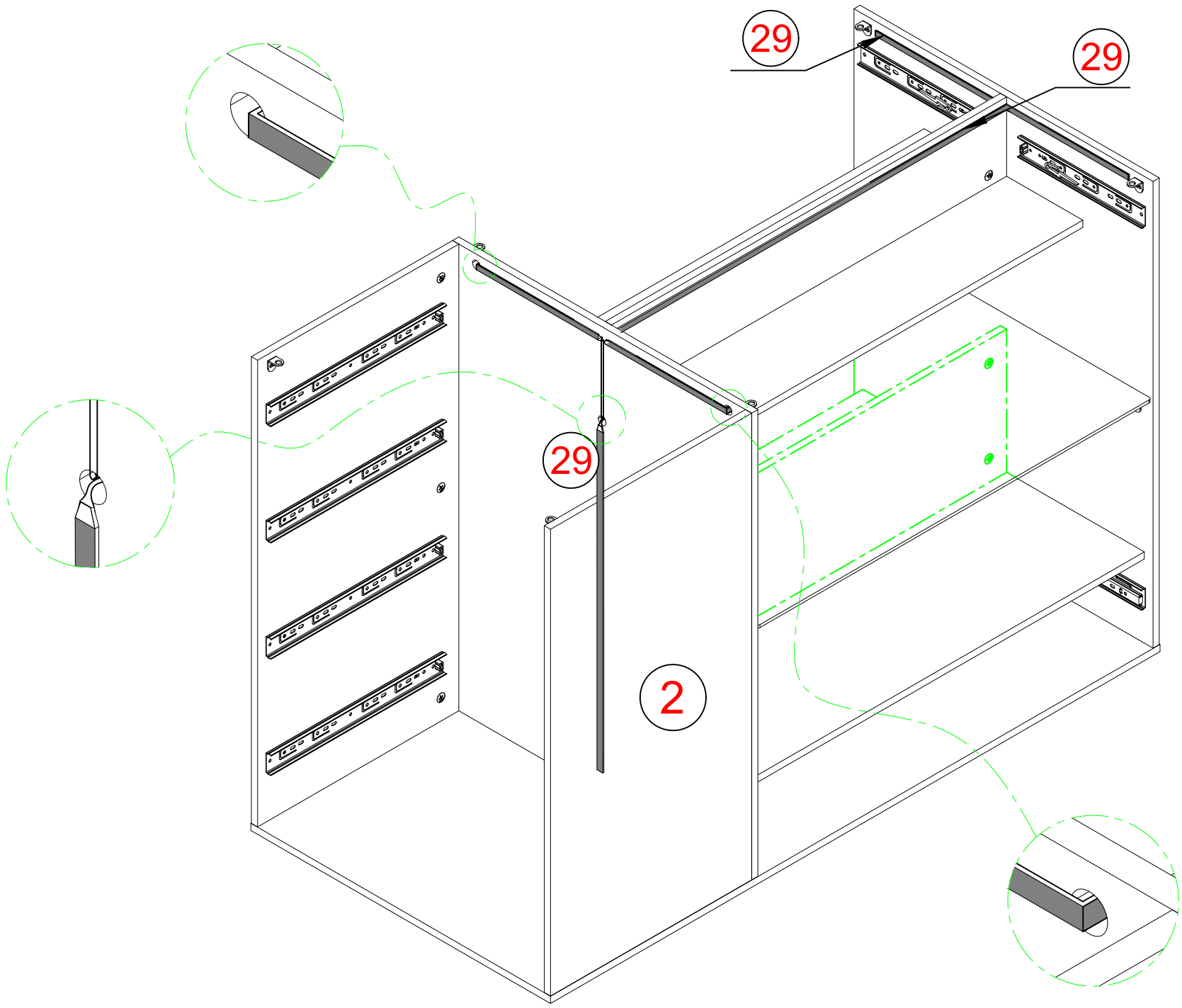

Schematic diagram of long strip paste

26

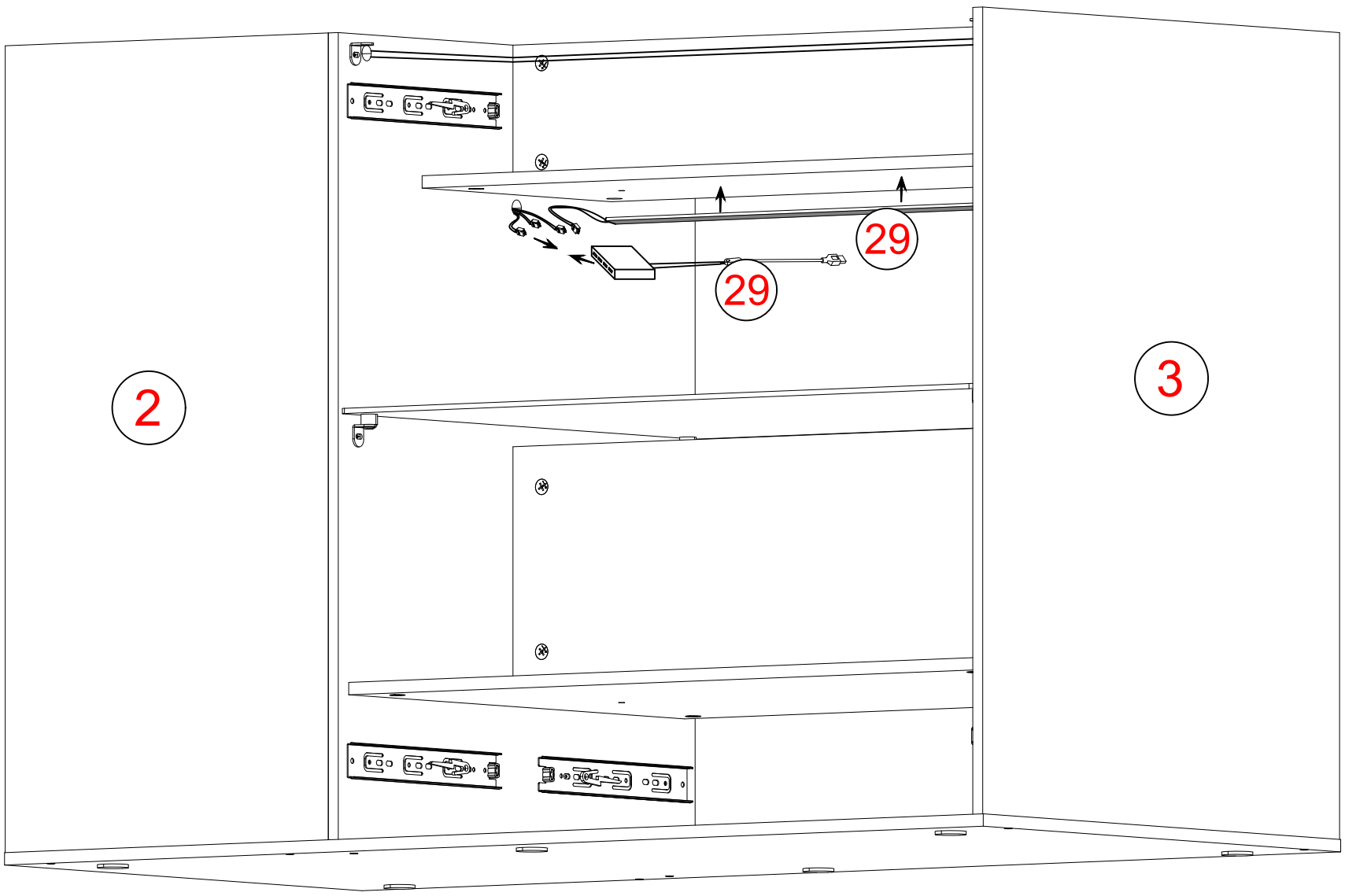

27

E M6x10

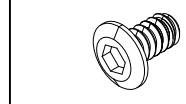

6 PCS

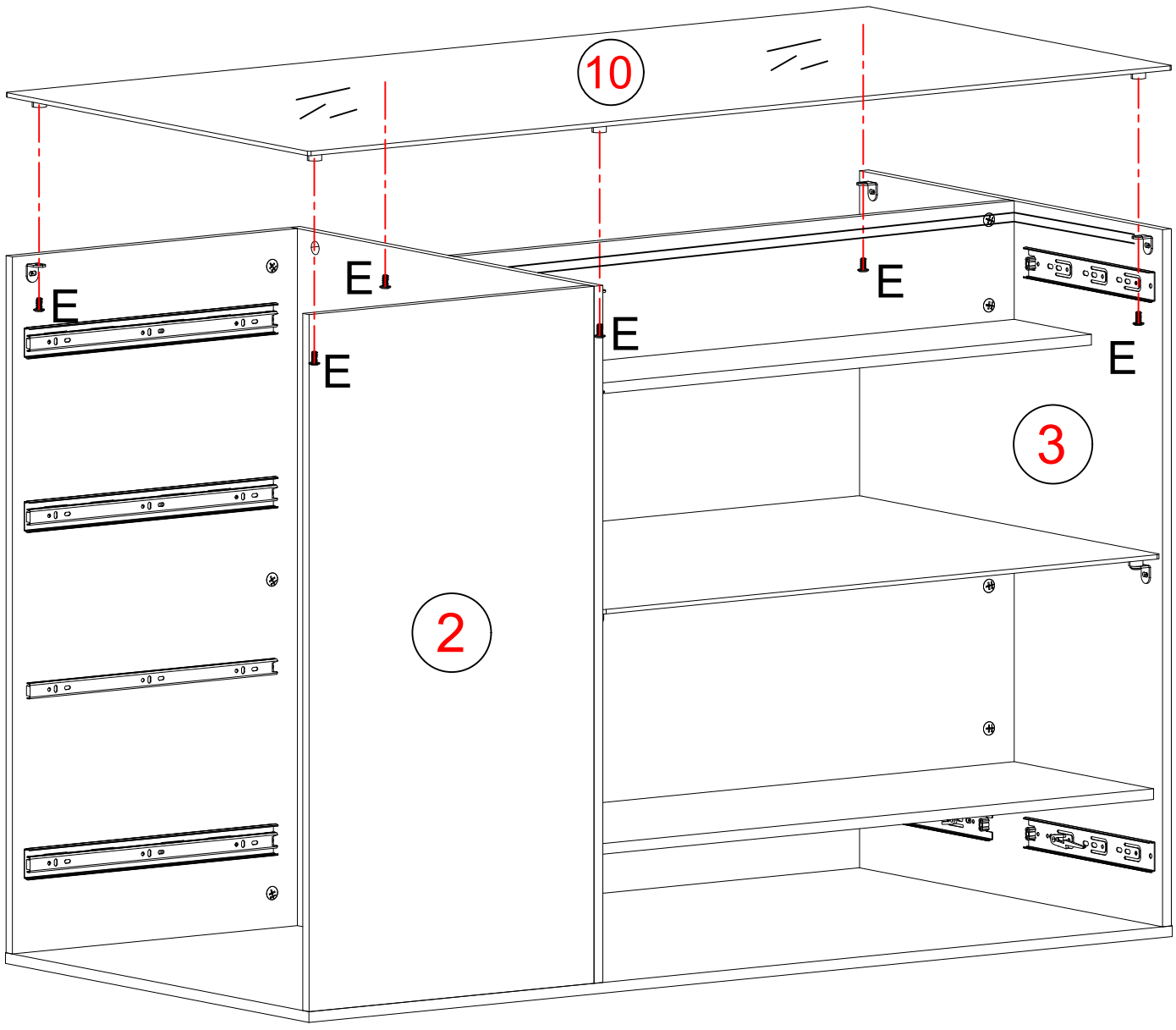

28

D M5x40

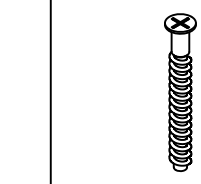

8 PCS

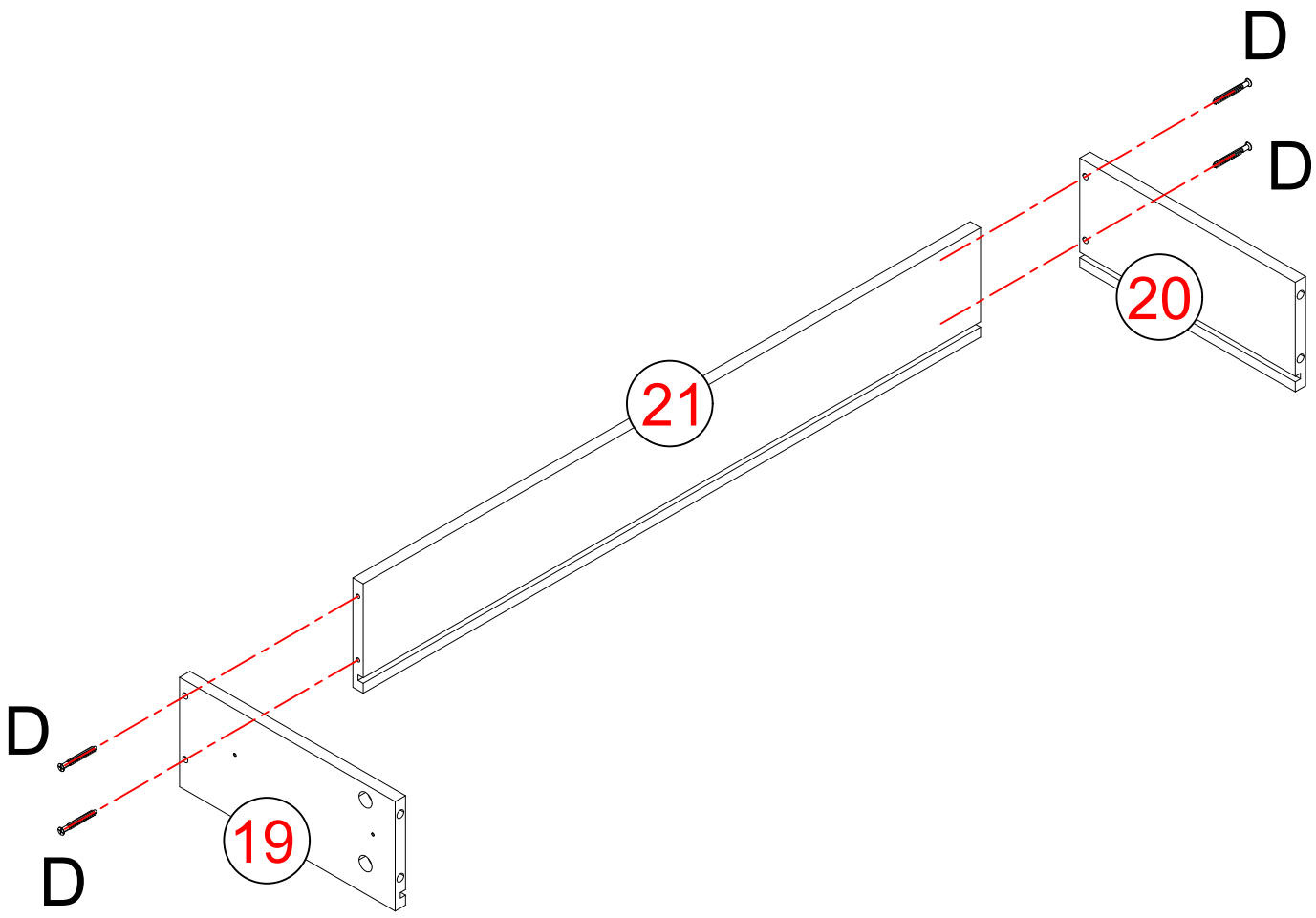

x2

29

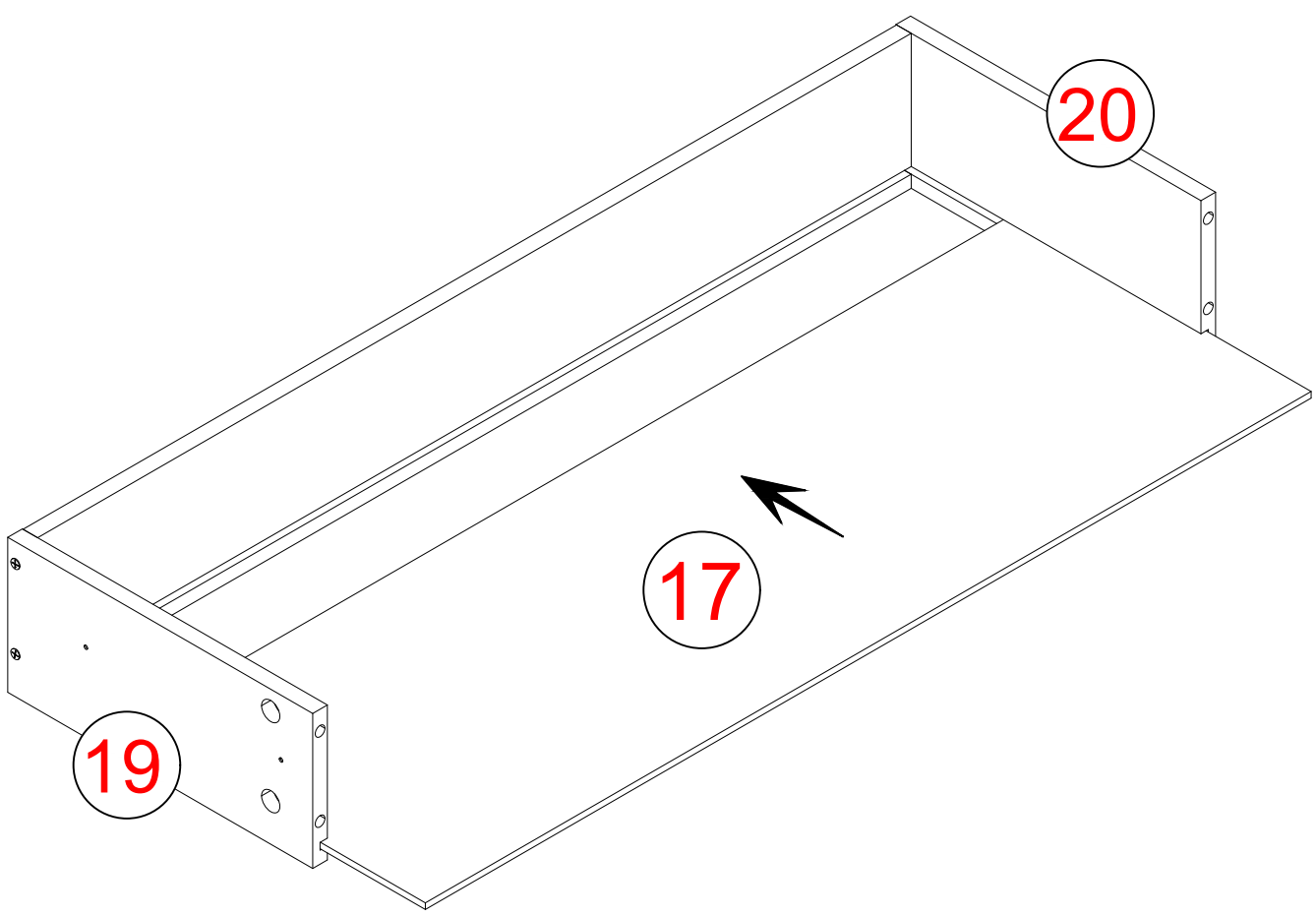

x2

30

A M5x42

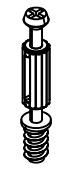

8 PCS

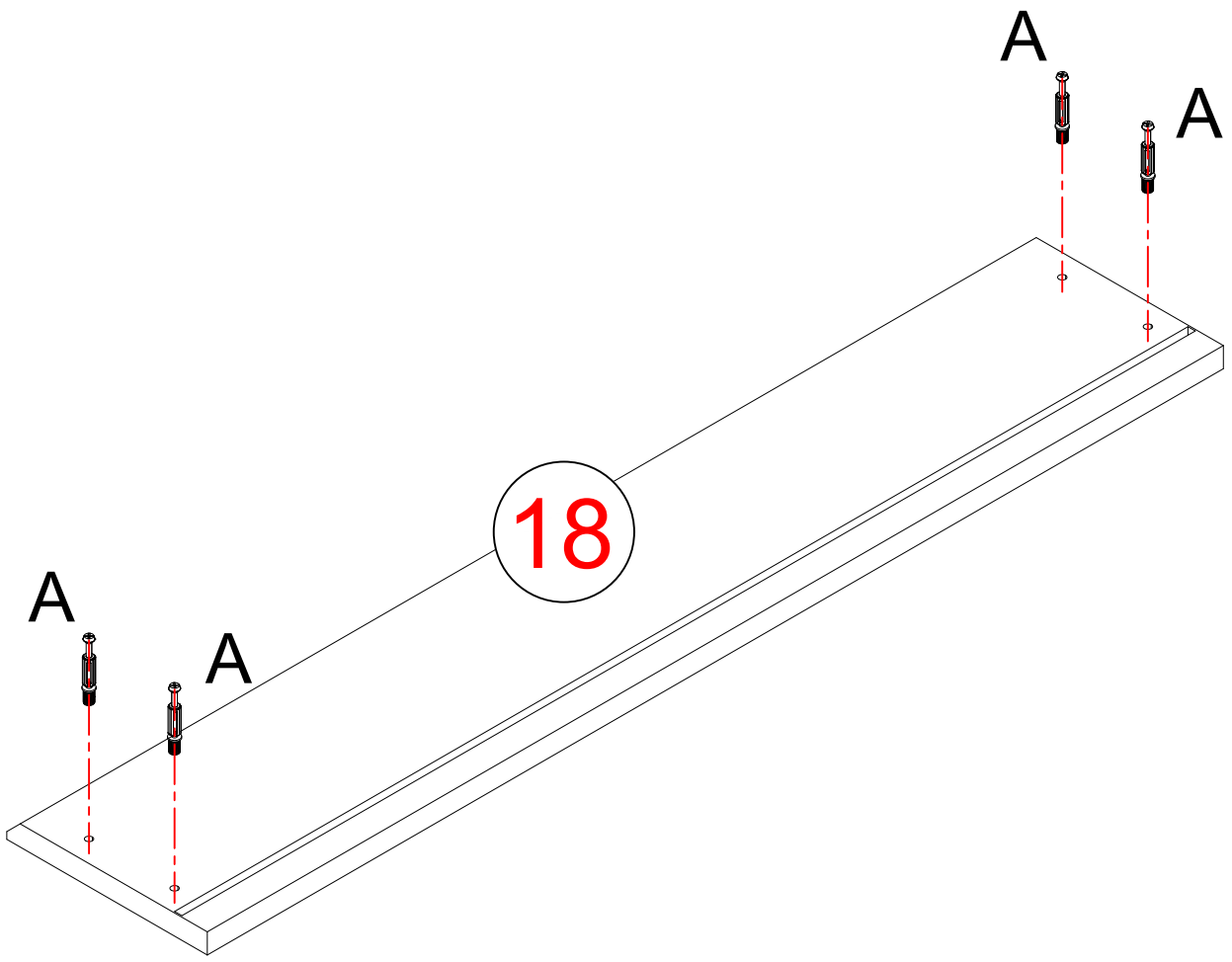

x2

31

B Ø15x10



8 PCS

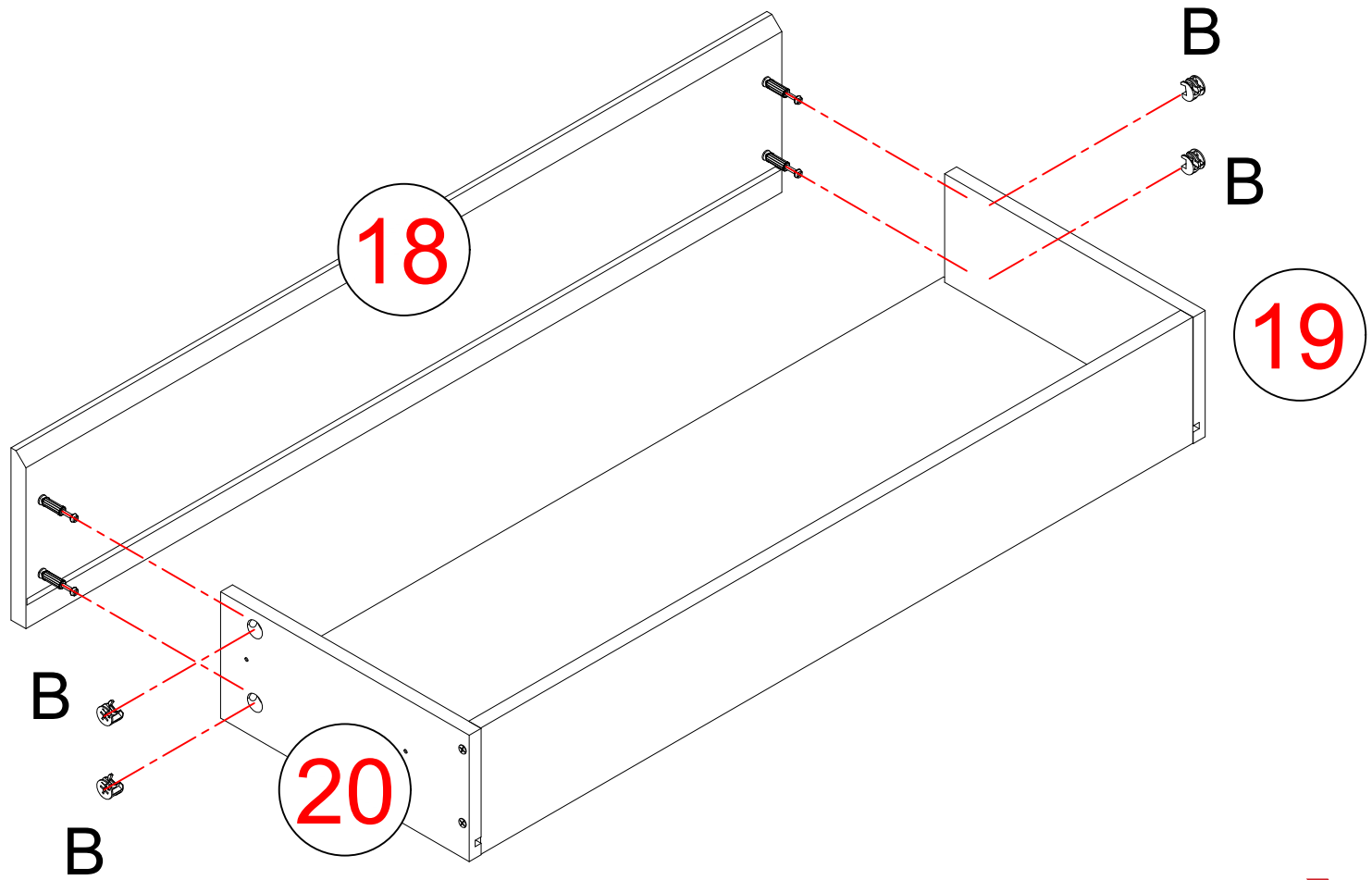

x2

32

F M3.5x12

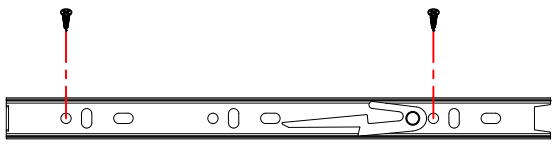

8 PCS

x2

33

C Ø6x40

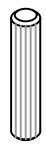

40 PCS

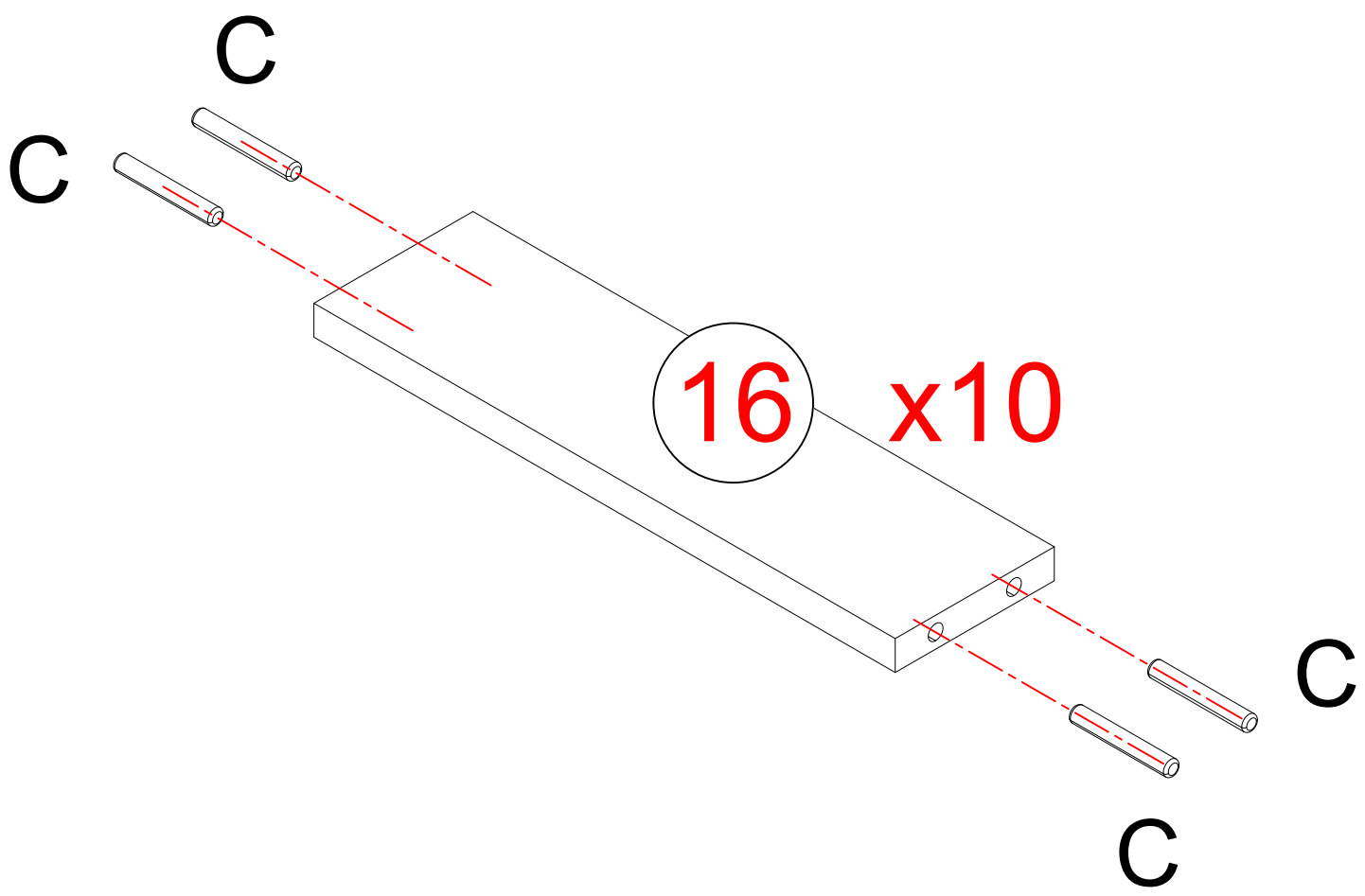

34

D M5x40

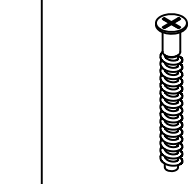

8 PCS

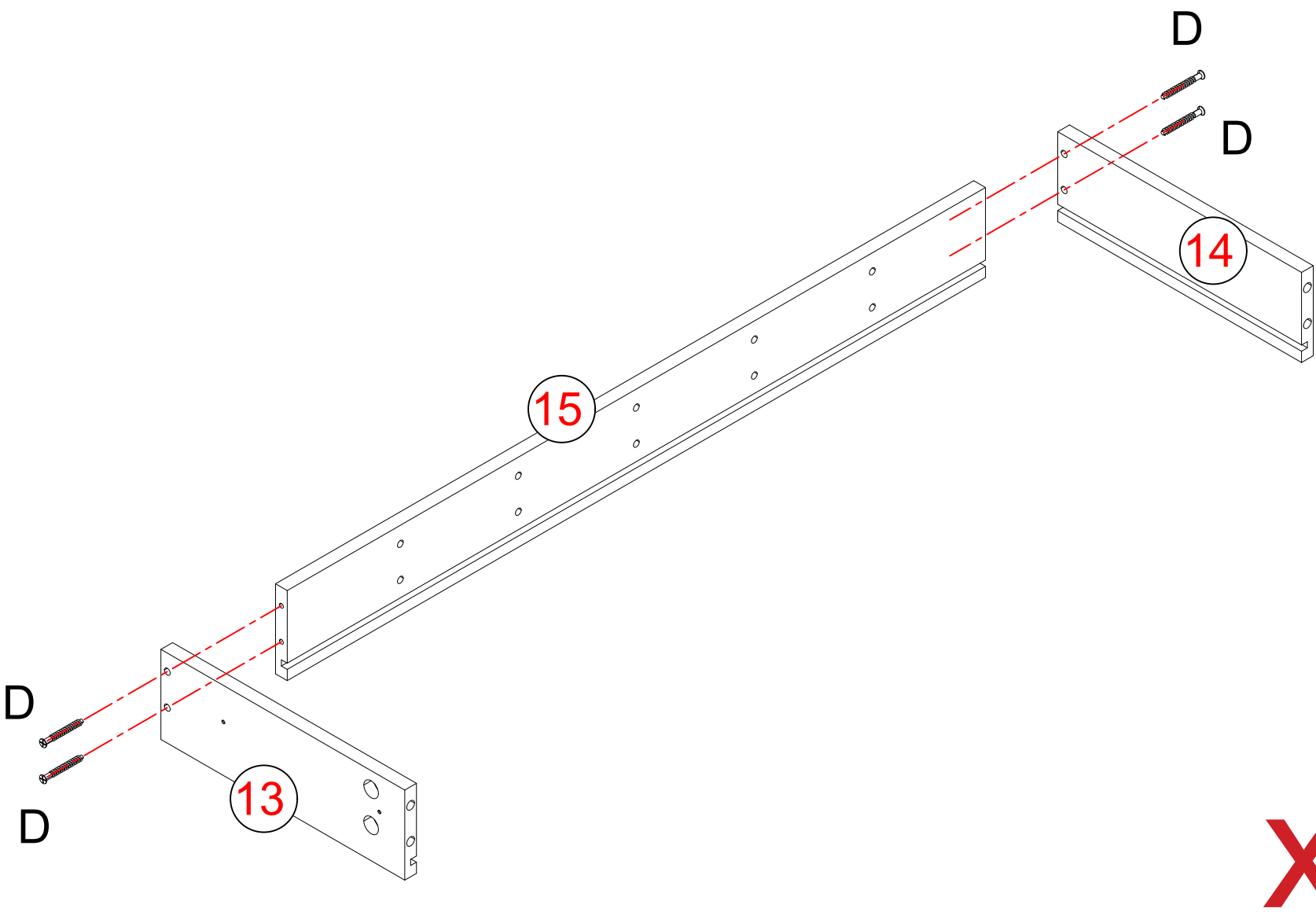

x2

35

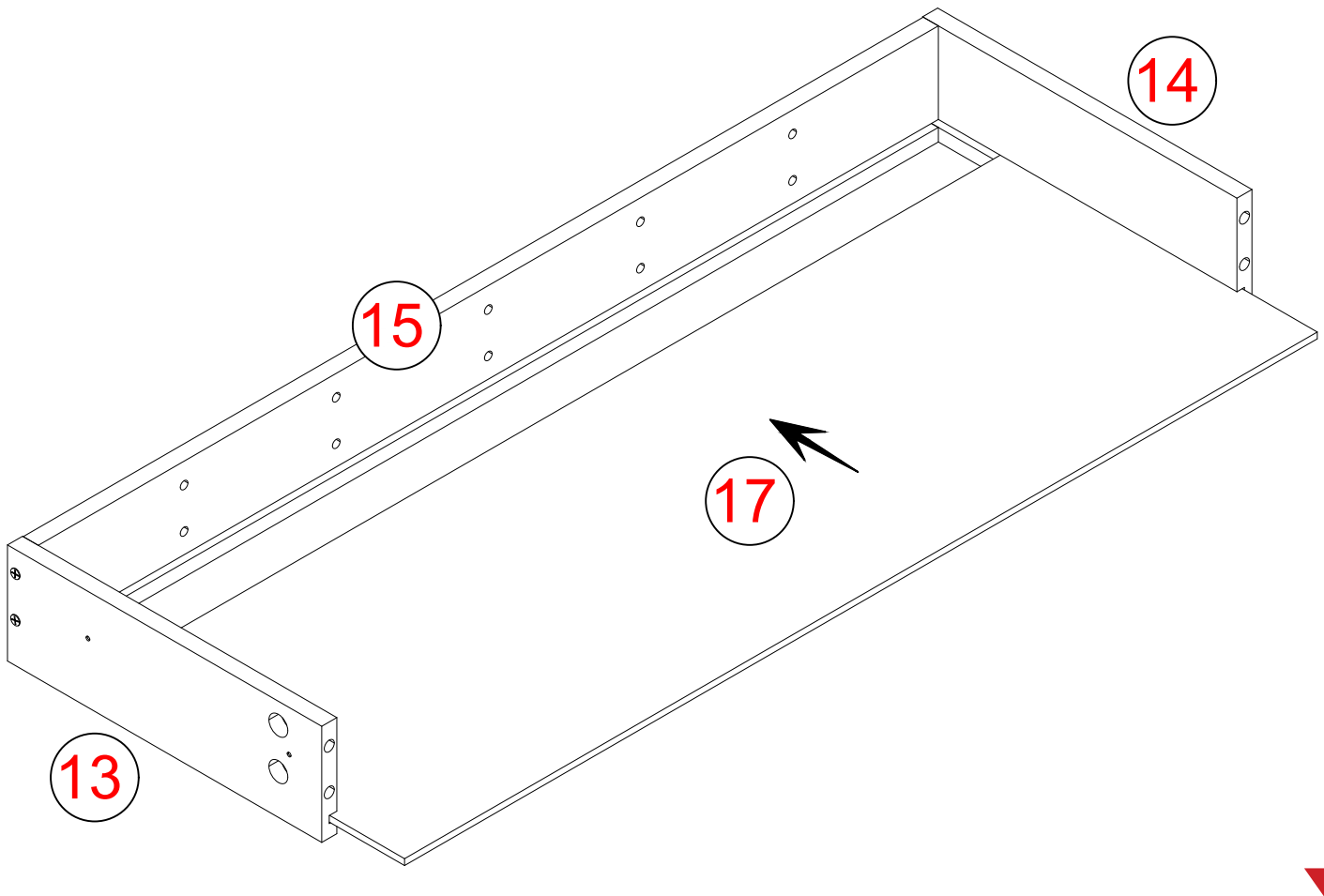

x2

36

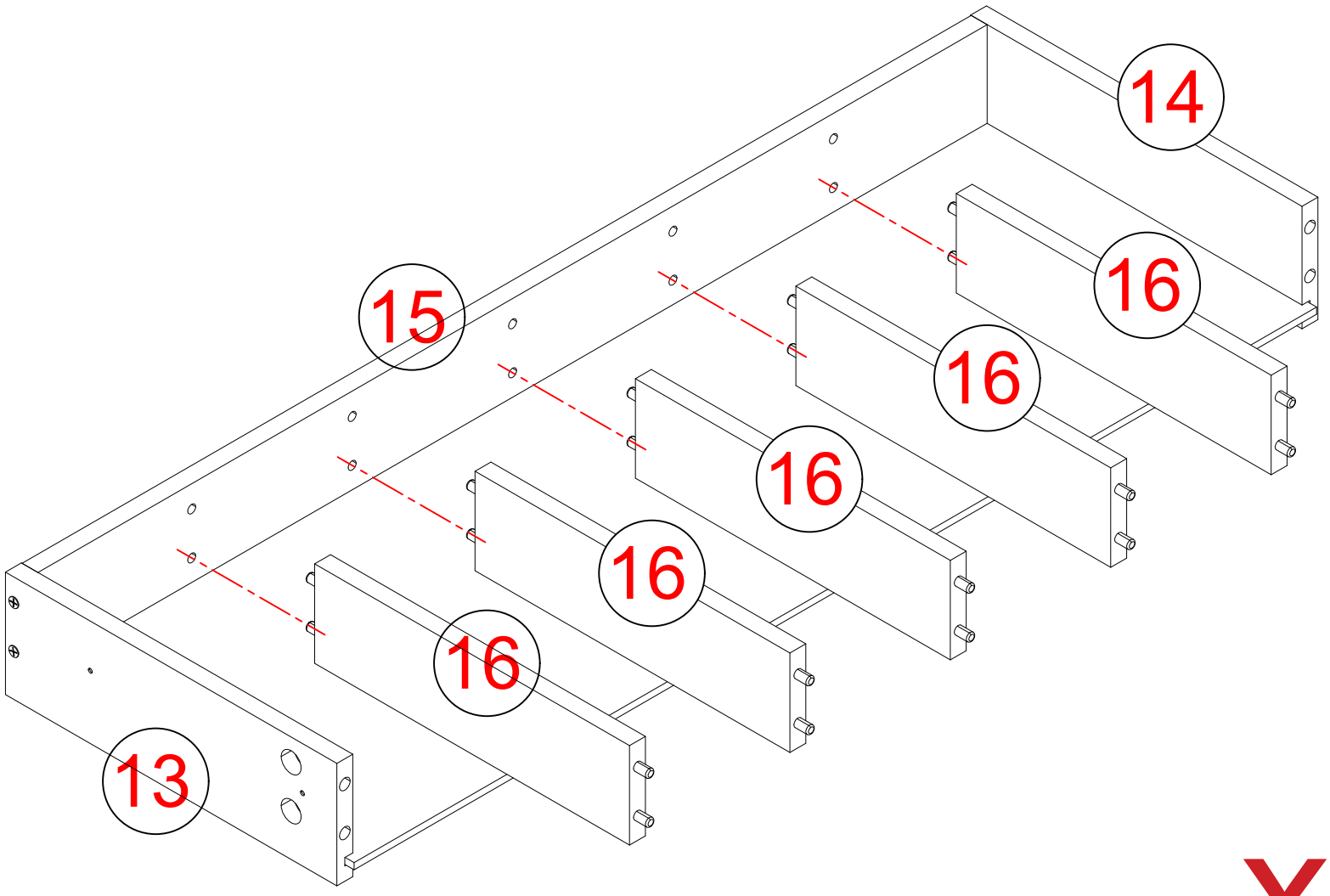

x2

37

A M5x42

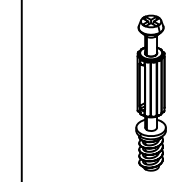

8 PCS

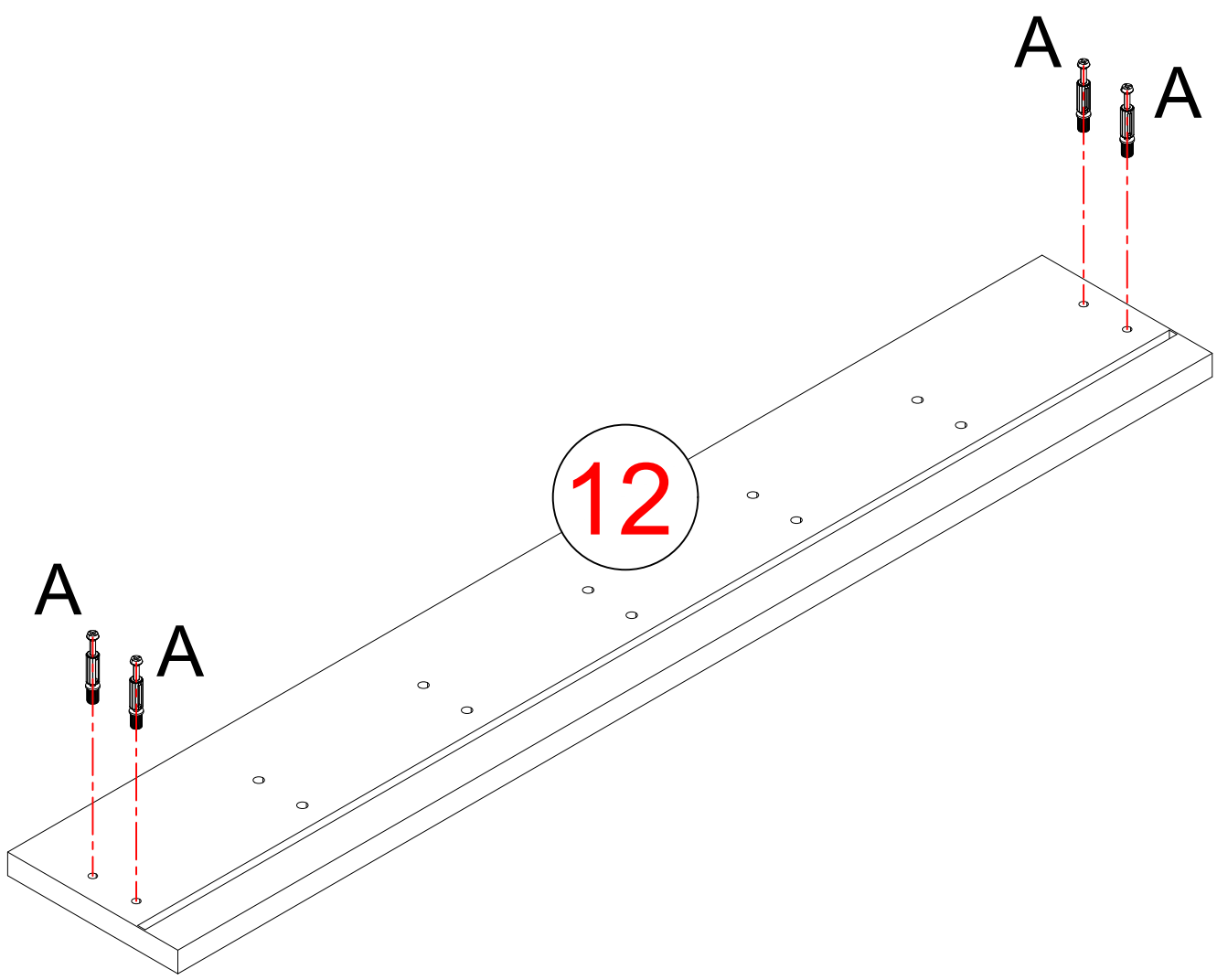

x2

38

B Ø15x10



8 PCS

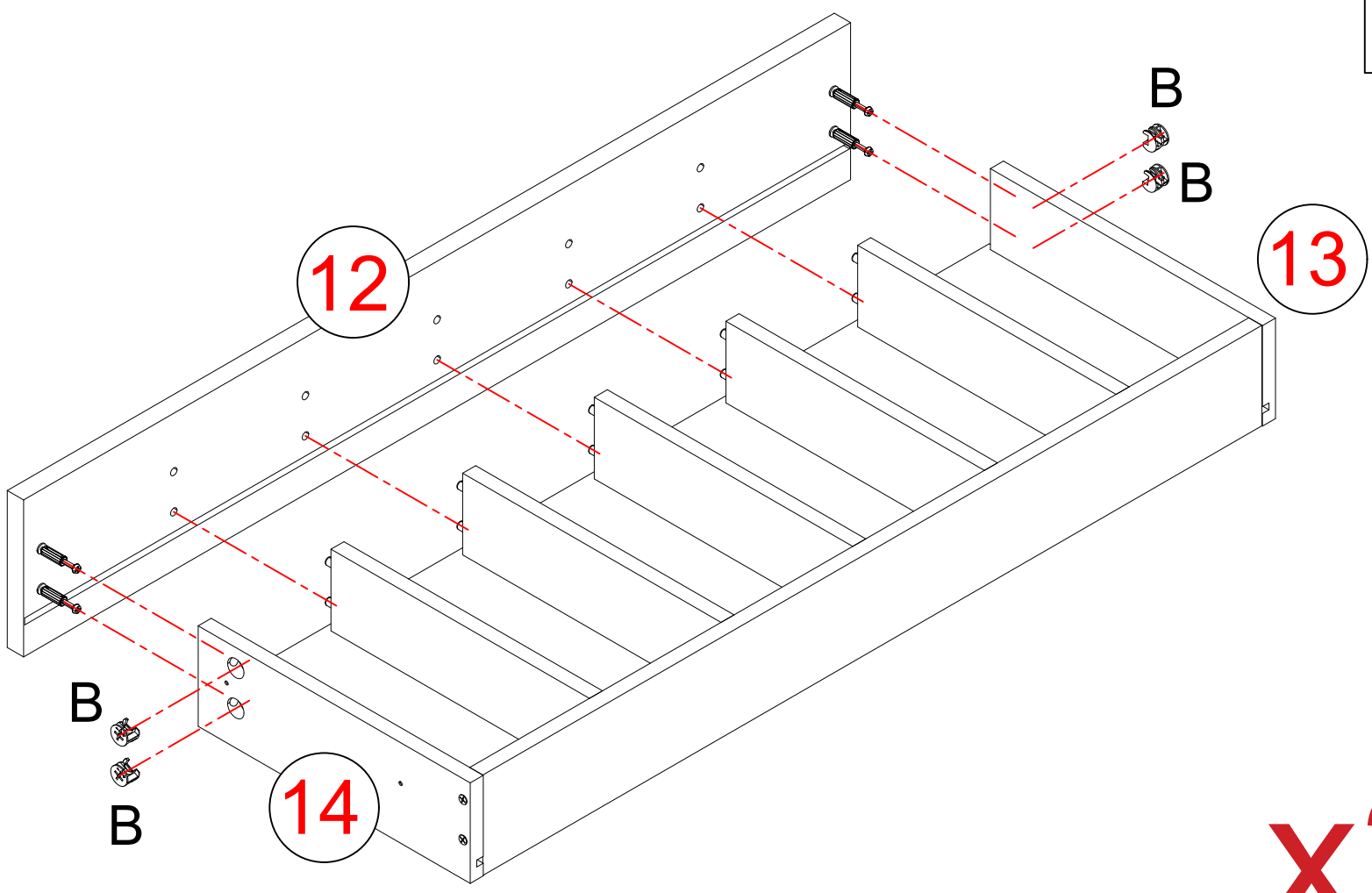

x2

39

F M3.5x12



8 PCS

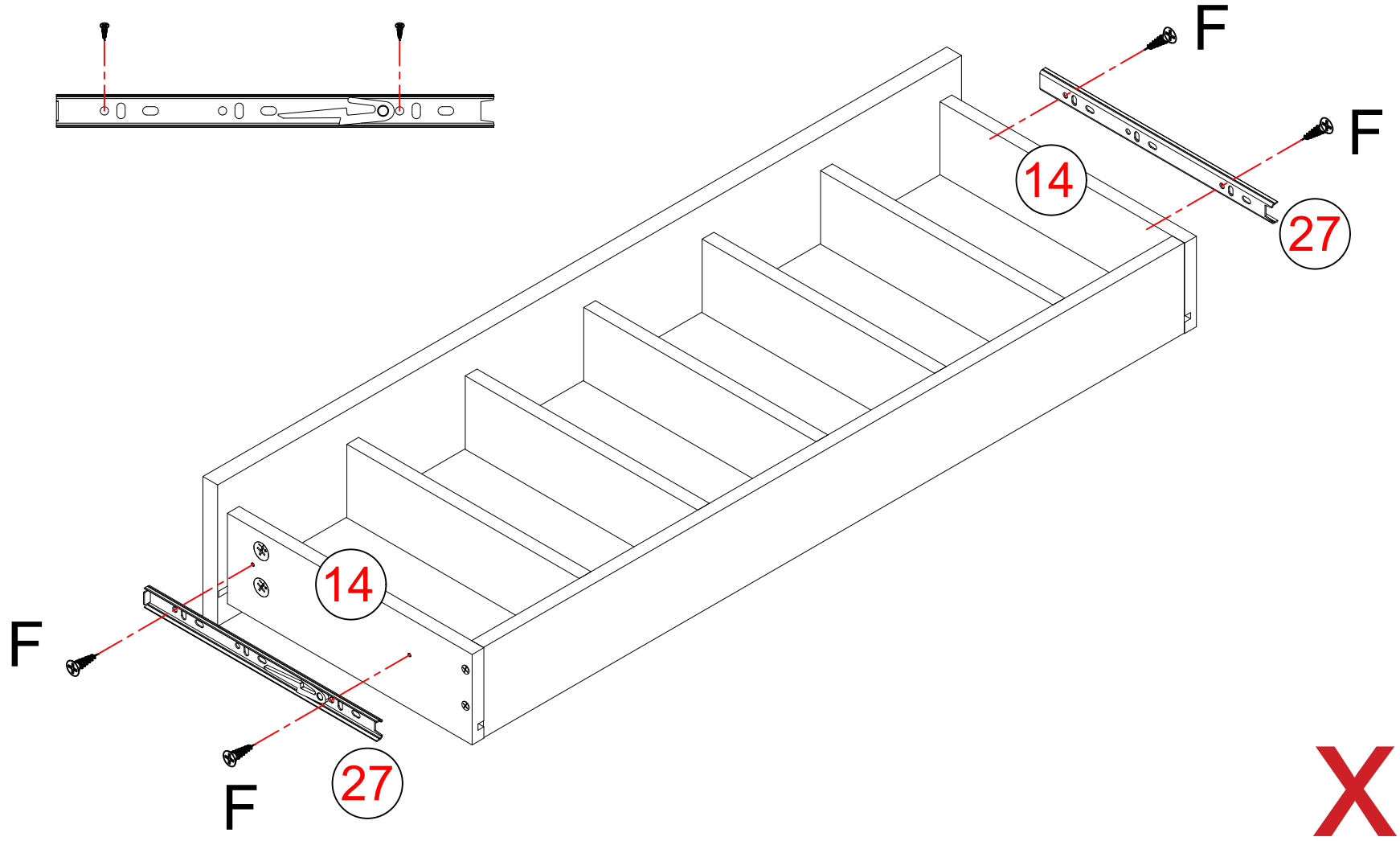

x2

40

D M5x40

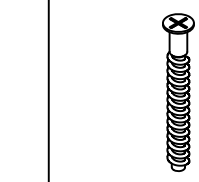

16 PCS

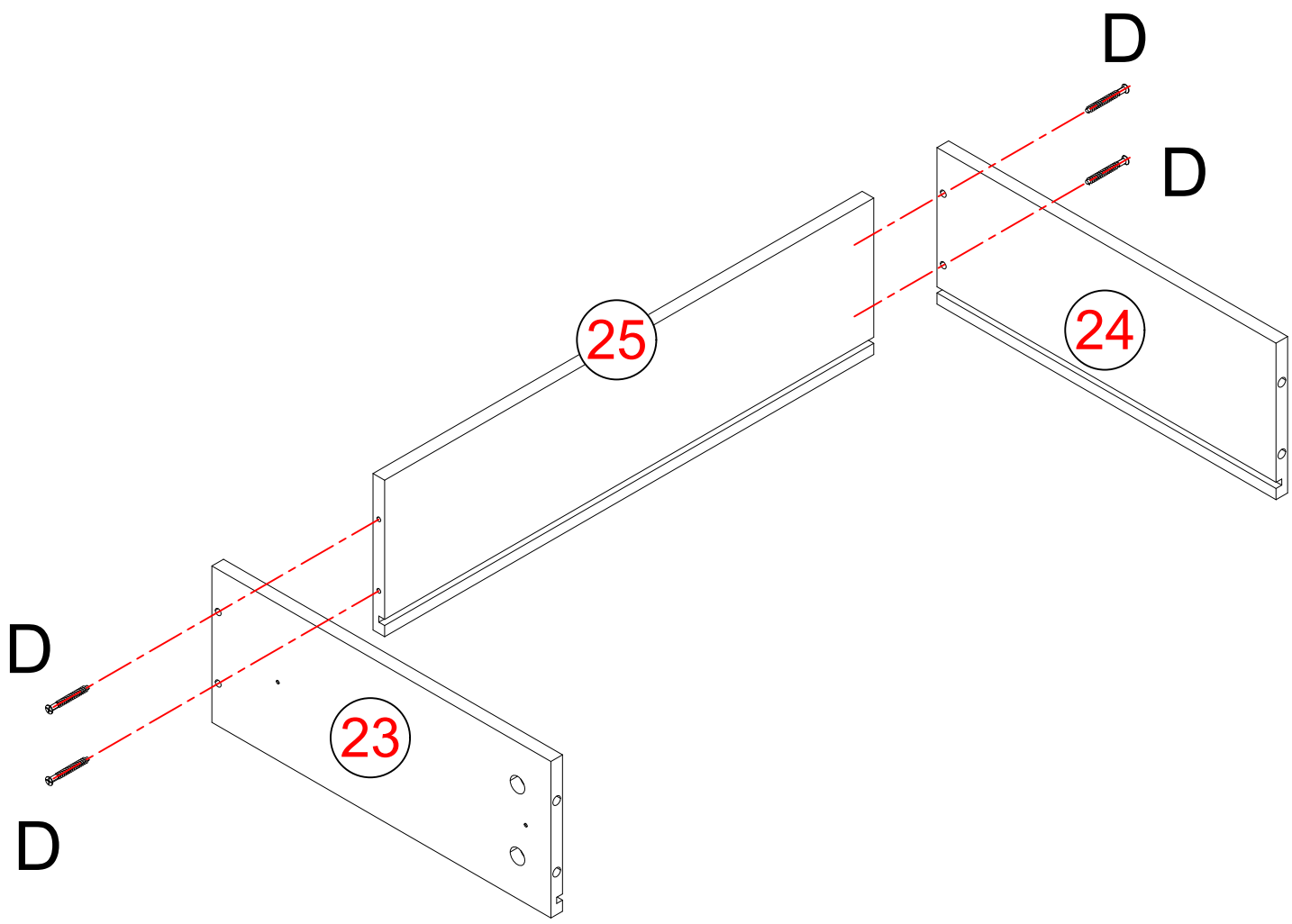

x4

41

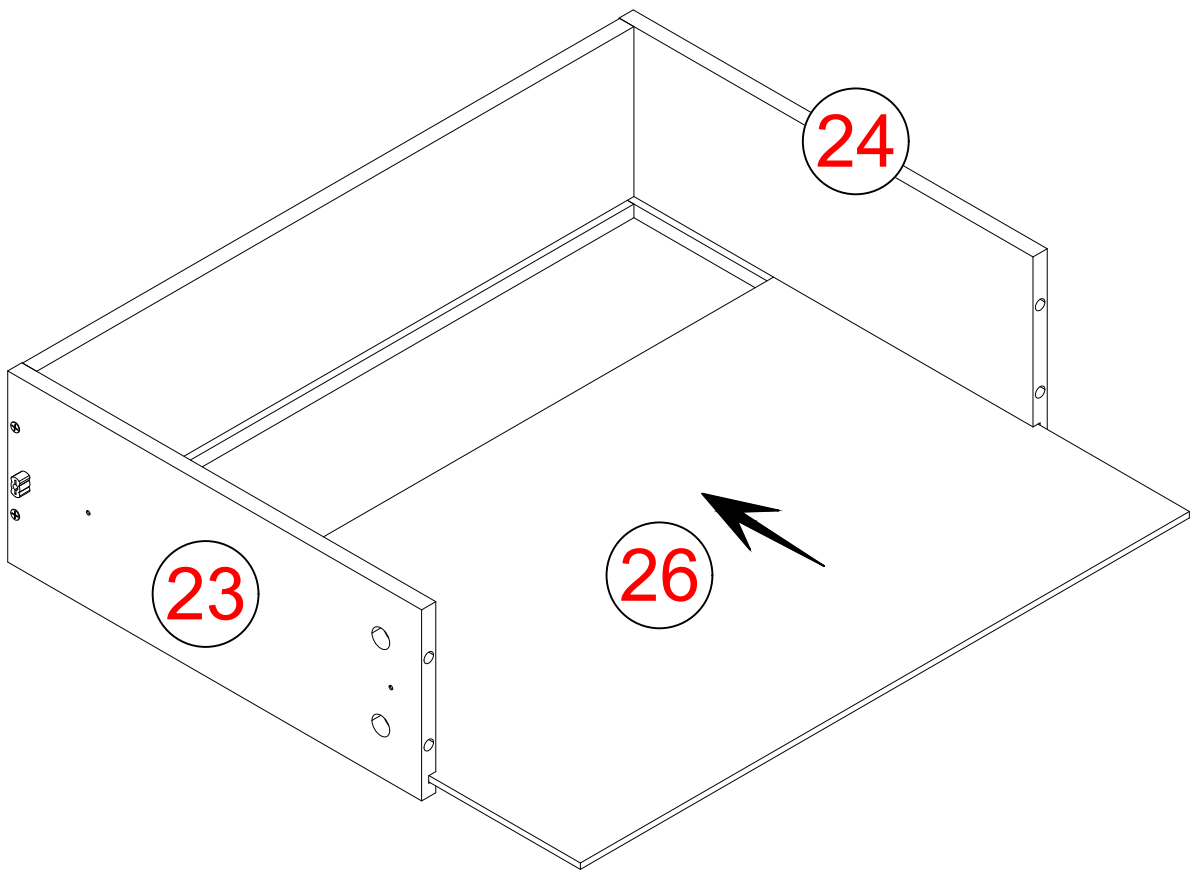

x4

42

A M5x42

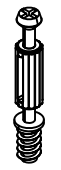

16 PCS

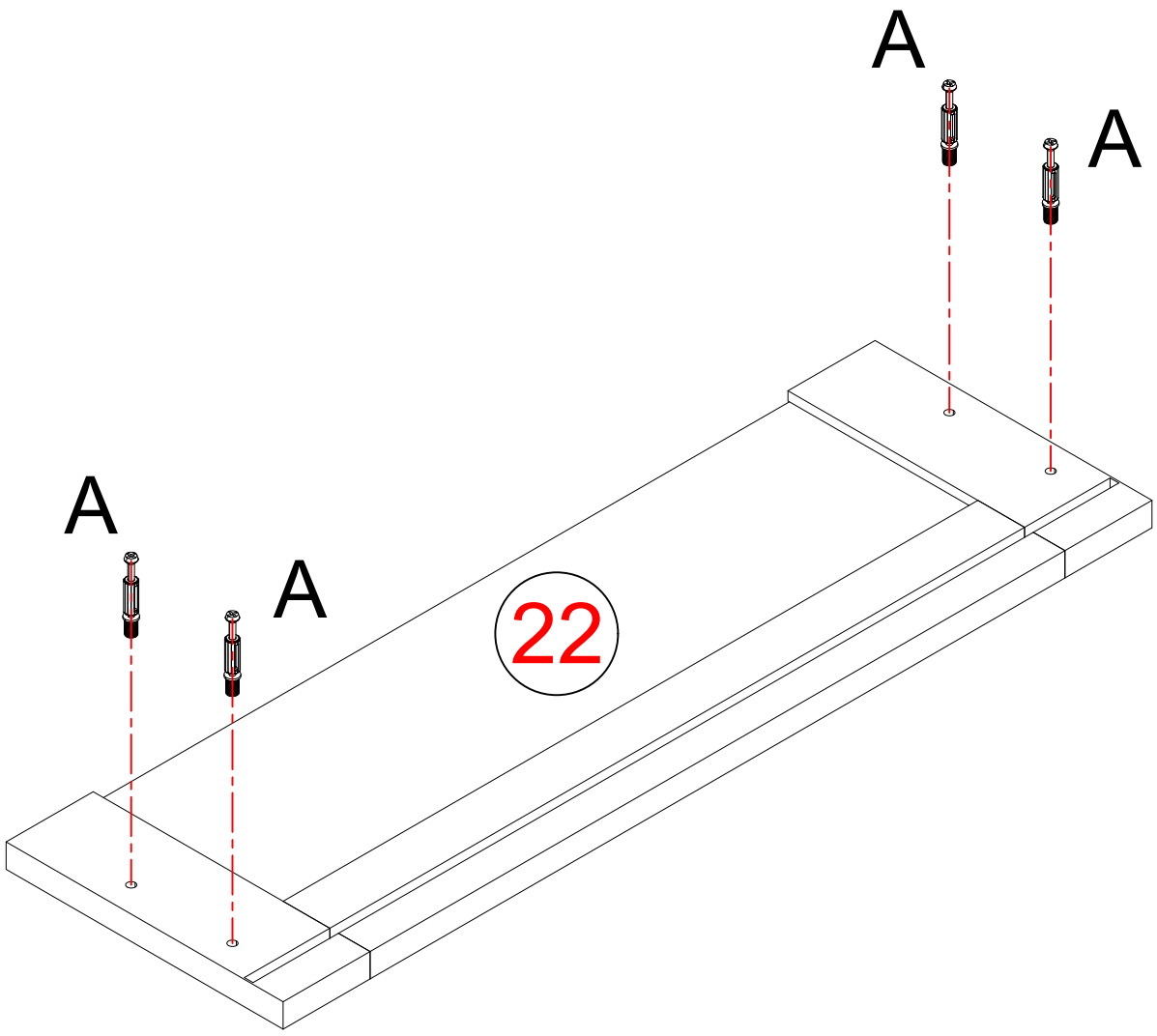

x4

43

B Ø15x10



16 PCS

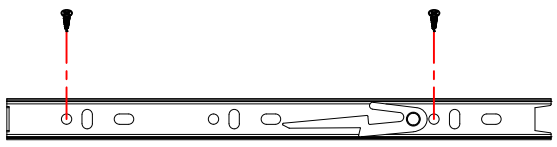

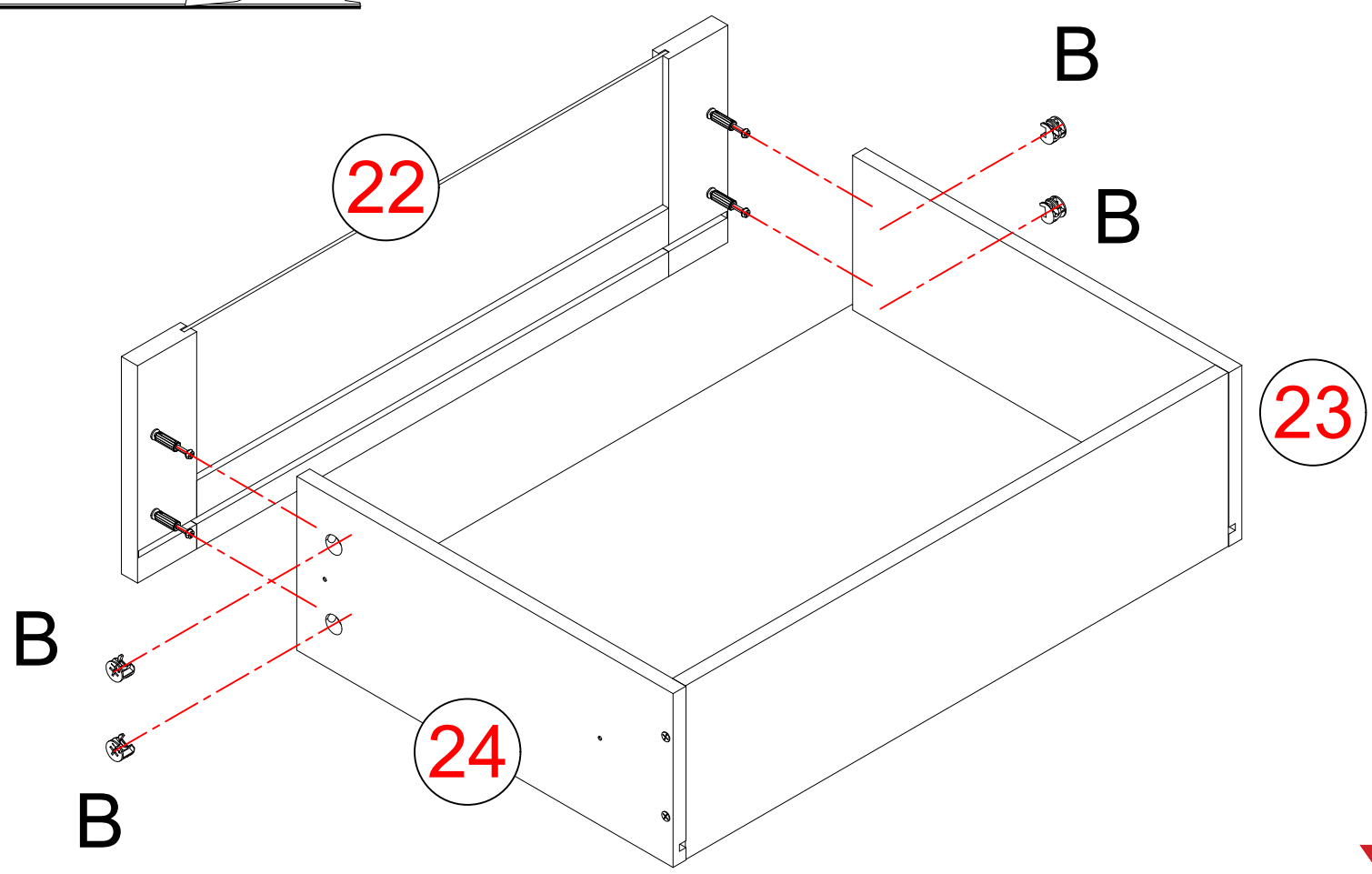

x4

44

F M3.5x12



16 PCS

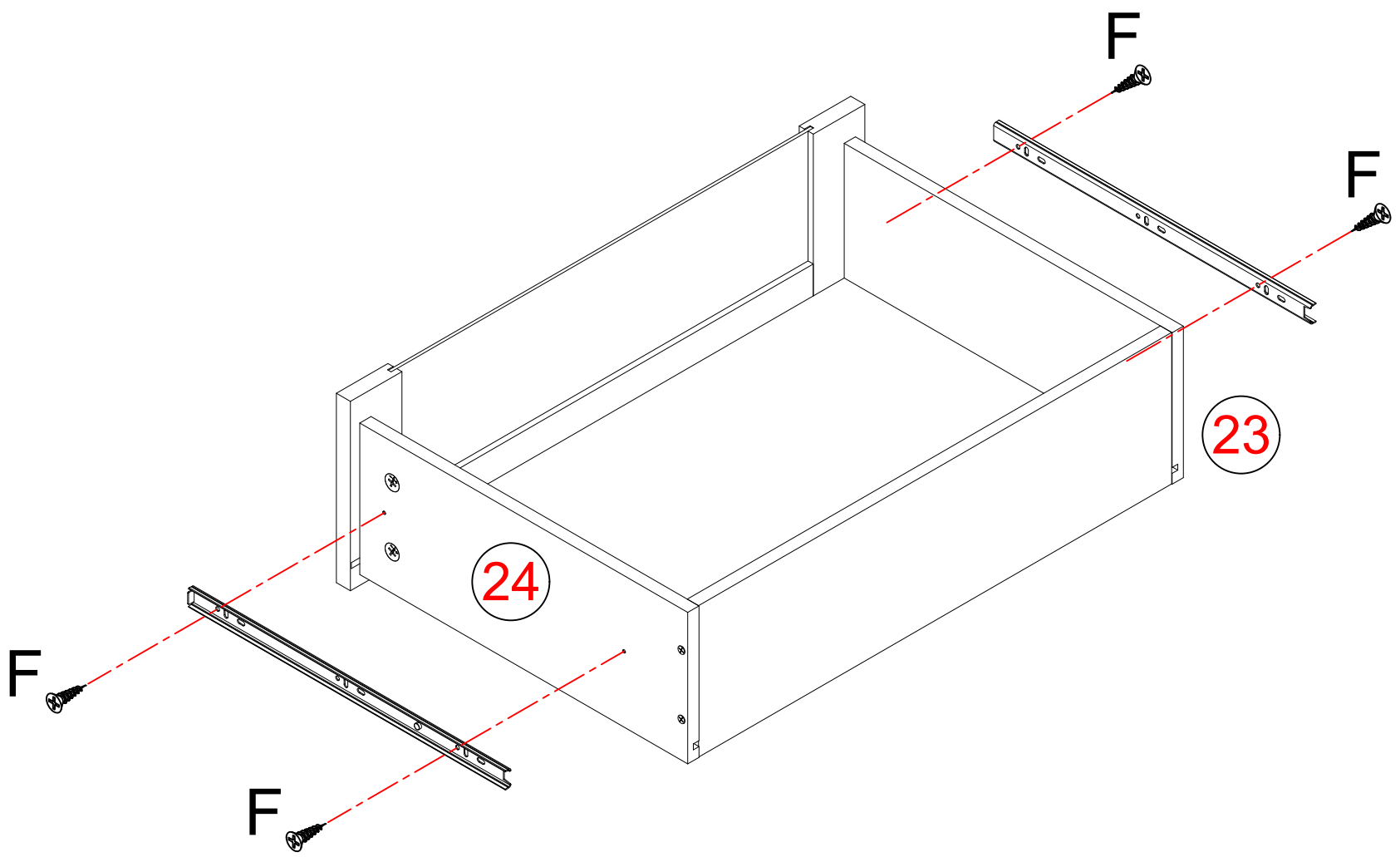

x4

45

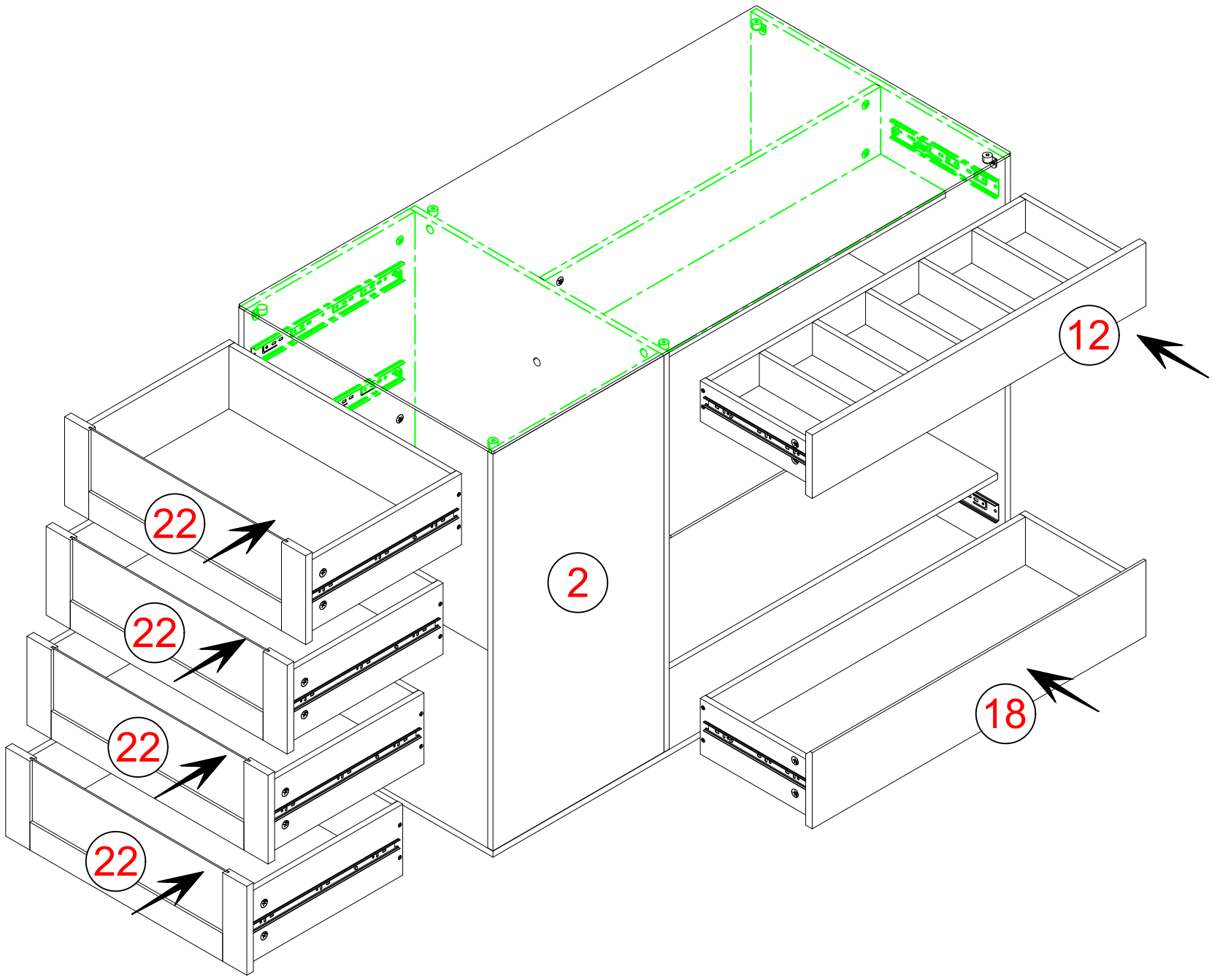

46

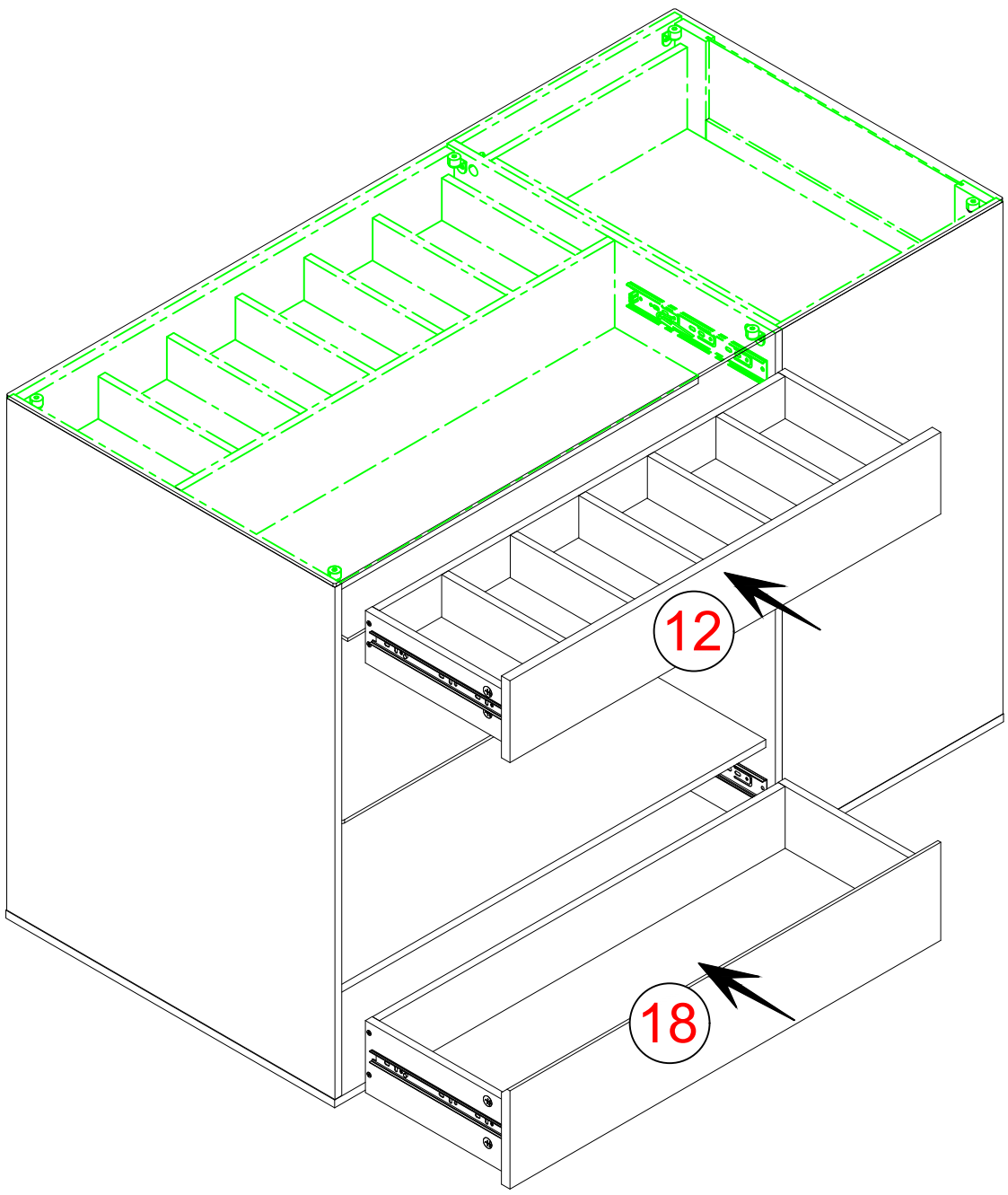

47

