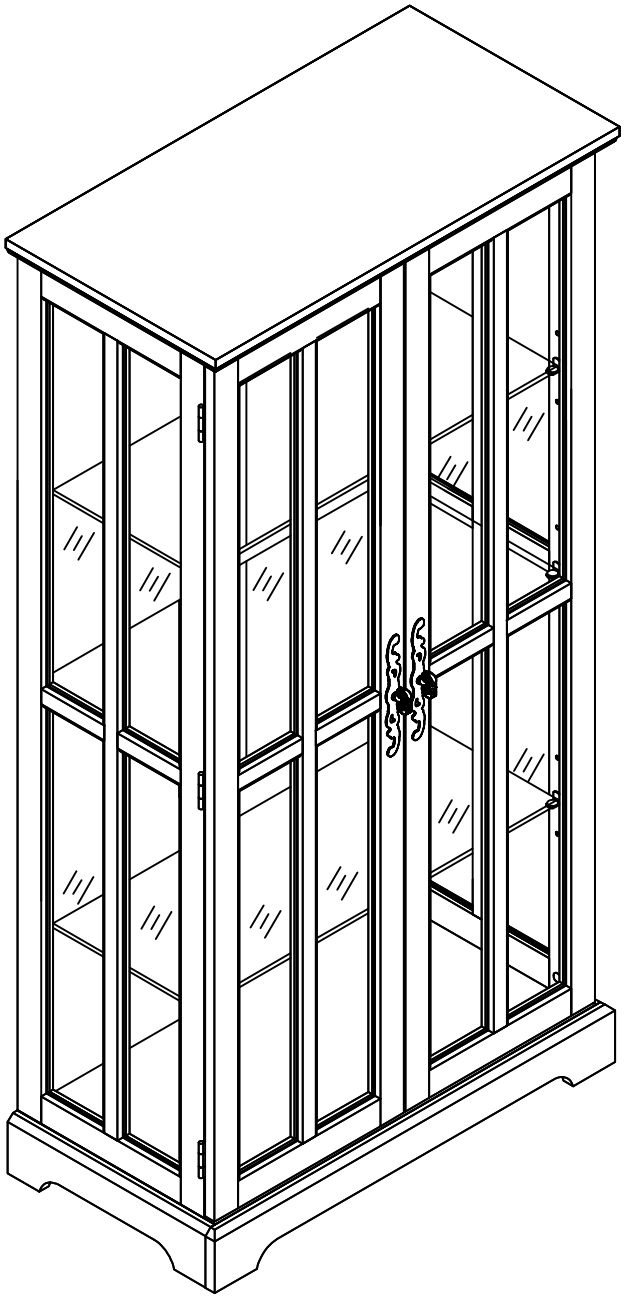

TWO DOORS GLASS CABINET

Assembly Instruction

NOTE: This instruction manual contains IMPORTANT safety information. Please read carefully before assembling the product

List of Parts

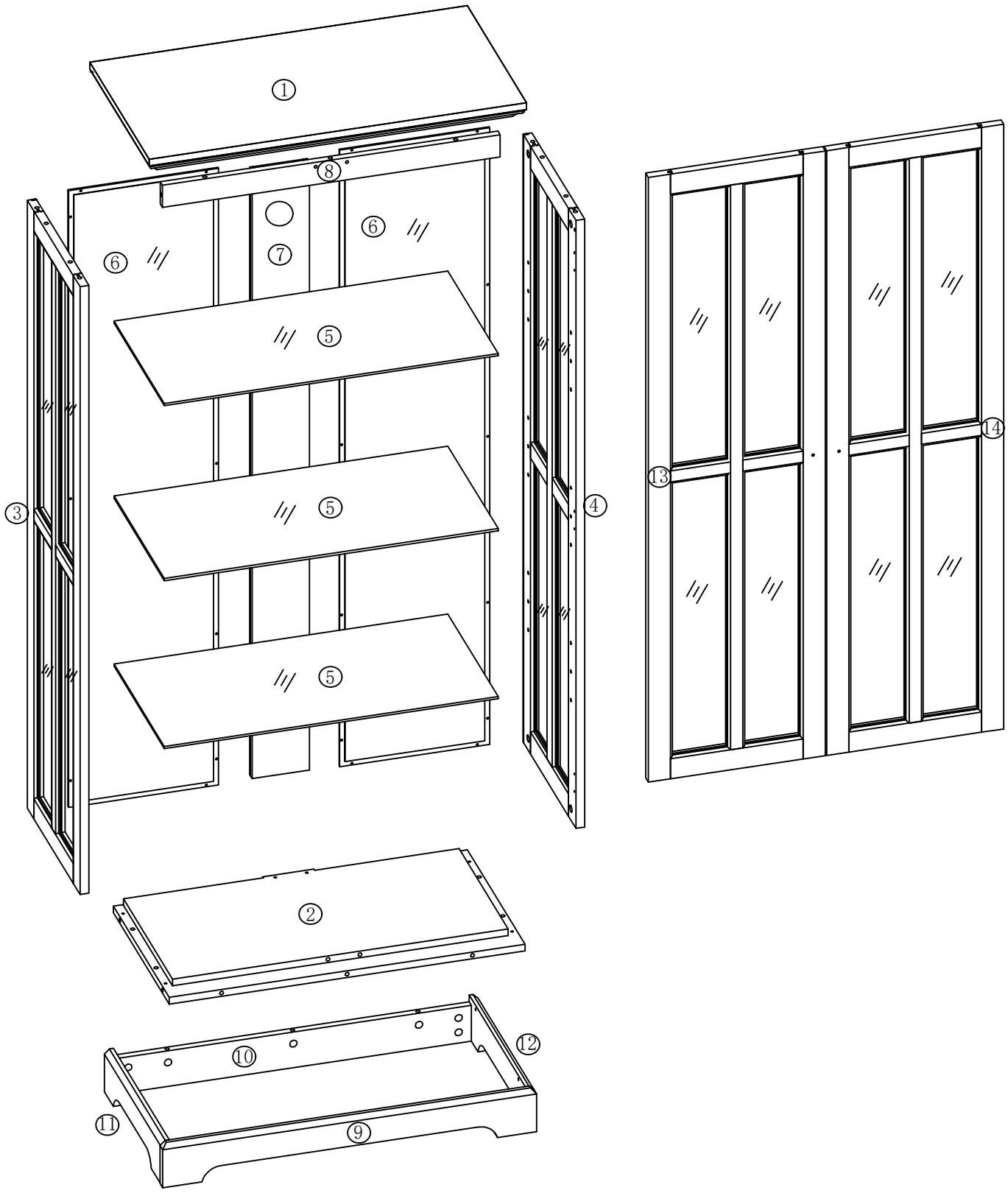

Hardware

A x 35+4	B x 35+4	C x 8+2	D x 8+1	E x 4
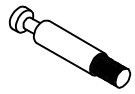 Ø6 x 34mm	 Ø15 x 10mm	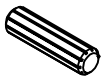 Ø8*30mm	 Ø3*12mm	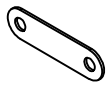

F x 2	G x 2	H x 12+2	I x 46+4	J x 2
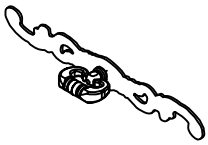	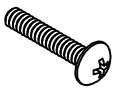 Ø4*25mm	 Ø20mm	 Ø3.5*14mm	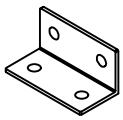

K x 12+2	L x 28+2	M x 6	N x 2	O x 1
	 Ø3*12mm	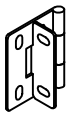	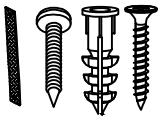	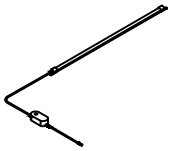

P x 1	Q x 1
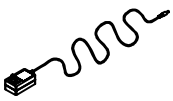	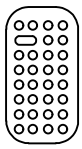

STEP1

A x 15

Ø6 x 34mm

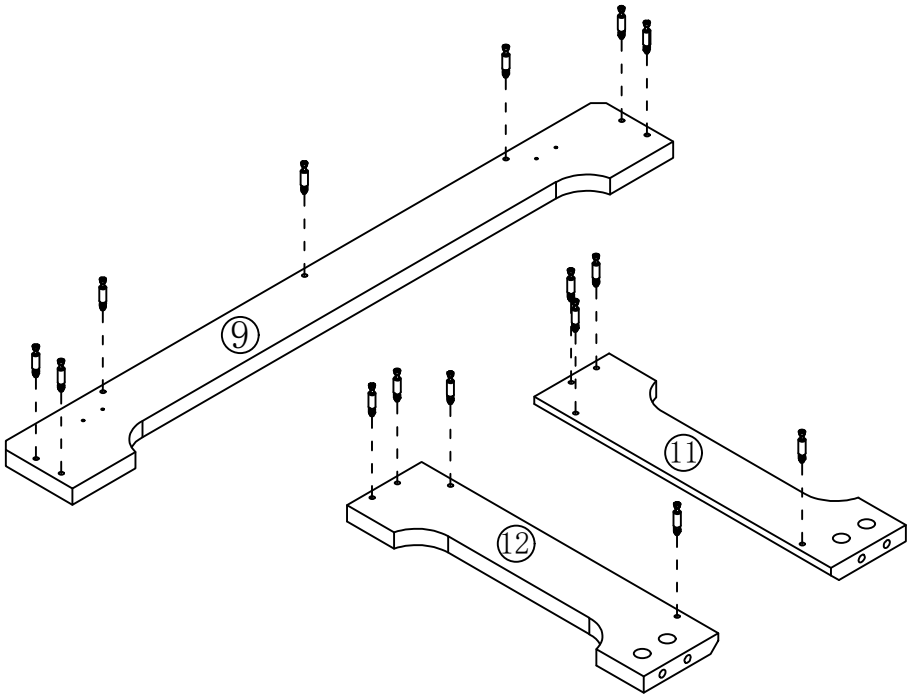

STEP2

A x 9
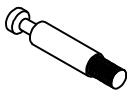
Ø6 x 34mm

STEP3

B x 3

Ø15 x 10mm

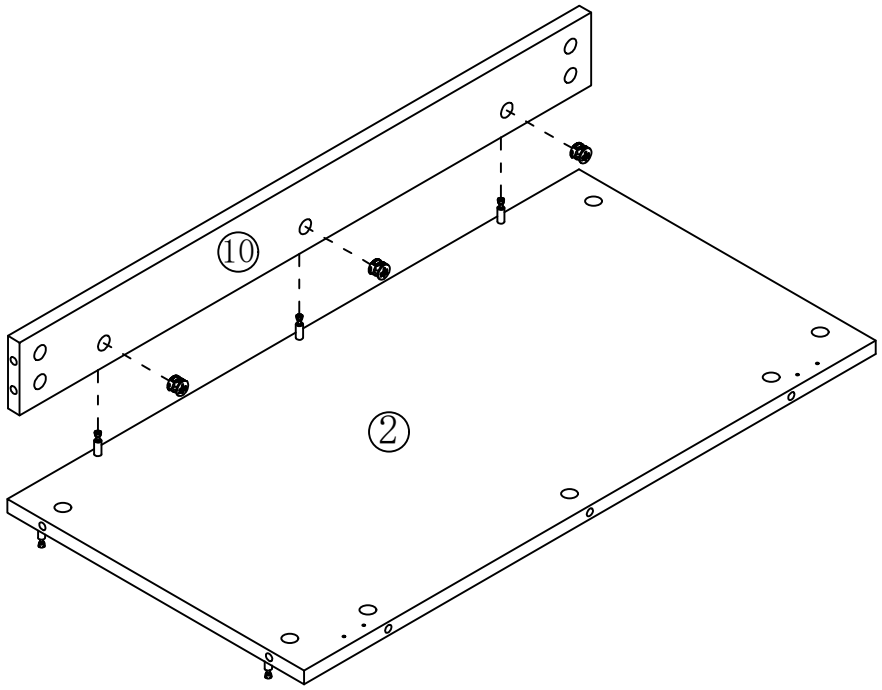

STEP4

B x 8

Ø15 x 10mm

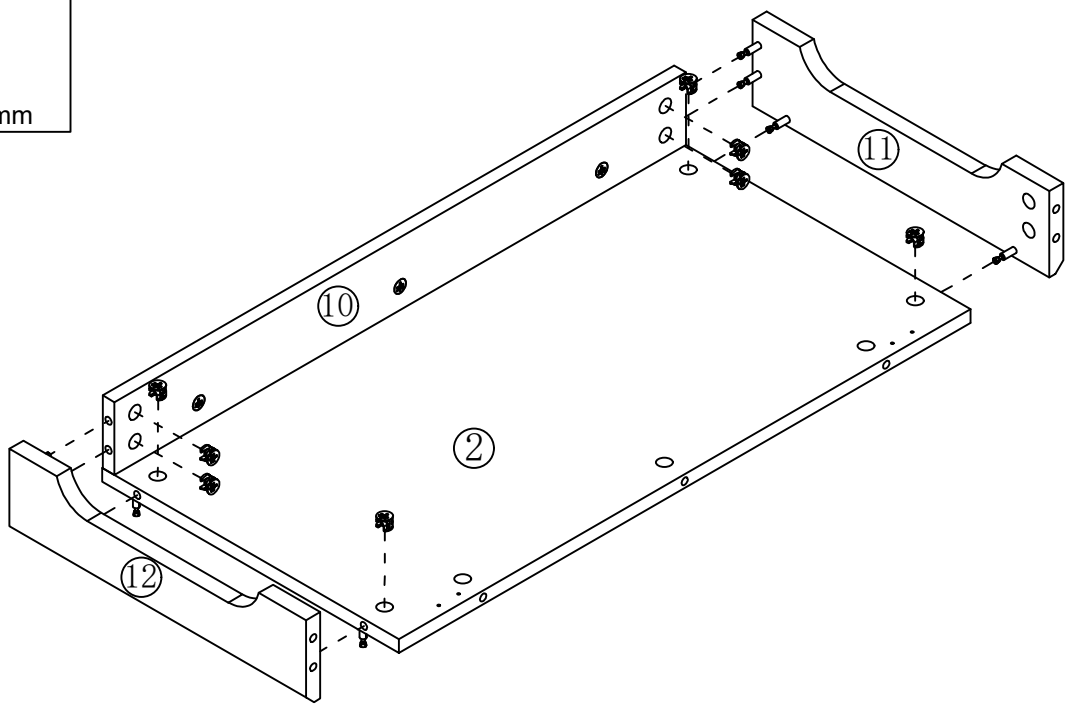

STEP5

B x 7

Ø15 x 10mm

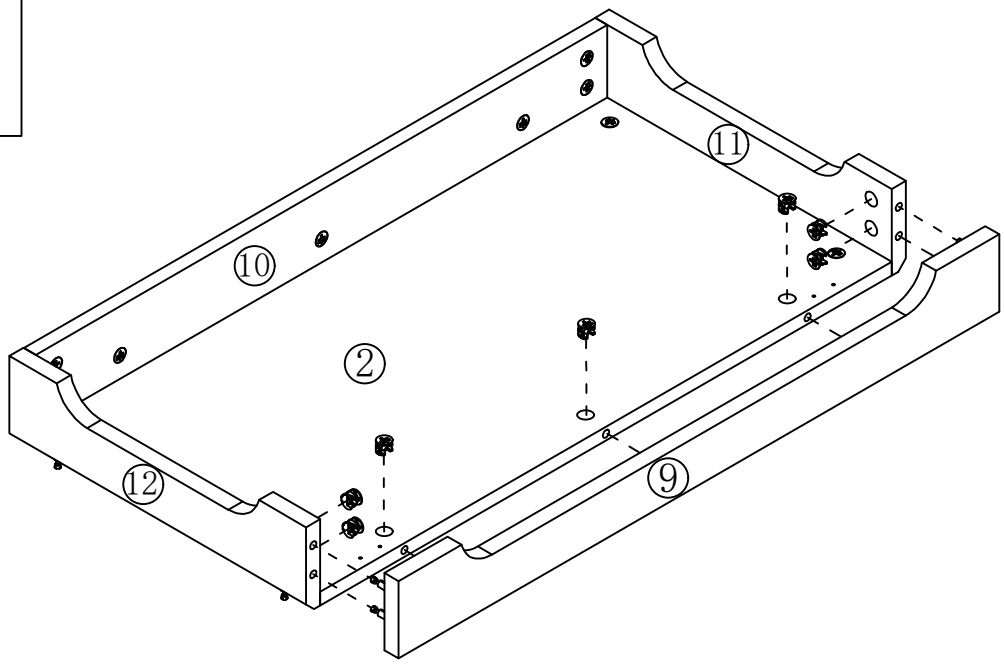

STEP6

I x 8

Ø3.5*14mm
J x 2
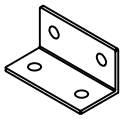

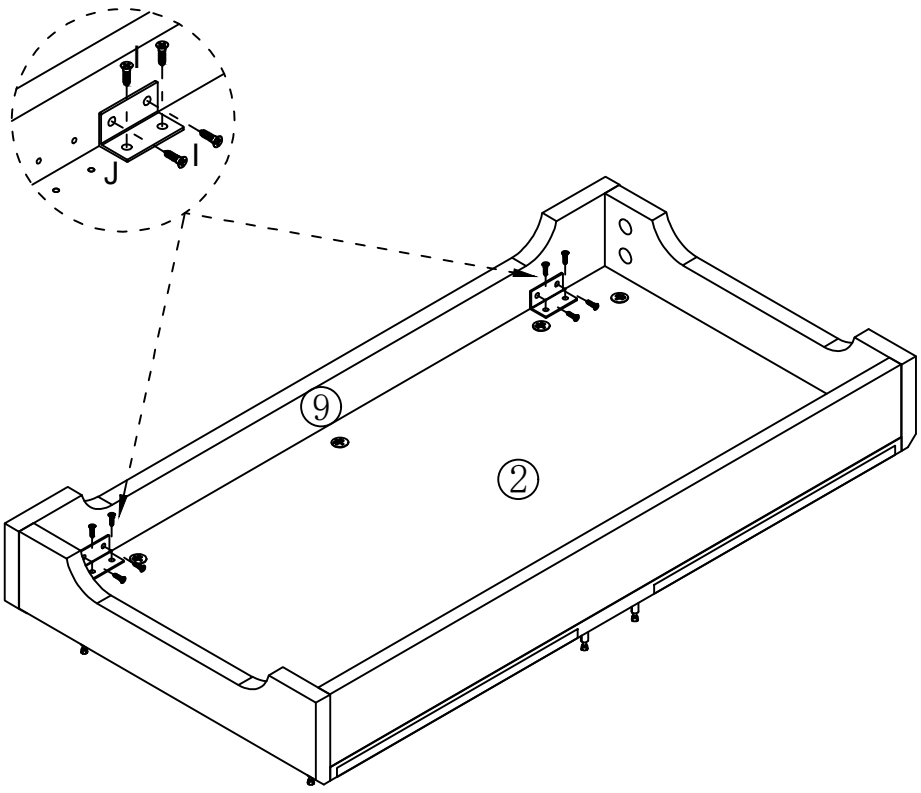

STEP7

A x 2
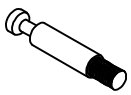
Ø6 x 34mm

STEP8

B x 2

Ø15 x 10mm

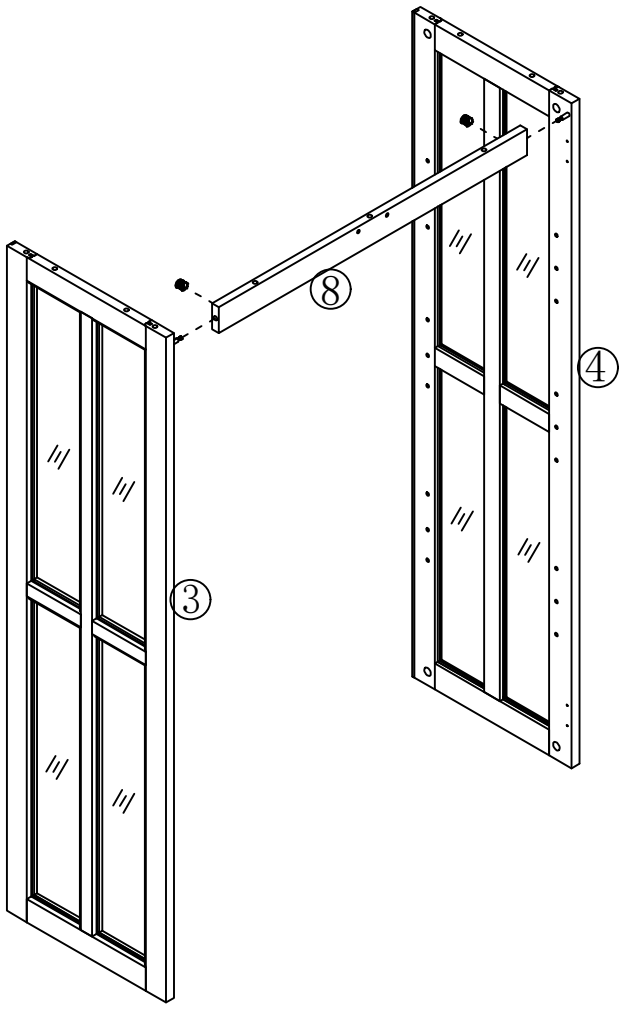

STEP9

B x 6

Ø15 x 10mm
C x 4
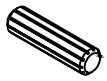
Ø8*30mm

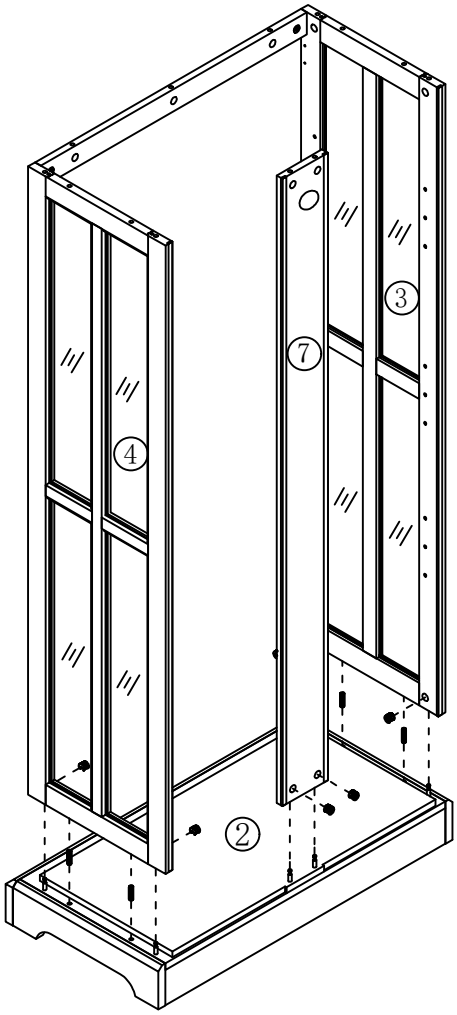

STEP10

A x 9
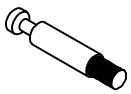
Ø6 x 34mm

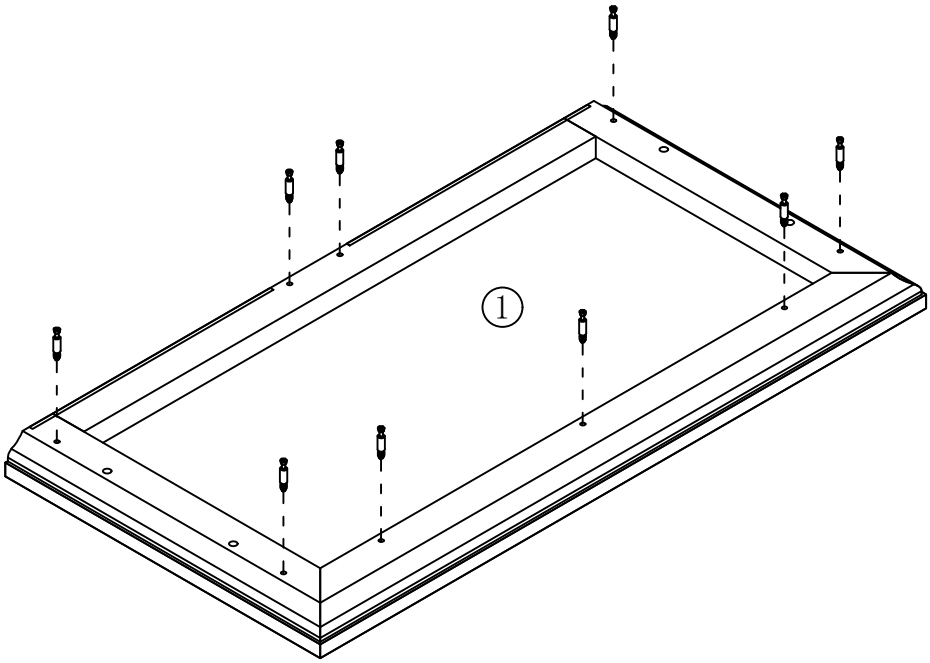

STEP11

I x 2

Ø3.5*14mm

O X 1
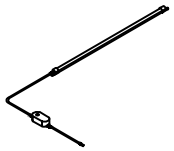

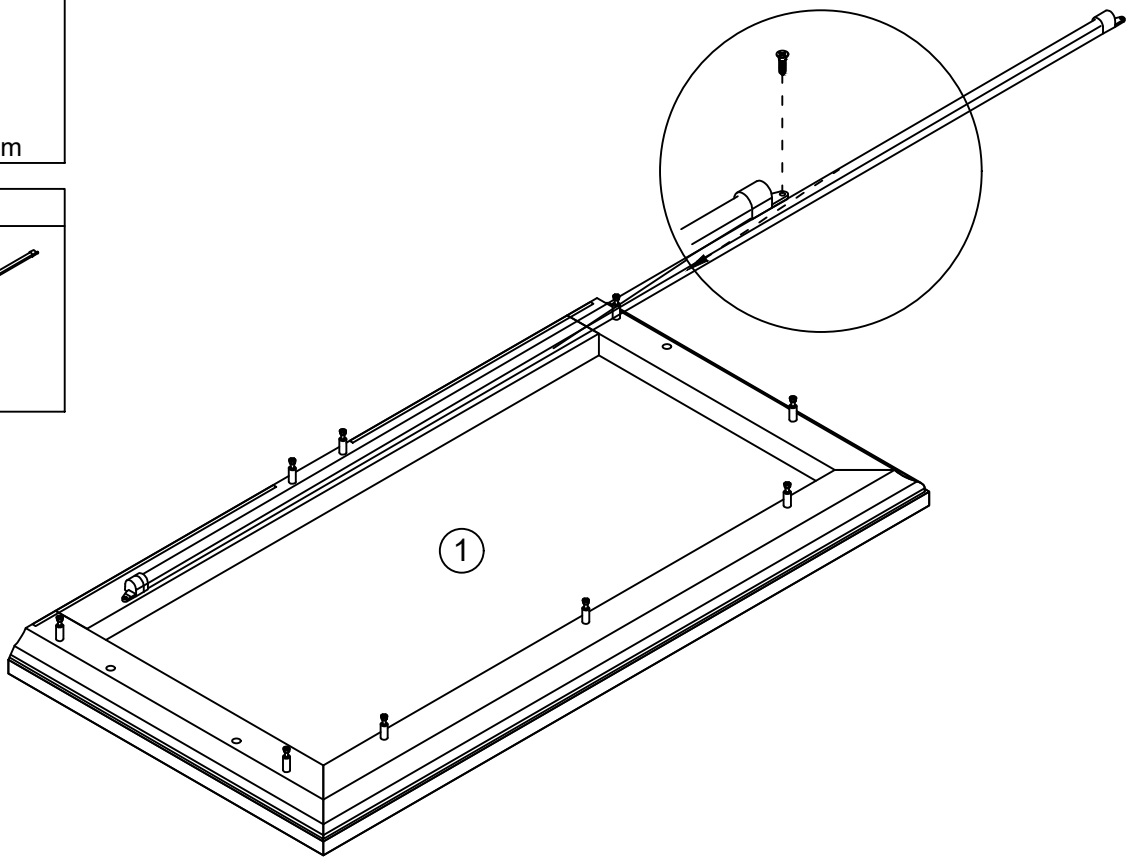

STEP12

B x 9

Ø15 x 10mm
C x 4
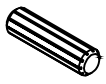
Ø8*30mm

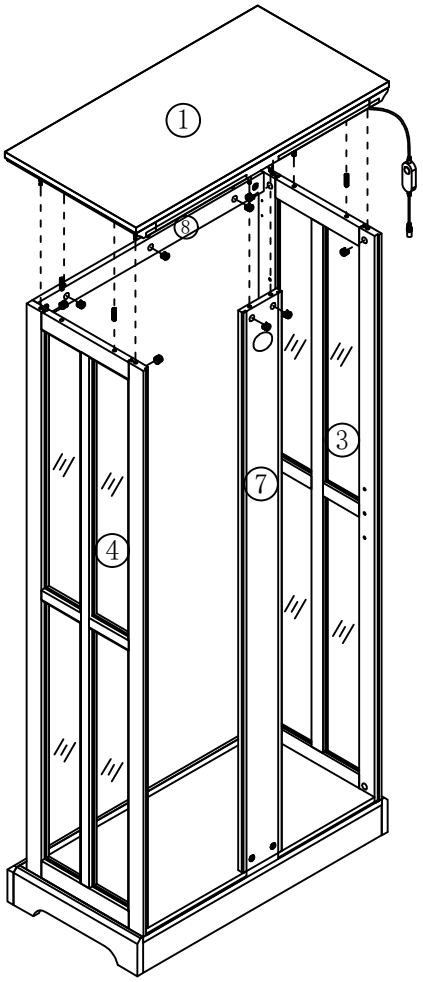

STEP13

L x 28

Ø3*12mm

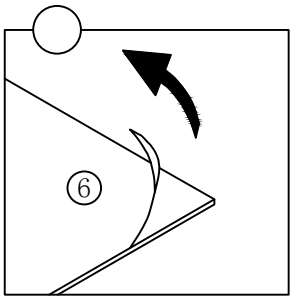

Remove protective film
on the mirror panel.

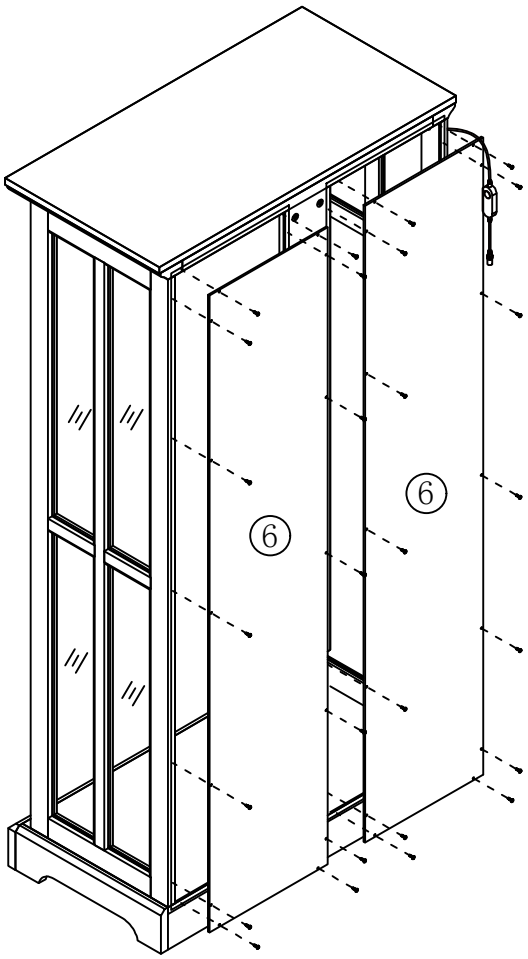

STEP14

H x 12

Ø20mm

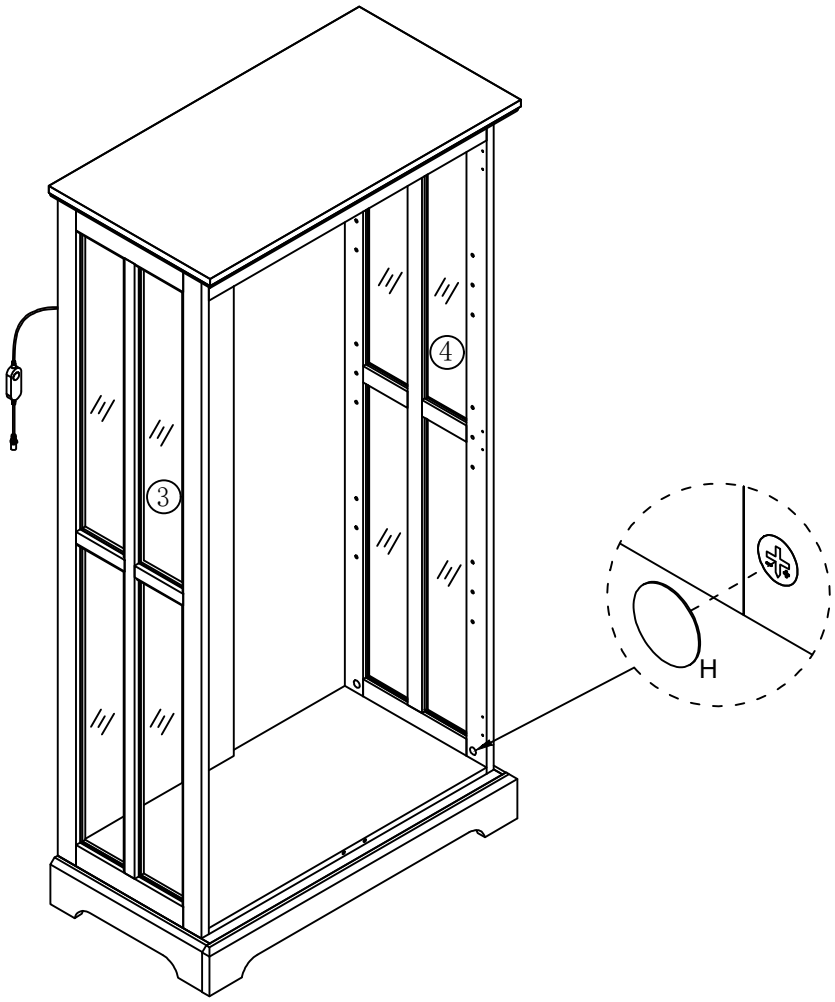

STEP15

I x 12

Ø3.5*14mm
M x 6
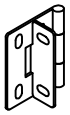

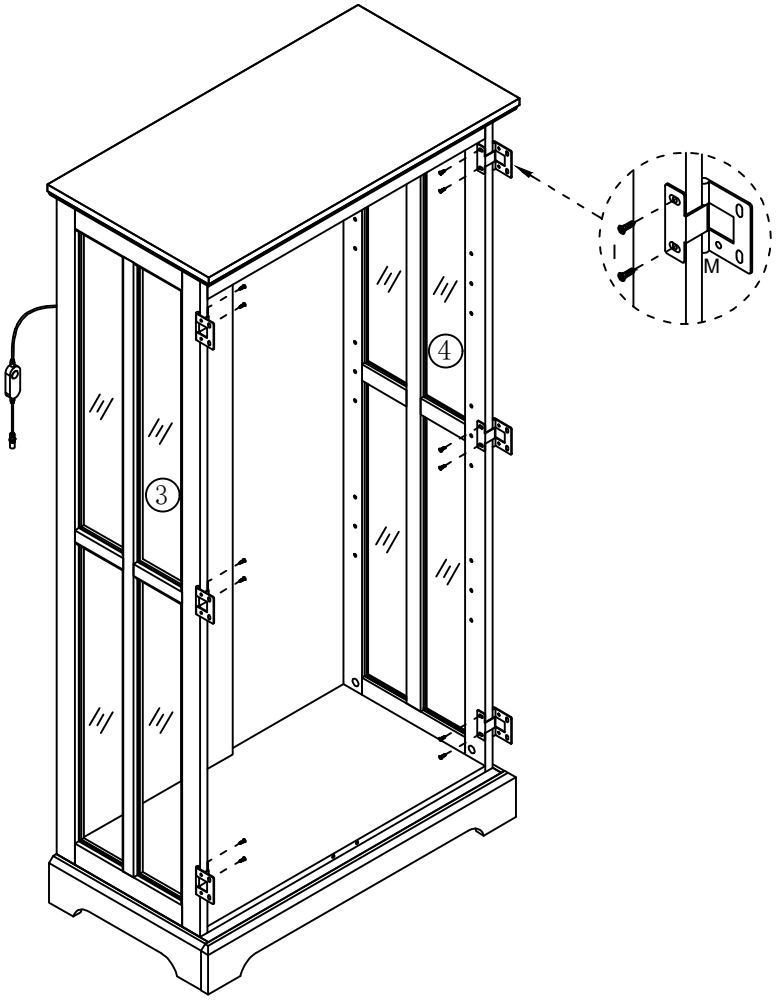

STEP16

K x 12


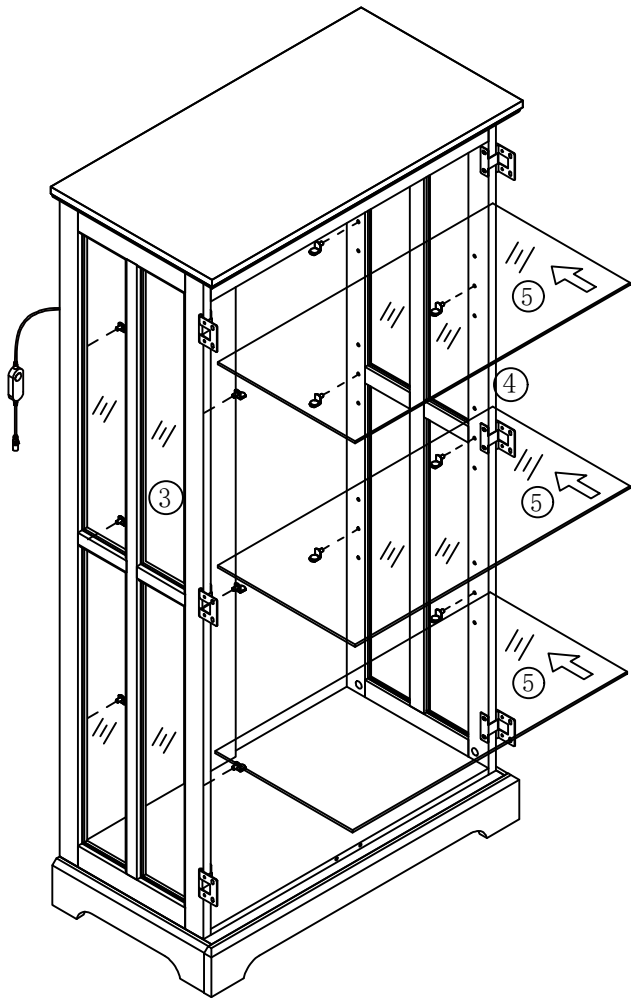

STEP17

F x 2
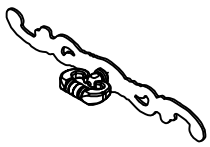
G x 2
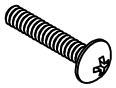 Ø4*25mm
D x 8
 Ø3*12mm
E x 4
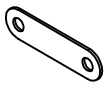

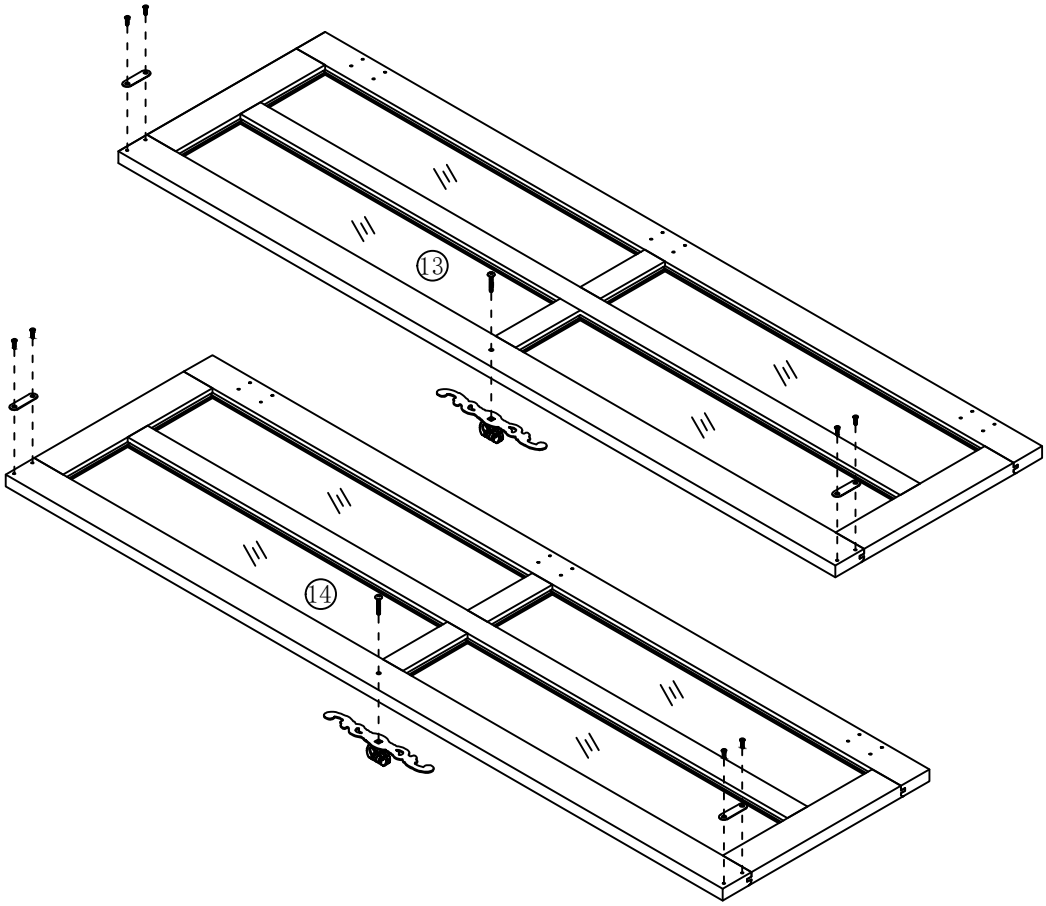

STEP18

I x 24
 Ø3.5*14mm

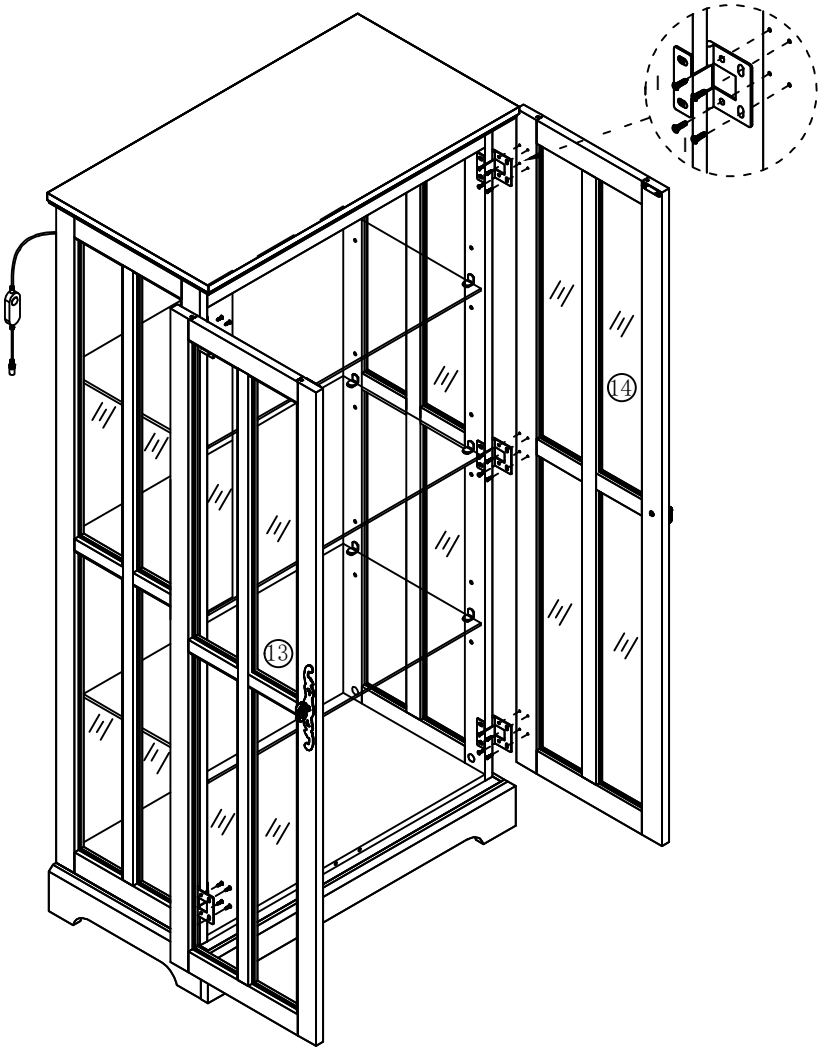

STEP19

N x 2	P X 1	Q X 1
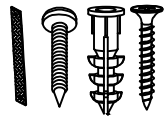	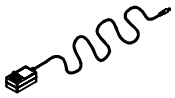	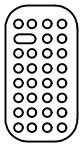

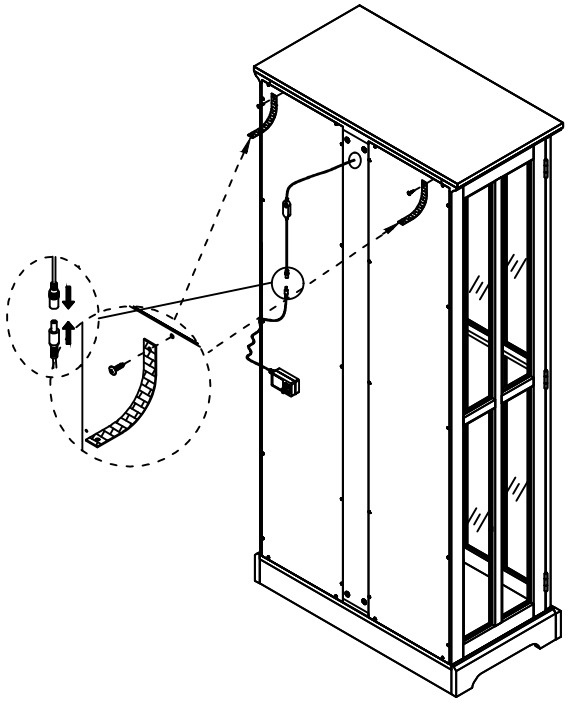

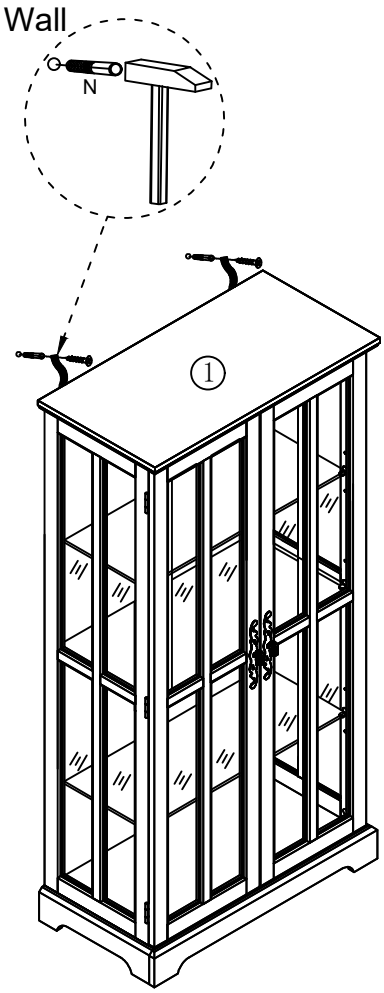

STEP20

