C3960 102 ~ 4″ Henley Traditional CABINET PULL HANDLE

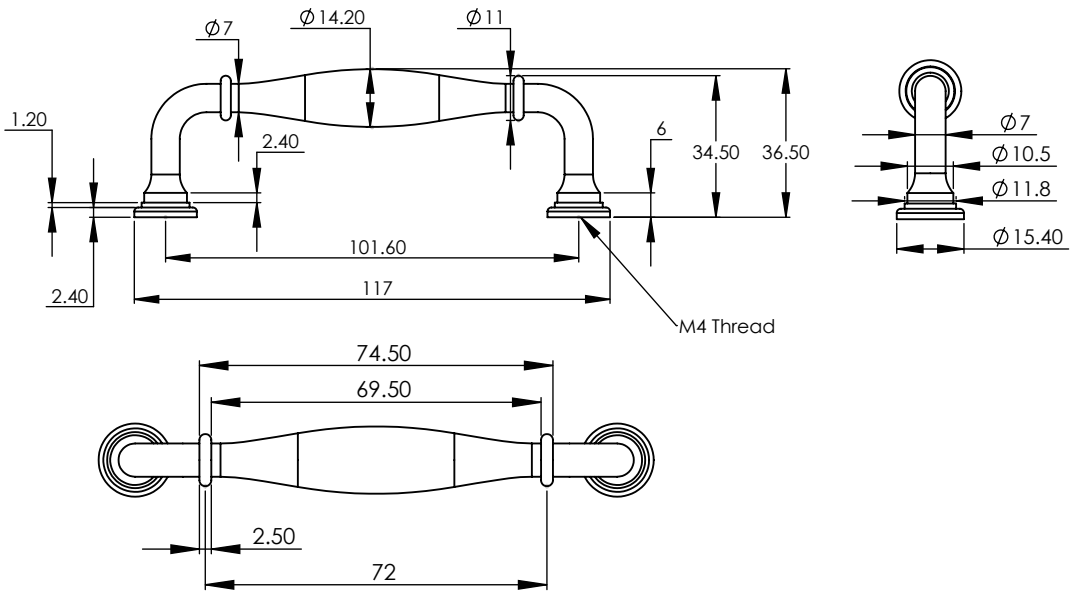

2 Dimensions:
see the outlines given above

3 2x

2x

FINISHES

- ME Matt Bronze finish
- SB Satin Brass finish
- PN Polished Nickel finish
- SN Satin Nickel finish
- AT Antique Brass finish
- SC Satin Chrome finish
- PB Polished Brass finish
- PC Polished Chrome finish

Overview	1 Cabinet Pull illustrated	2 (General dimensions of Cabinet Pull)	3 Supplied with: 2x 30mm Machine Screws 2x 35mm Machine Screws

M Marcus Ltd., Dudley

Product Code	Material
C3960 102	Solid Brass

Sizes shown are in mm and approximate. We reserve the right to amend where necessary and without any prior notice.

Property of M Marcus Ltd. ©