MEDICINE CABINET

Installation Guide

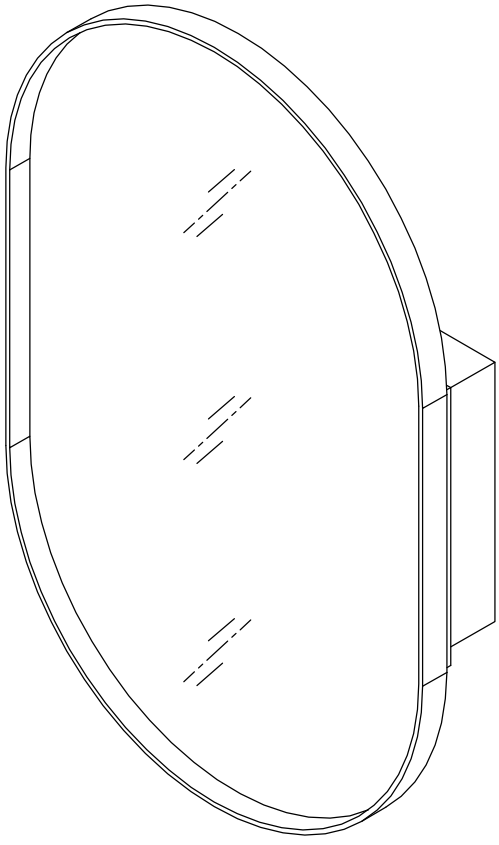

List of Parts

A 8pcs 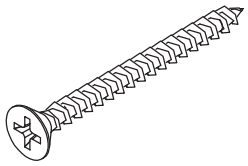 Screws	B 8pcs 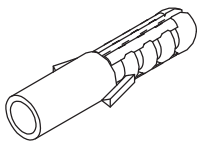 Rubber plug screws	C 8pcs 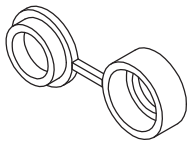 Screw cover
D 8pcs 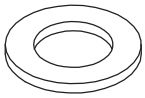 Screw washers	E 8pcs 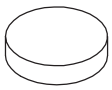 Rubber mat	F 2pcs 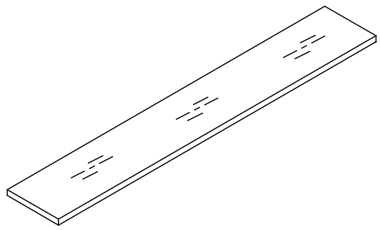 Glass shelf

Please make sure all the parts are included.
Missing parts? Reach out to wf1_us@csbdhome.com for free replacement

Additional Tools Required

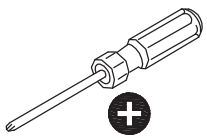

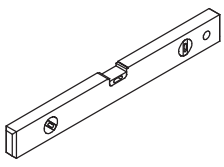
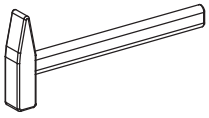
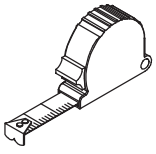
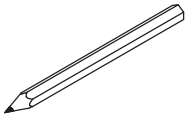

Rough Wall Opening

Overall Size	Rough Wall Opening
21 in.(W) X 34 in.(H) X 4.5 in.(D)	17.7 in.(W) X 19.6 in.(H) X 3.3 in.(D)

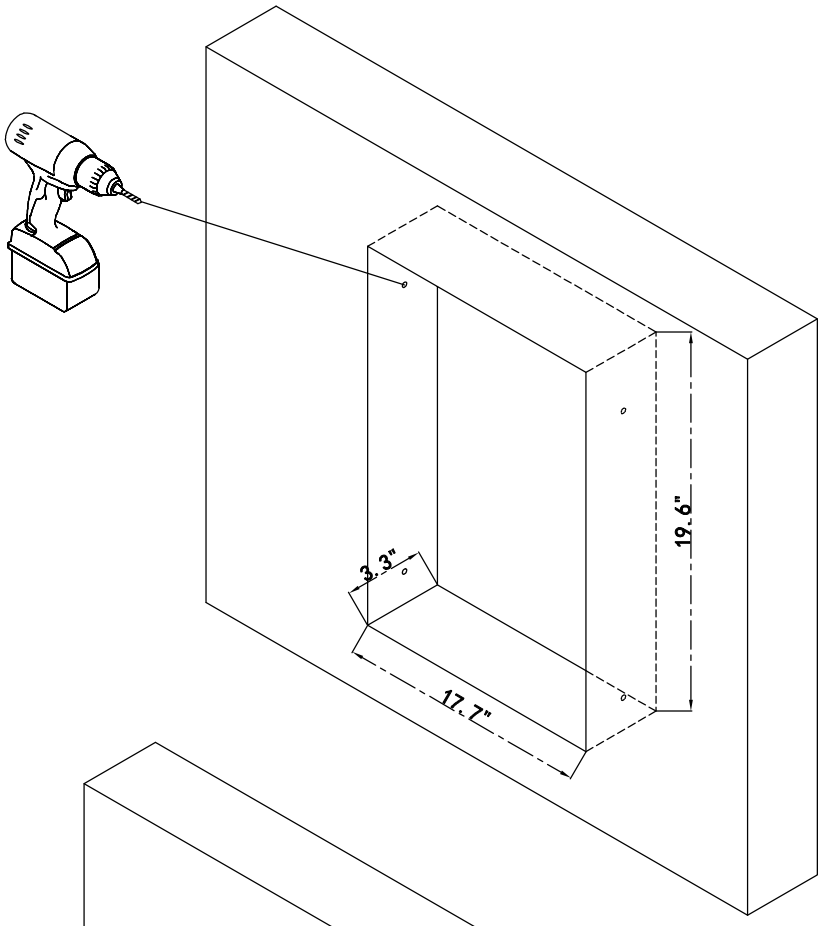

Mark four (4) mounting holes on the wall corresponding tothe pre-drilled hole lo cations in the mounting bars on theinside back panel of the cabinet.

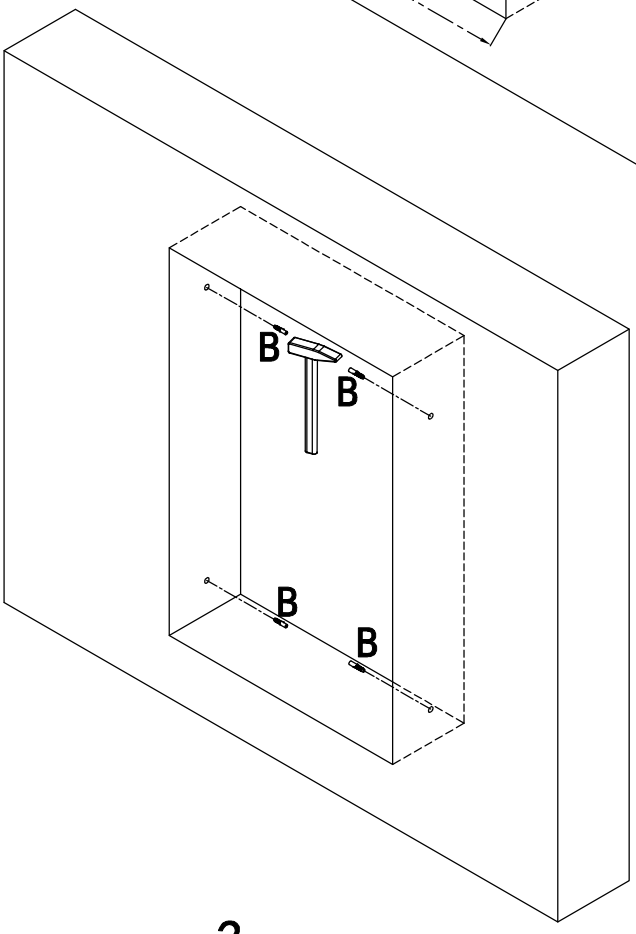

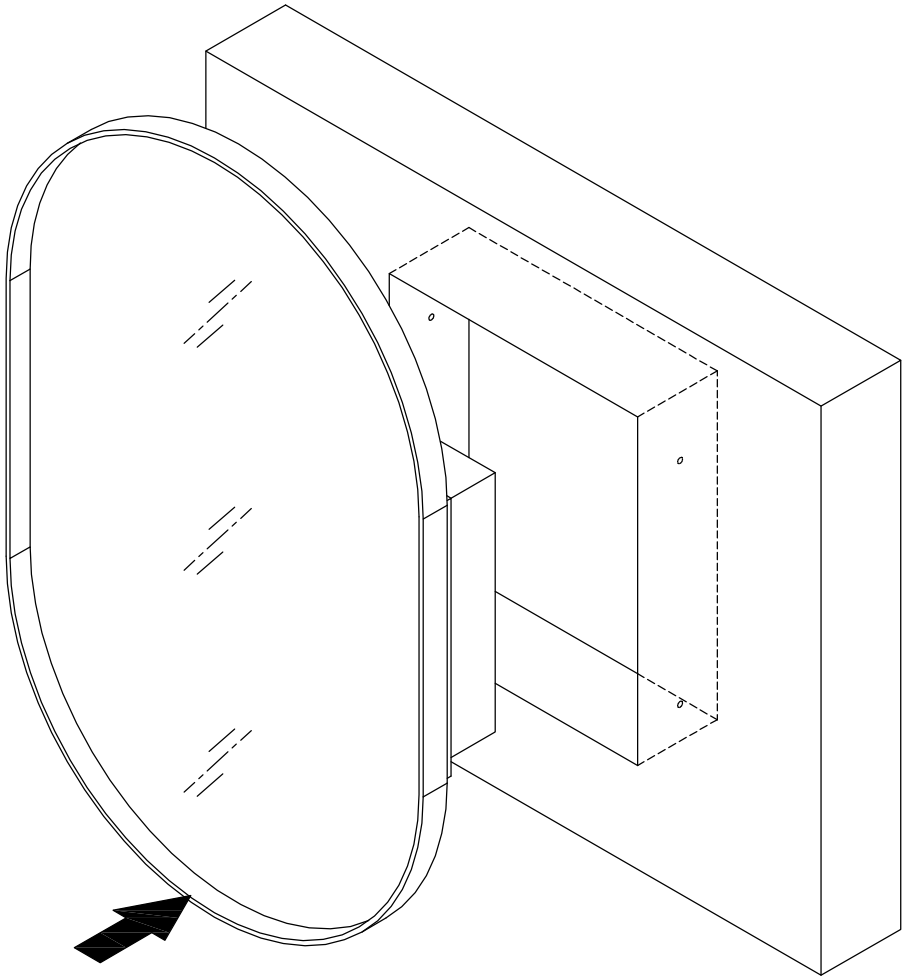

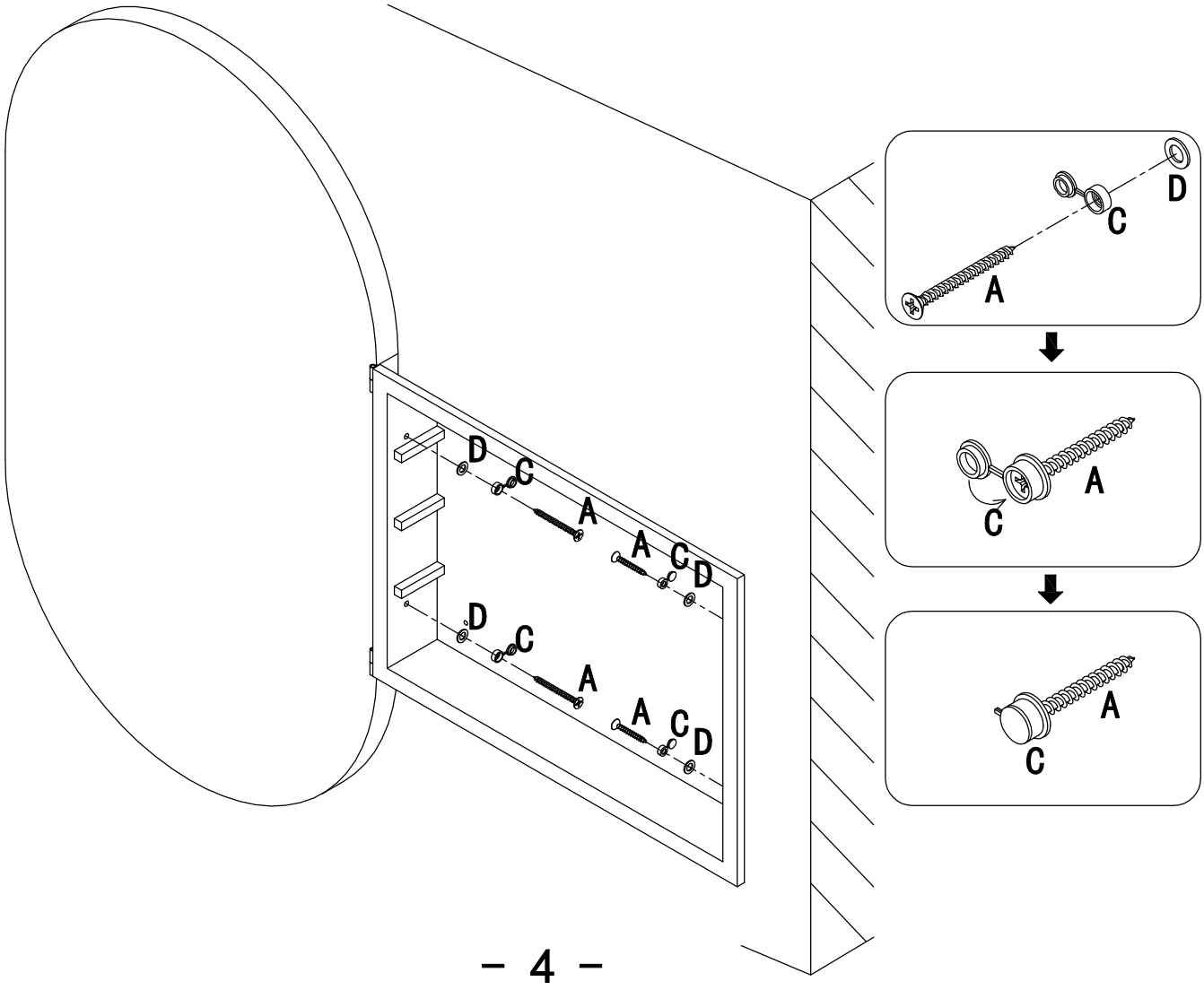
D
C
A
A
C
D
D
C
A
A
C
D
D
C
A
C
A
C
A

Surface installation

Mark four (4) mounting holes on the wall corresponding tothe pre-drilled hole lo cations in the mounting bars on theinside back panel of the cabinet.

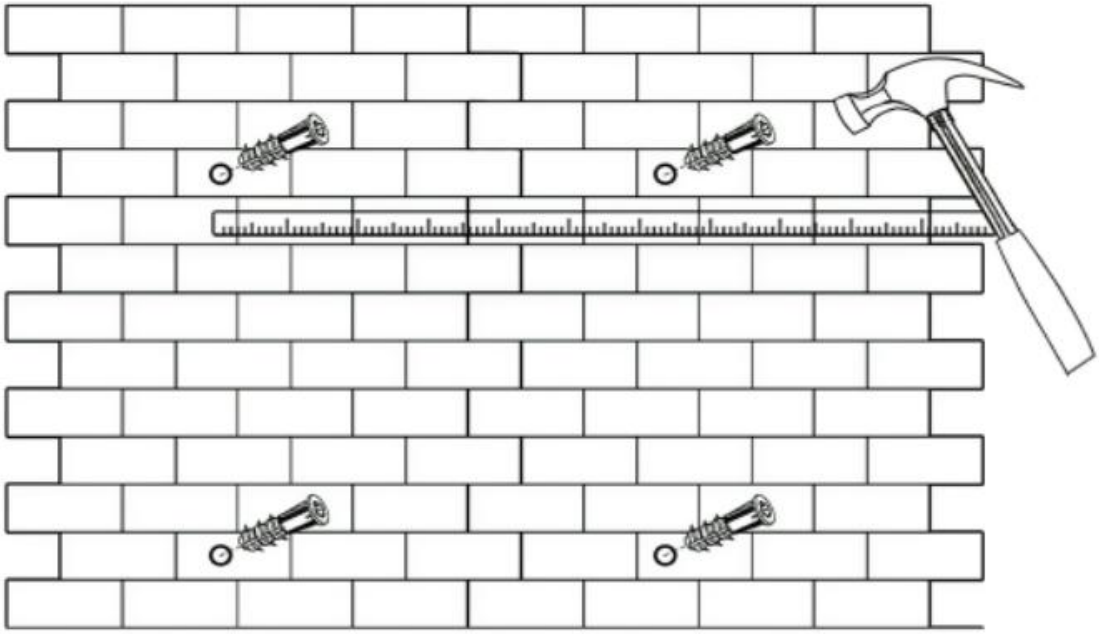

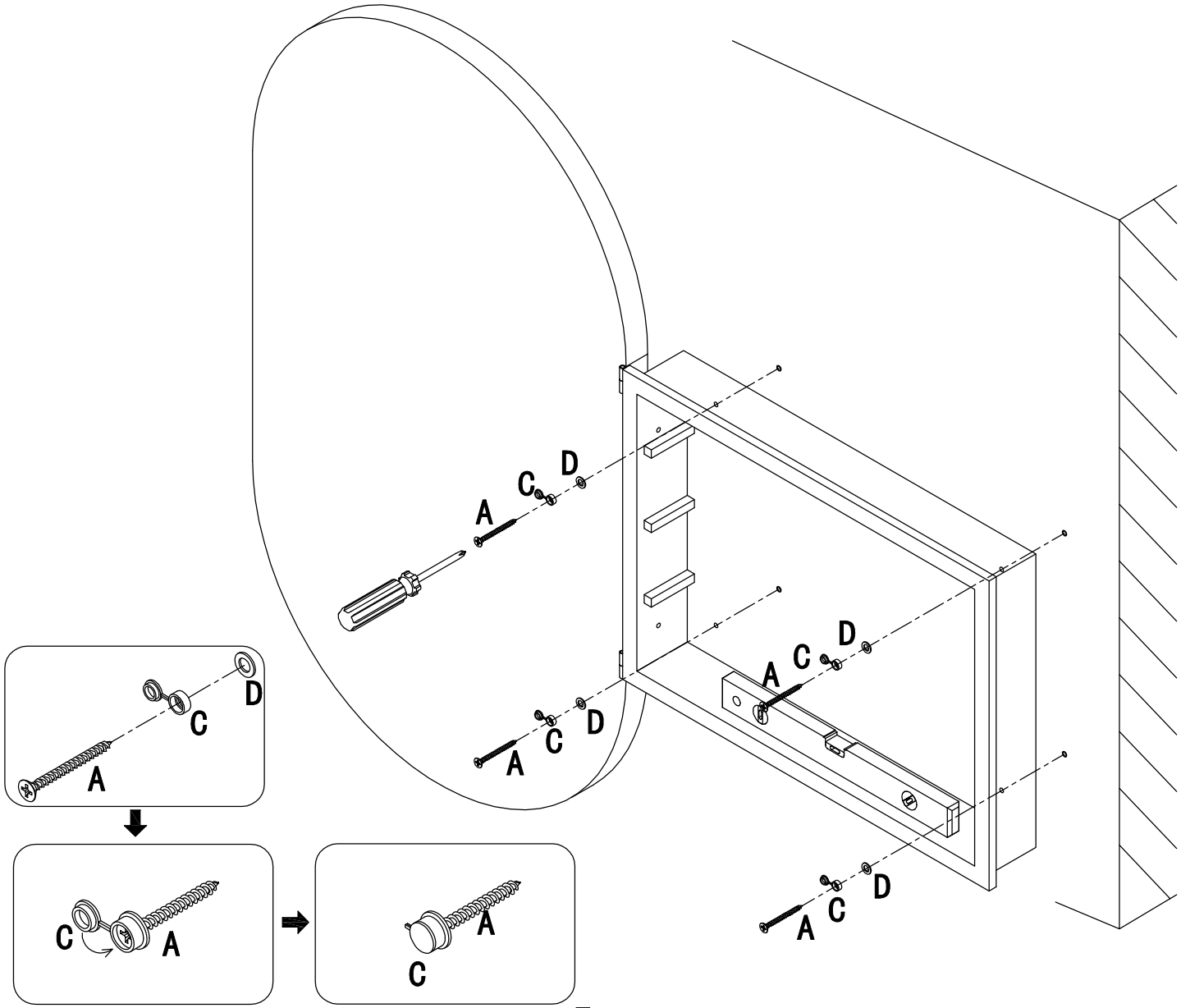

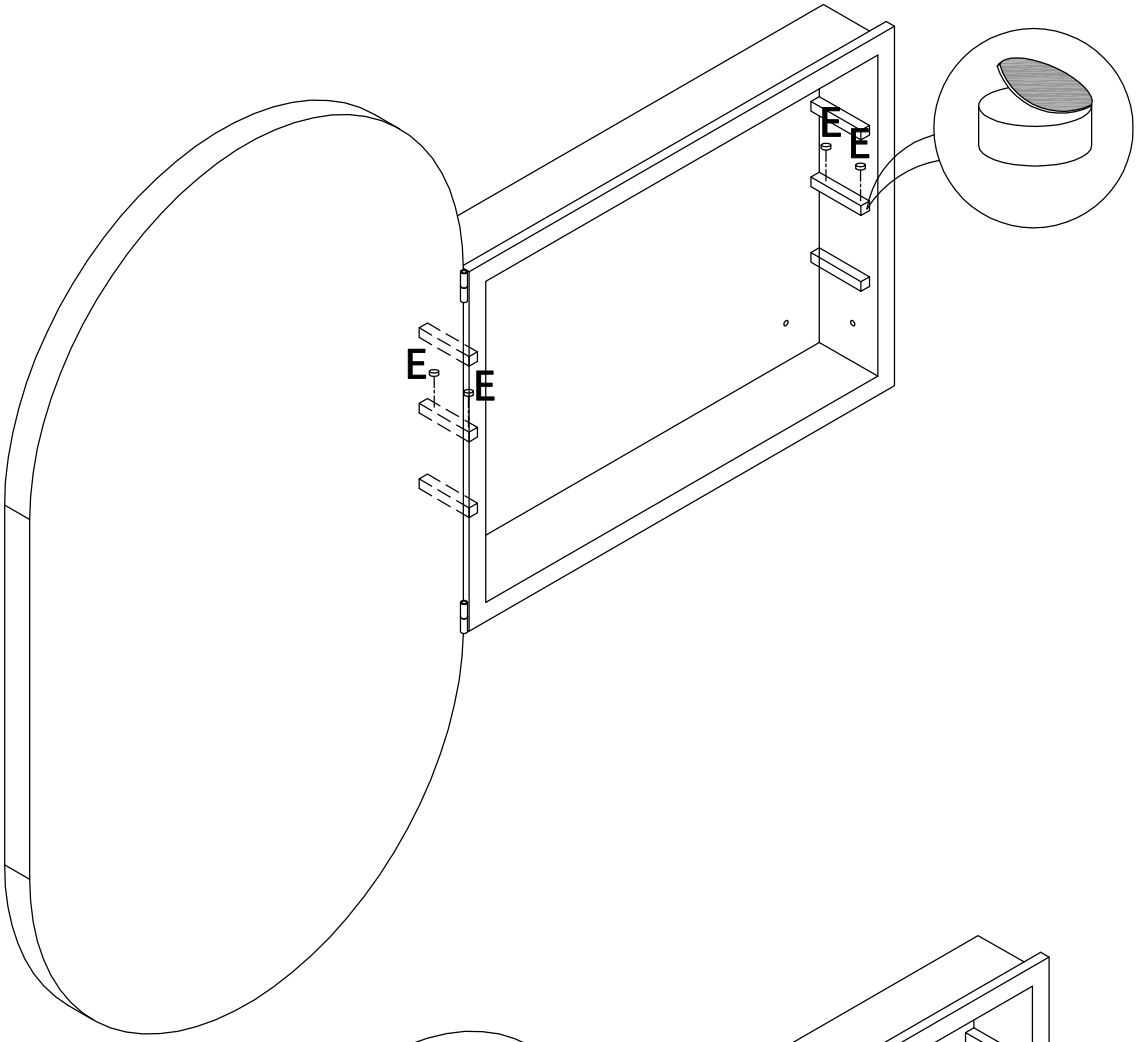
E
E
E
E

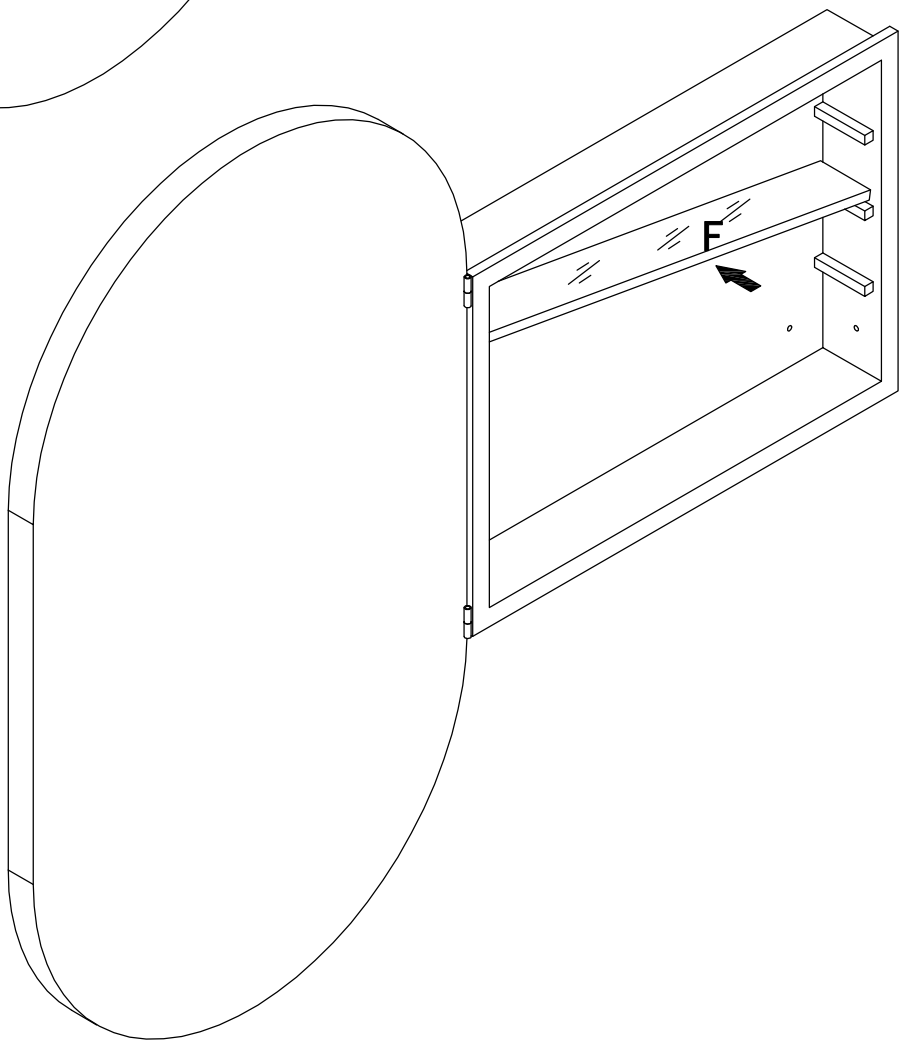
F