Edubebo

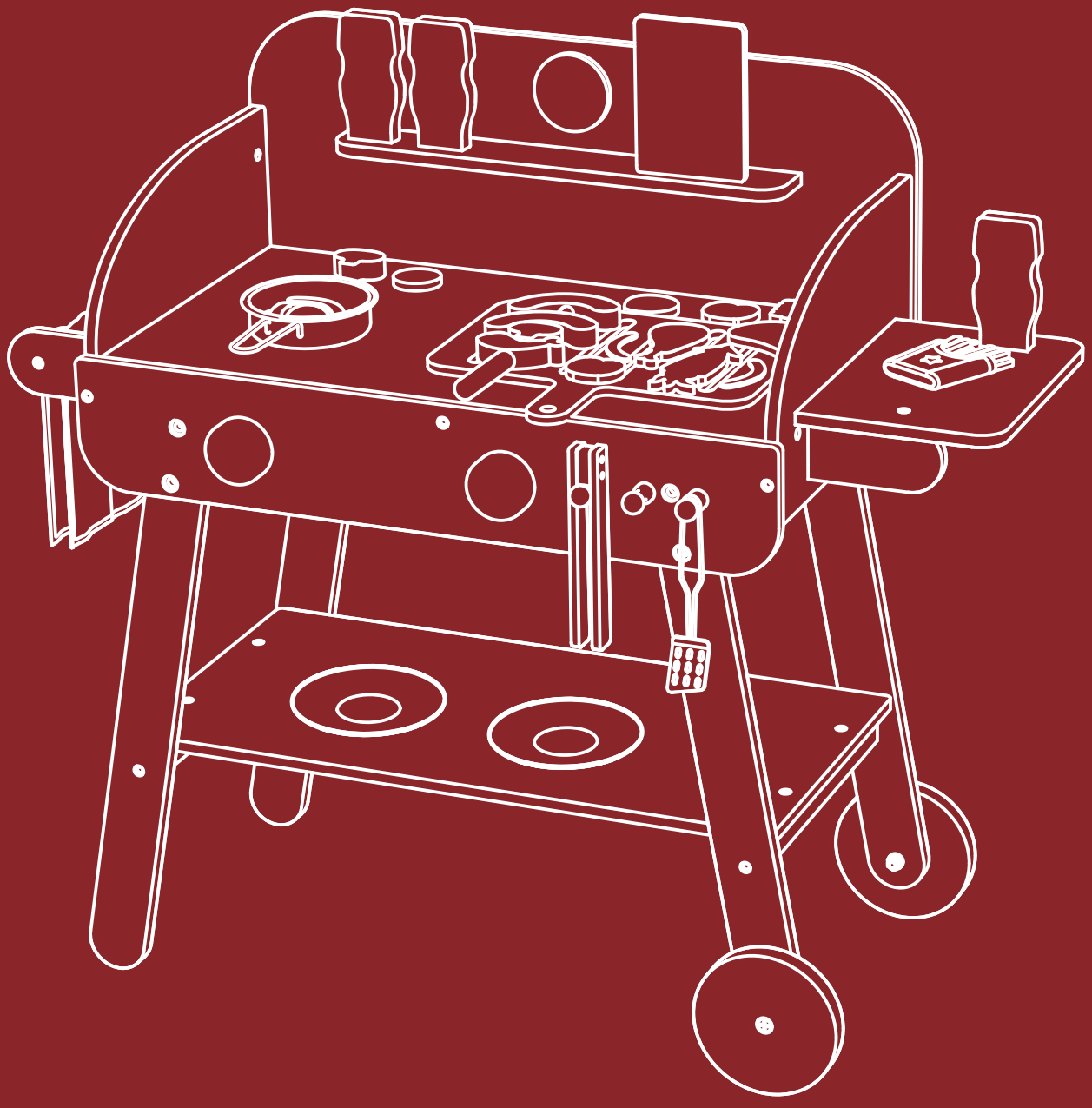

INSTRUCTION MANUAL

Kid Cook Grill

3 YEARS +

⚠ WARNING

ADULT ASSEMBLY REQUIRED

⚠ WARNING

CHOKING HAZARD - Small parts.
Not for children under 3 years old.

ⓘ NOTICE

Please retain these instructions for future reference.





- This product requires adult assembly and supervision when in use.
- Do not stand on or use any part of this item as a step ladder.
- Firmly secure all bolts, screws and knobs before use.
- Reconfirm that all bolts, screws, and knobs are secure every 90 days.
- Do not use or store this item in the proximity of open flame or flammable/combustible chemicals.
- If any parts are missing, broken, damaged, or worn, stop using this item until repairs are made and/or factory replacement parts are installed.
- Do not use this item in a way inconsistent with the manufacturer's instructions as this could void the product warranty.
- This product contains small parts. May result in choking hazard for children under 3 years.
- To wipe down item, use a damp cloth. Then, wipe it down once more with a dry cloth.
- This product is intended for residential use only.
- Caution: Ensure that your child never stands or sits on this item.

AGE RANGE: 3 years old and up

TOOLS REQUIRED



PHILLIPS SCREWDRIVER



HAMMER (OPTIONAL)

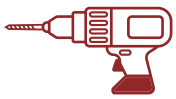

DRILL (OPTIONAL)



AGE RANGE: 3 YEARS OLD & UP



1 PERSON ASSEMBLY



UP TO 90 MIN. ASSEMBLY

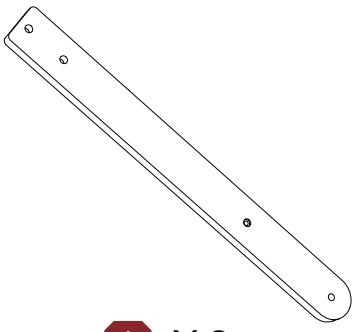

1 X 2pcs

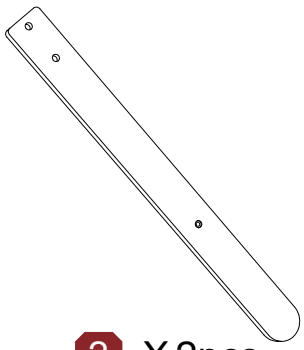

2 X 2pcs

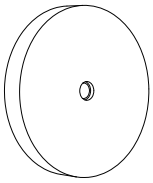

3 X 2pcs

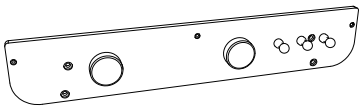

4 X 1pc

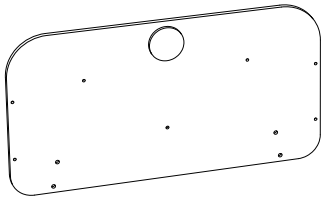

5 X 1pc

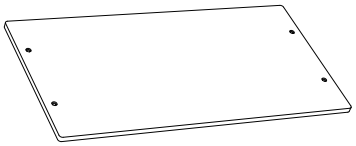

6 X 1pc

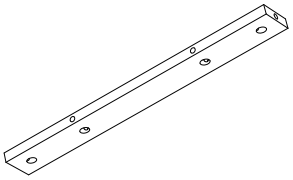

7 X 2pcs

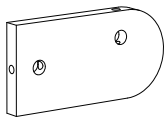

8 X 1pc

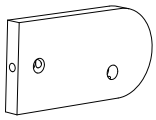

9 X 1pc



10 X 1pc

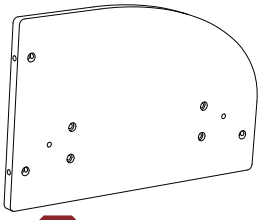

11 X 1pc

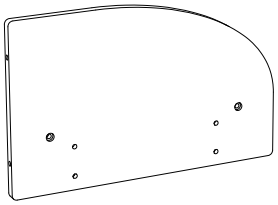

12 X 1pc

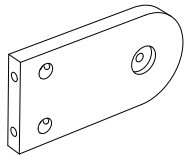

13 X 2pcs

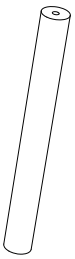

14 X 1pc

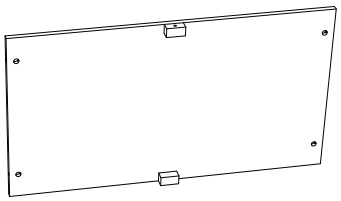

15 X 1pc

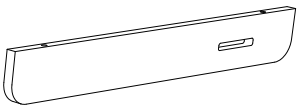

16 X 1pc



a X 32pcs



b X 2pcs

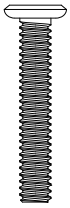

c X 2pcs

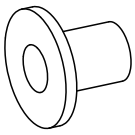

d X 2pcs

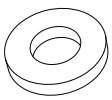

e X 2pcs

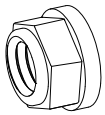

f X 2pcs



g X 8pcs



h X 8pcs

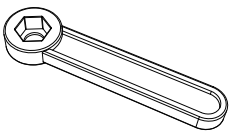

i X 1pc



1 pc

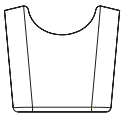

1 pc

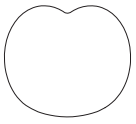

2 pcs



10 pcs

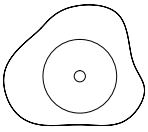

1 pc

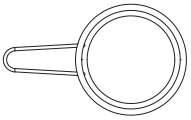

1 pc

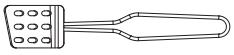

1 pc



4 pcs



1 pc

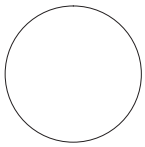

2 pcs

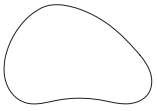

1 pc

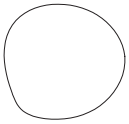

2 pcs

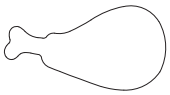

1 pc



1 pc



2 pcs

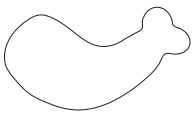

1 pc

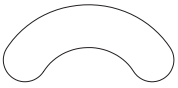

2 pcs



1 pc

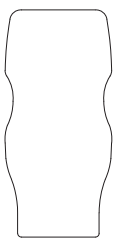

3 pcs



1 pc

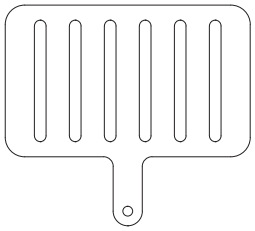

1 pc

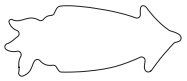

1 pc

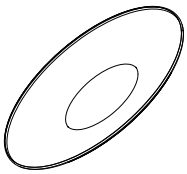

2 pcs

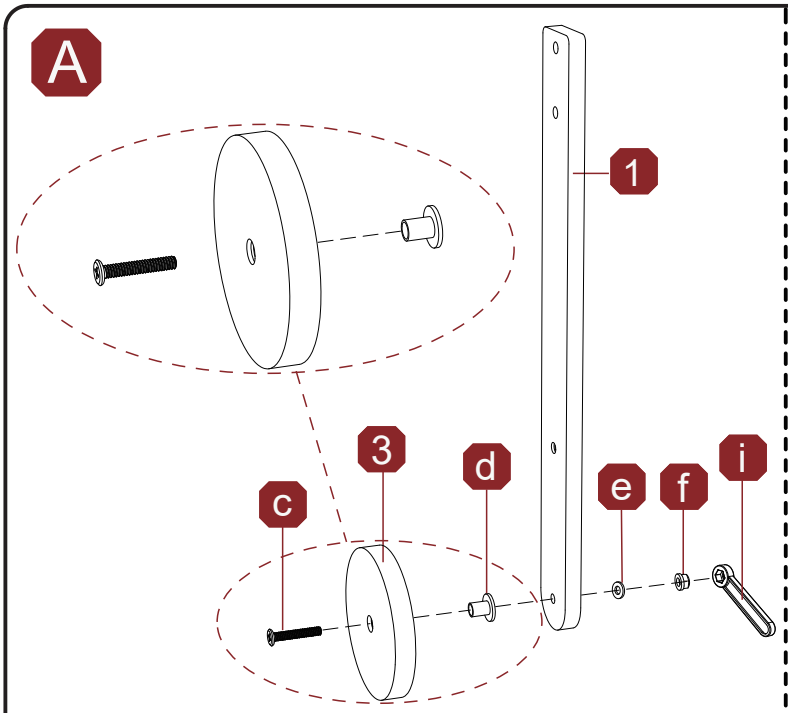
A
1
3
c
d
e
f
i

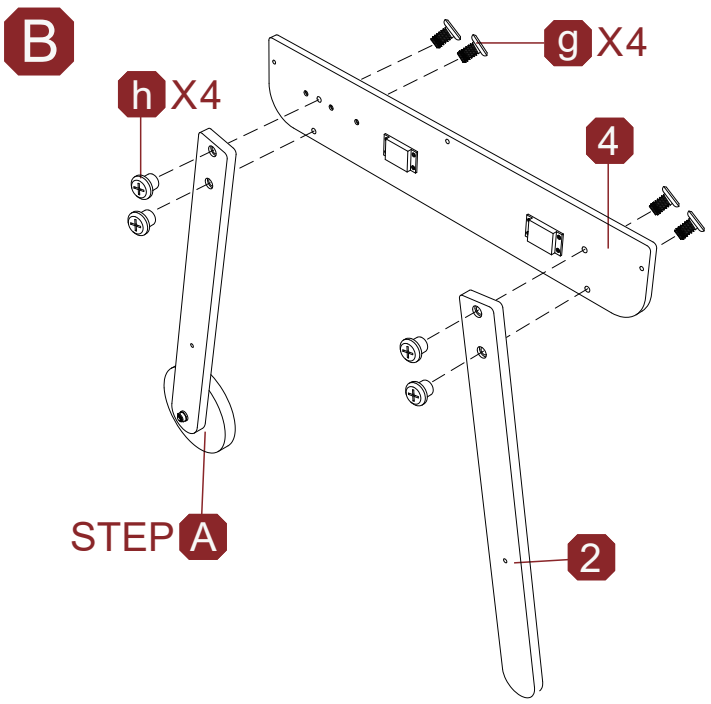
B
g X4
h X4
4
STEP A
2

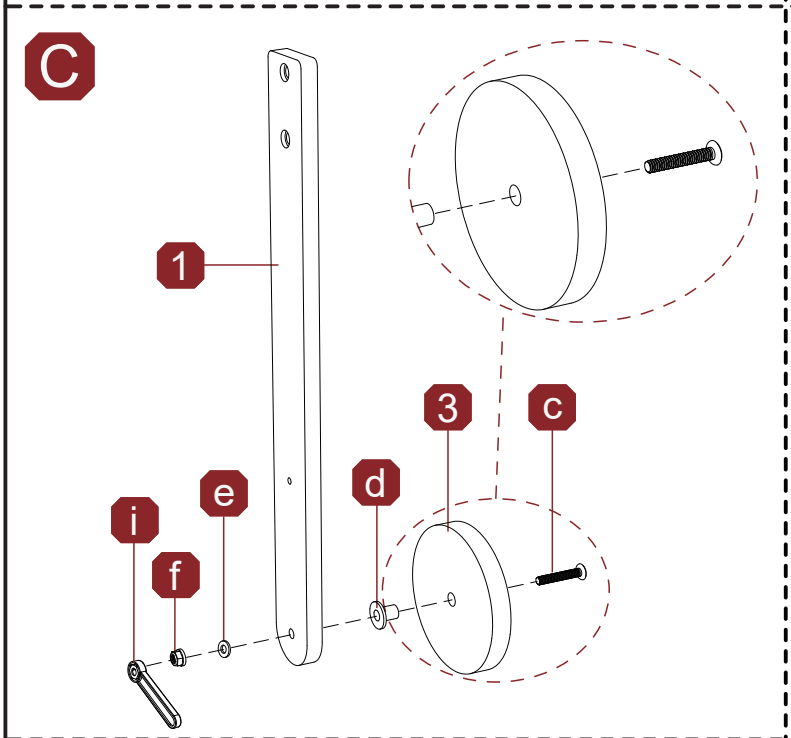
C
1
3
c
d
e
i
f

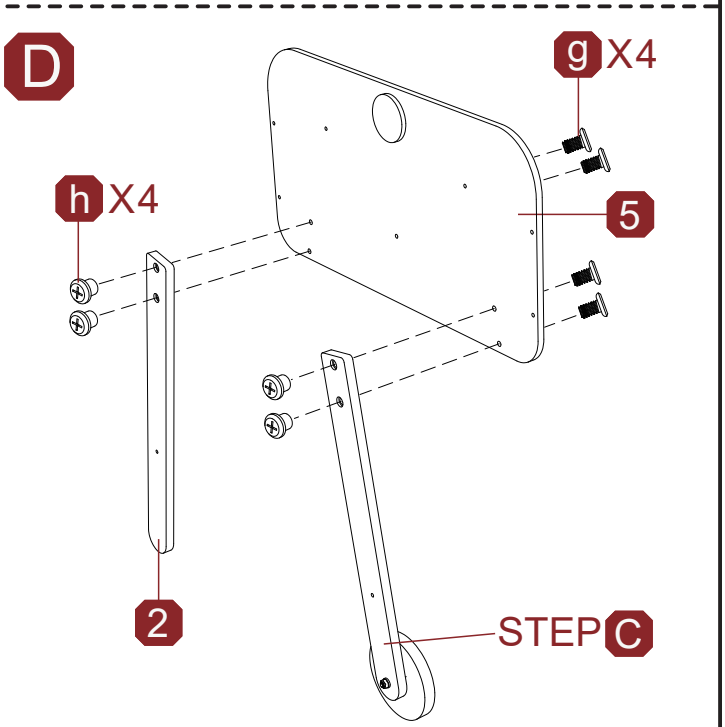
D
g X4
h X4
5
2
STEP C

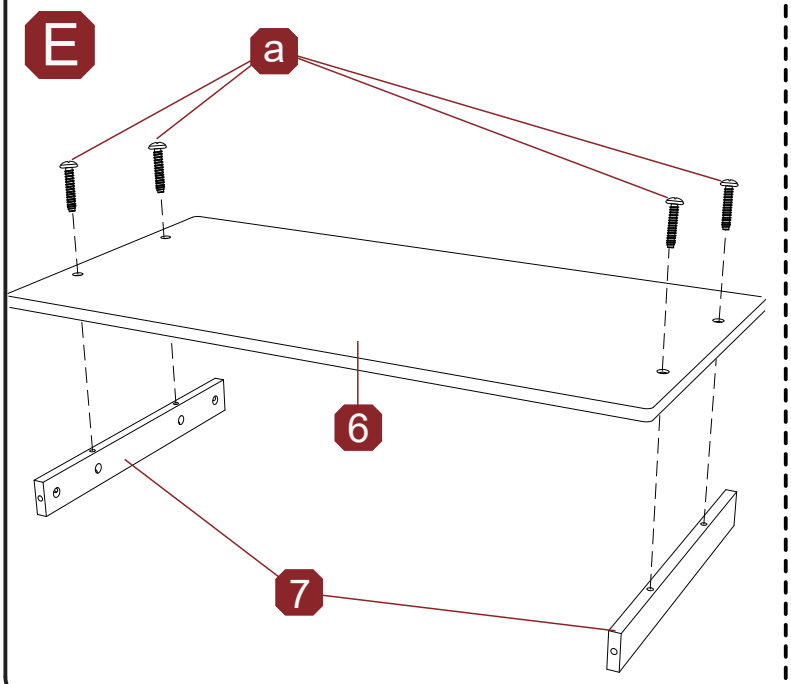
E
a
6
7

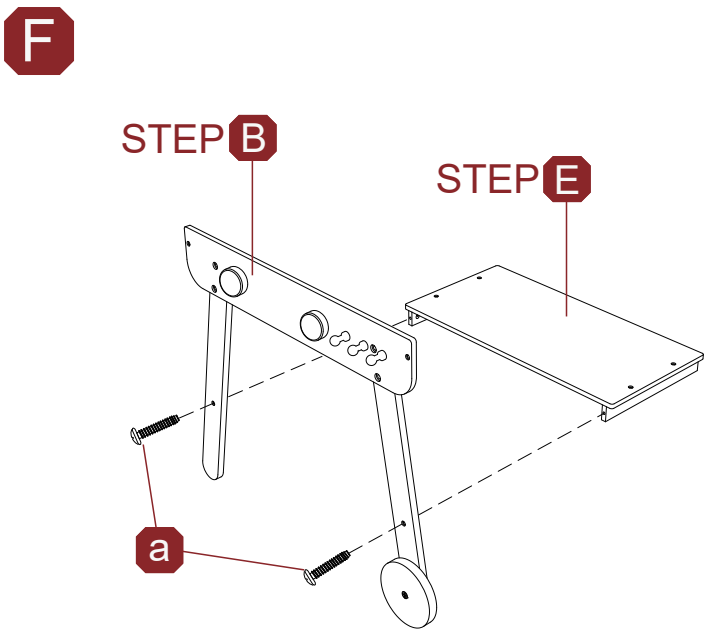
F
STEP B
STEP E
a

G

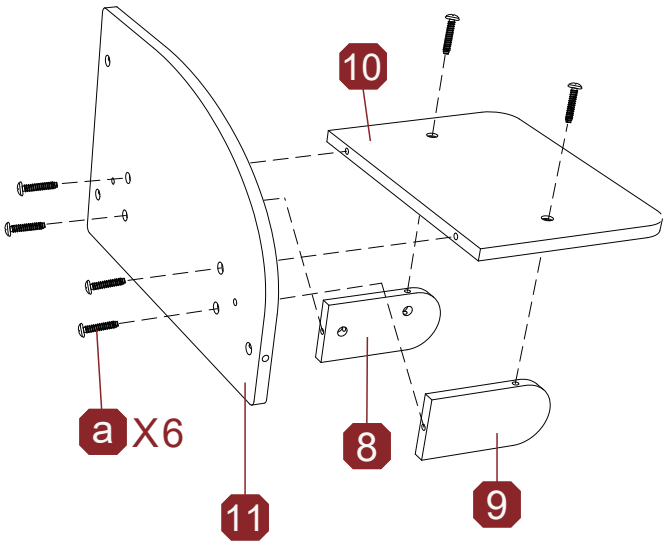

H

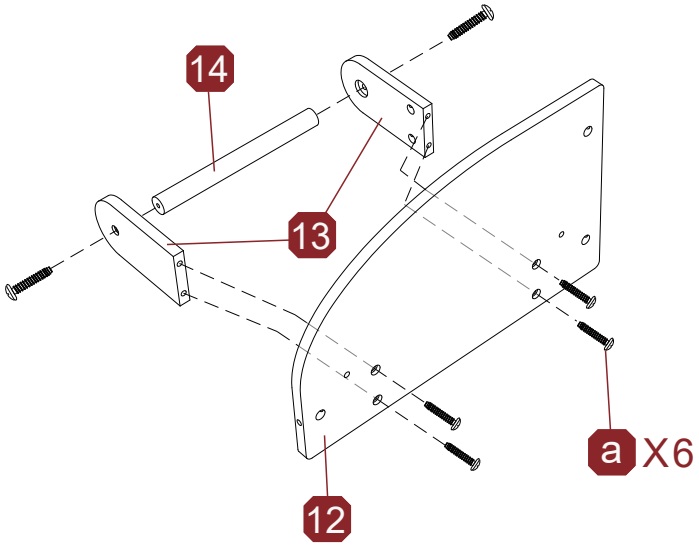

I

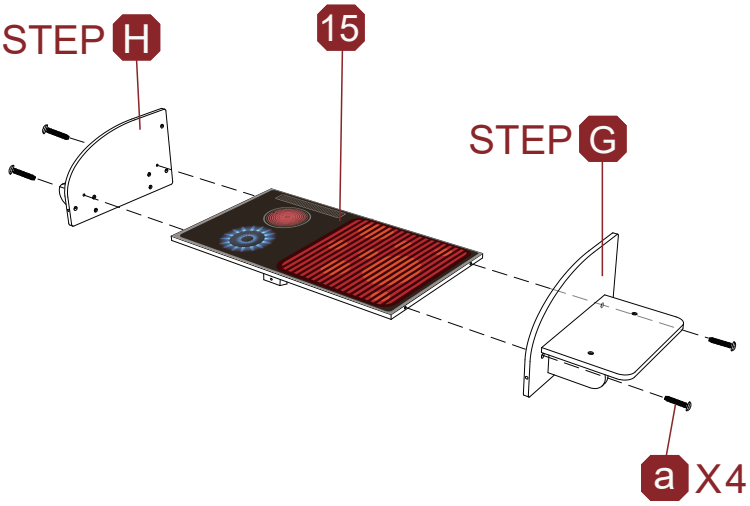

J

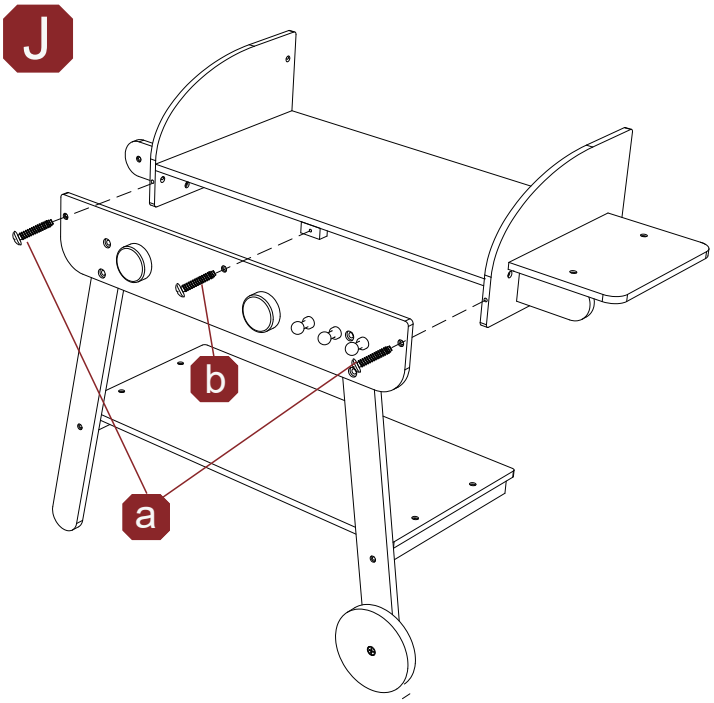

K

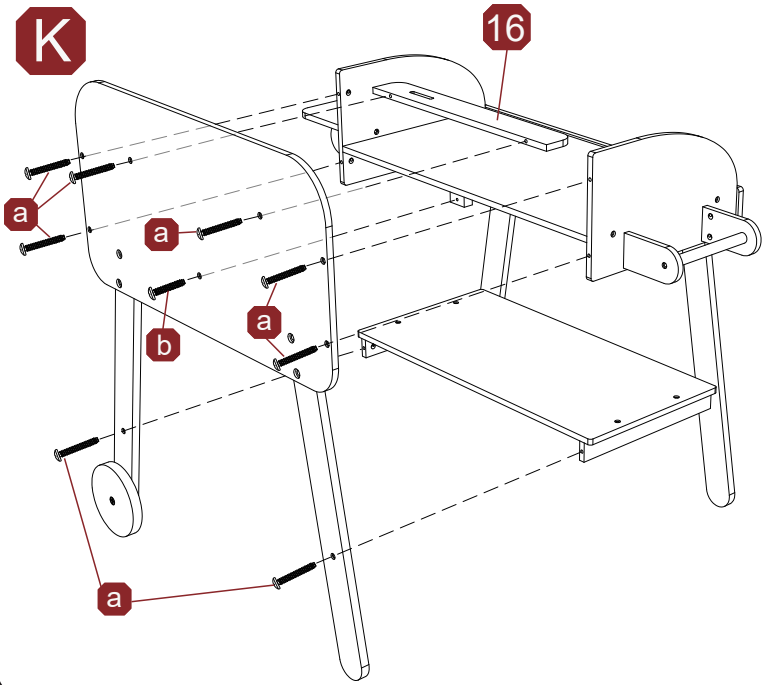

L

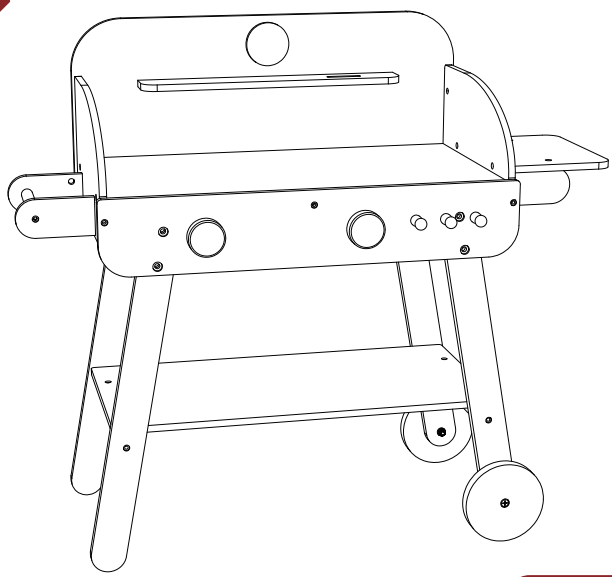

HELP CENTER

Question about your product? We're here to help. Visit us at:

https://www.amazon.com/stores/EDUBEBO/page/FB16FFA6-B6BA-4461-B442-DB85AD204A87?lp_asin=B0DM8RB25J&ref_=ast_bln&store_ref=bl_ast_dp_brandLogo_sto



Chat Support


Product Inquiry


Orders FAQ

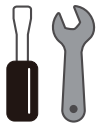
Product Assembly


Returns & Refunds

PRODUCT WARRANTY INFORMATION

All items can be returned for any reason within 60 days of the receipt and will receive a full refund as long as the item is returned in its original product packaging and all accessories from its original shipment are included. All returned items will receive a full refund back to the original payment method. All returned items will not be charged a re-stocking fee.

All returned items require an RA (Return Authorization) number, which can only be provided by a EDUBEBO Customer Service Representative when the return request is submitted. Items received without an RA may not be accepted or may increase your return processing time. Once an item has been received by EDUBEBO, refunds or replacements will be processed within 5 business days.

All returns must be shipped back to the EDUBEBO Return Center at the customer's expense. If the reason for return is a result of an error by EDUBEBO will provide a pre-paid shipping label via email. Boxes for return shipping will not be provided by EDUBEBO,and is the customer's responsibility to either use the original shipping boxes or purchase new boxes.

Pictures may be required for some returns to ensure an item is not damaged prior to its return. Items returned are not considered undamaged until they are received by EDUBEBO and verified as such. All damages to items are the customer's responsibility until the item has been received by and acknowledge by EDUBEBO as undamaged.

⚠WARNING

Manufacturer and seller expressly disclaim any and all liability for personal injury, property damage or loss, whether direct, indirect, or incidental, resulting from the incorrect attachment, improper use, inadequate maintenance, unapproved modification, or neglect of this product.
Do not mix old and new batteries.
Do not mix alkaline, standard (carbon-zinc), or re- chargeable batteries.