KS4461,2,5,8FL

Widespread Twin Handles Lavatory Faucet with Pop-Up
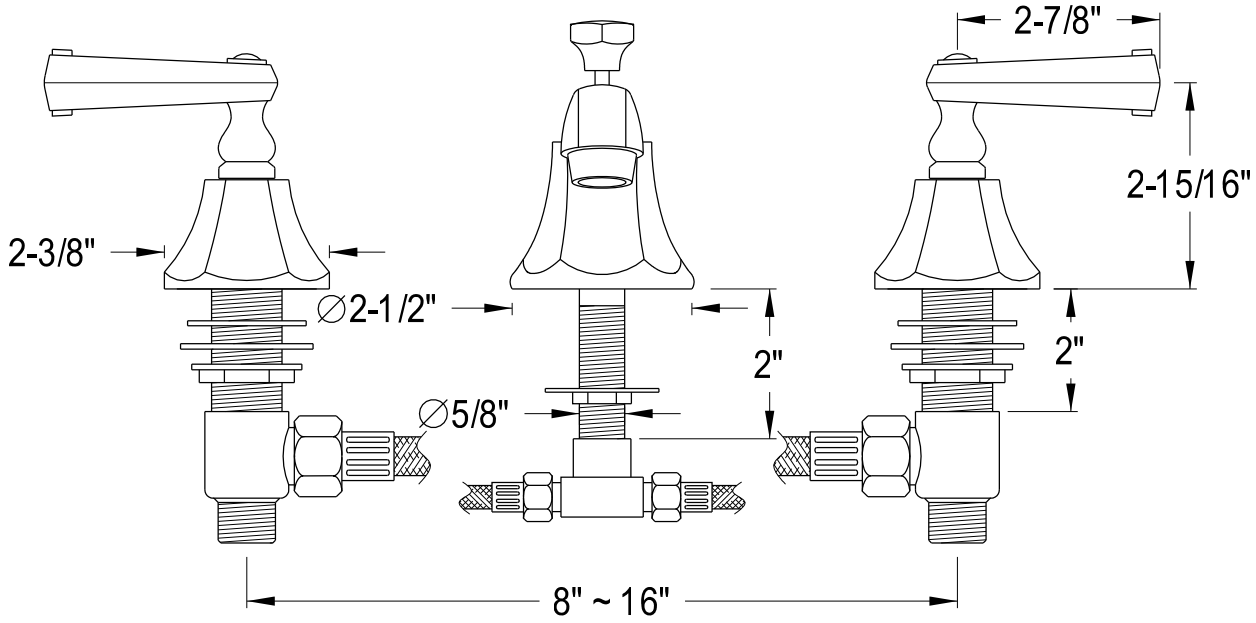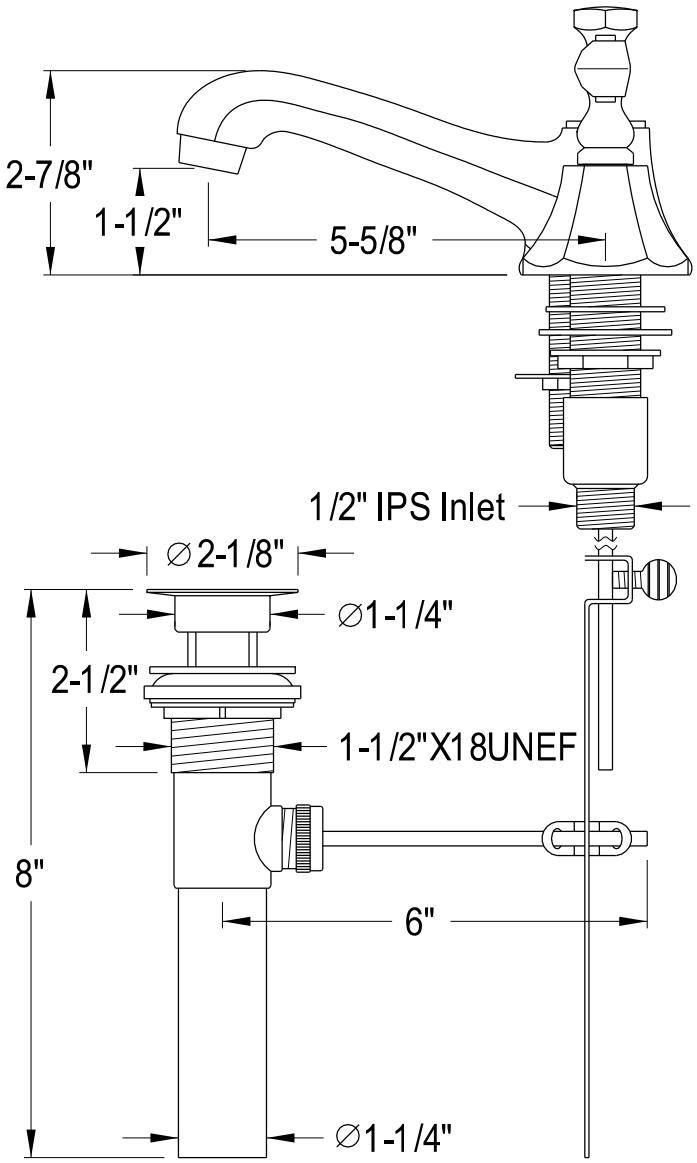
2009-03-A