STEP 3 3

Right door panel splicing

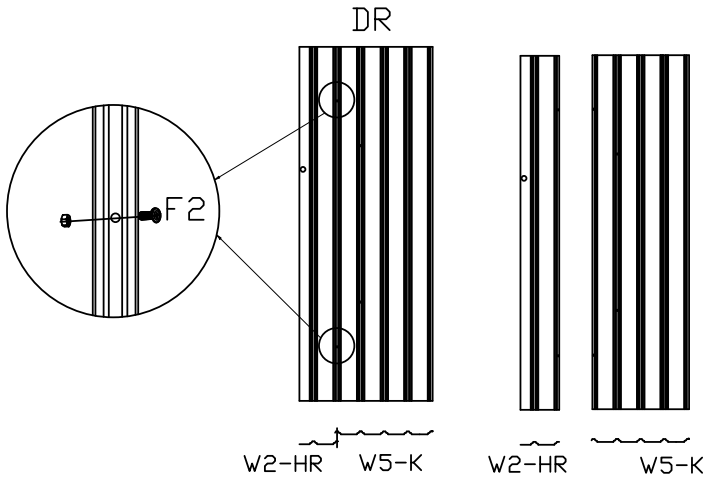

PART	NO.	QTY.
	W5-K	1
	W2-HR	1
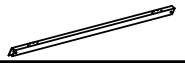	DAP	1
	DRA	1
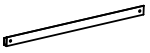	DDA	2
	F1	4
	F2	2

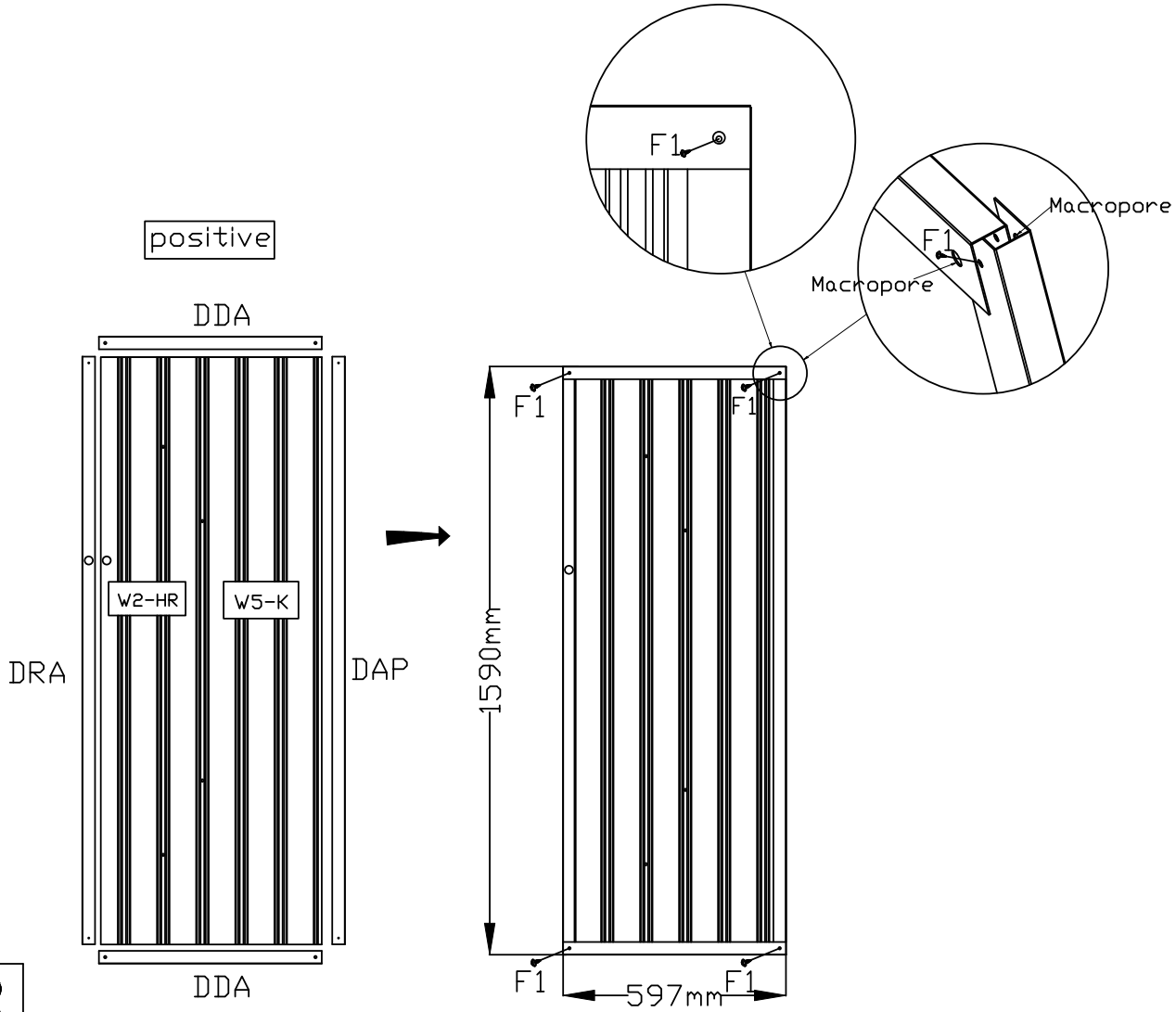

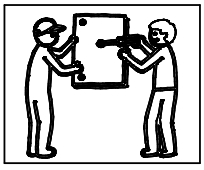

This step requires two people to complete the installation together.

STEP 3 4

Right door panel splicing

PART	NO.	QTY.
	DBA	2
	F1	5
	F2	2

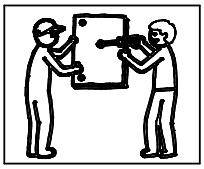

This step requires two people to complete the installation together.

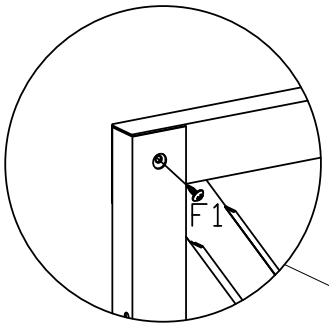

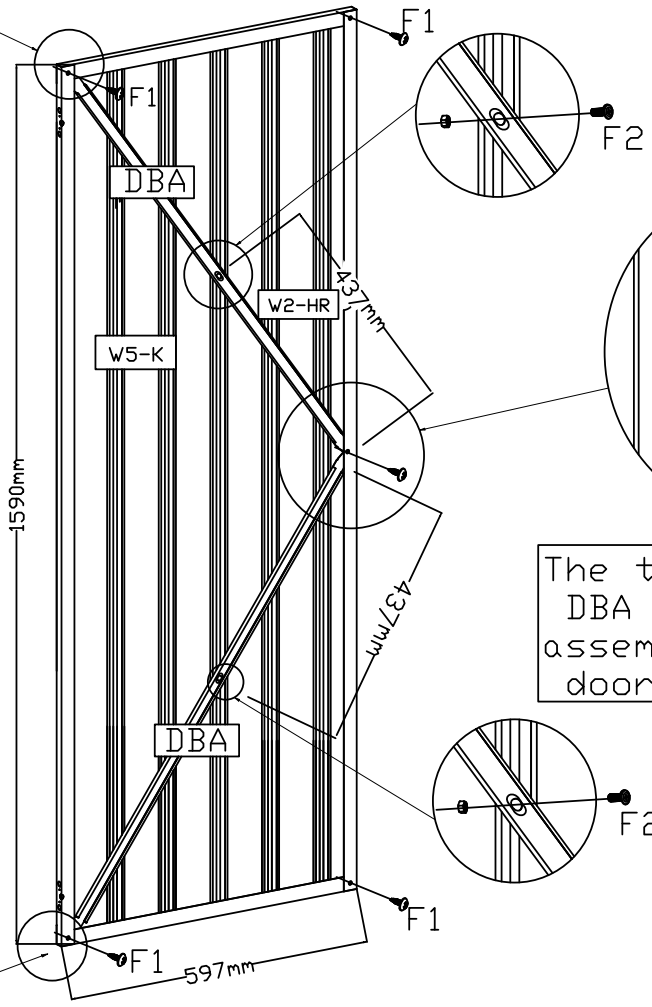

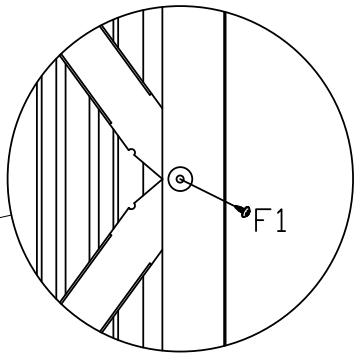

The two ends of the DBA crossbar must be assembled inside the door frame

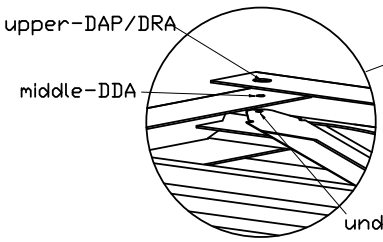

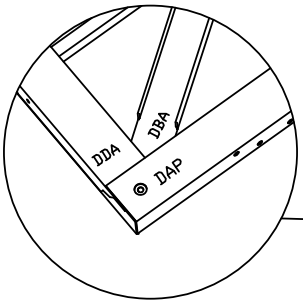

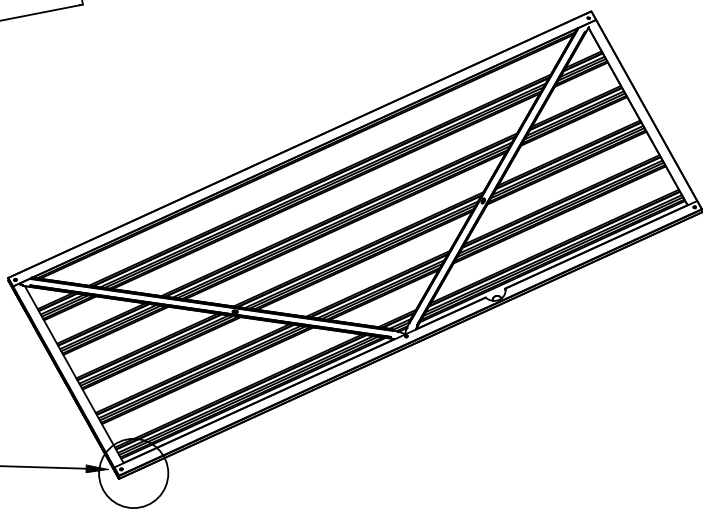

STEP 3 5

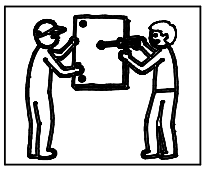

This step requires two people to complete the installation together.

PART	NO.	QTY.
	DJ	4
	DC	2
	GL	1
	F1	12

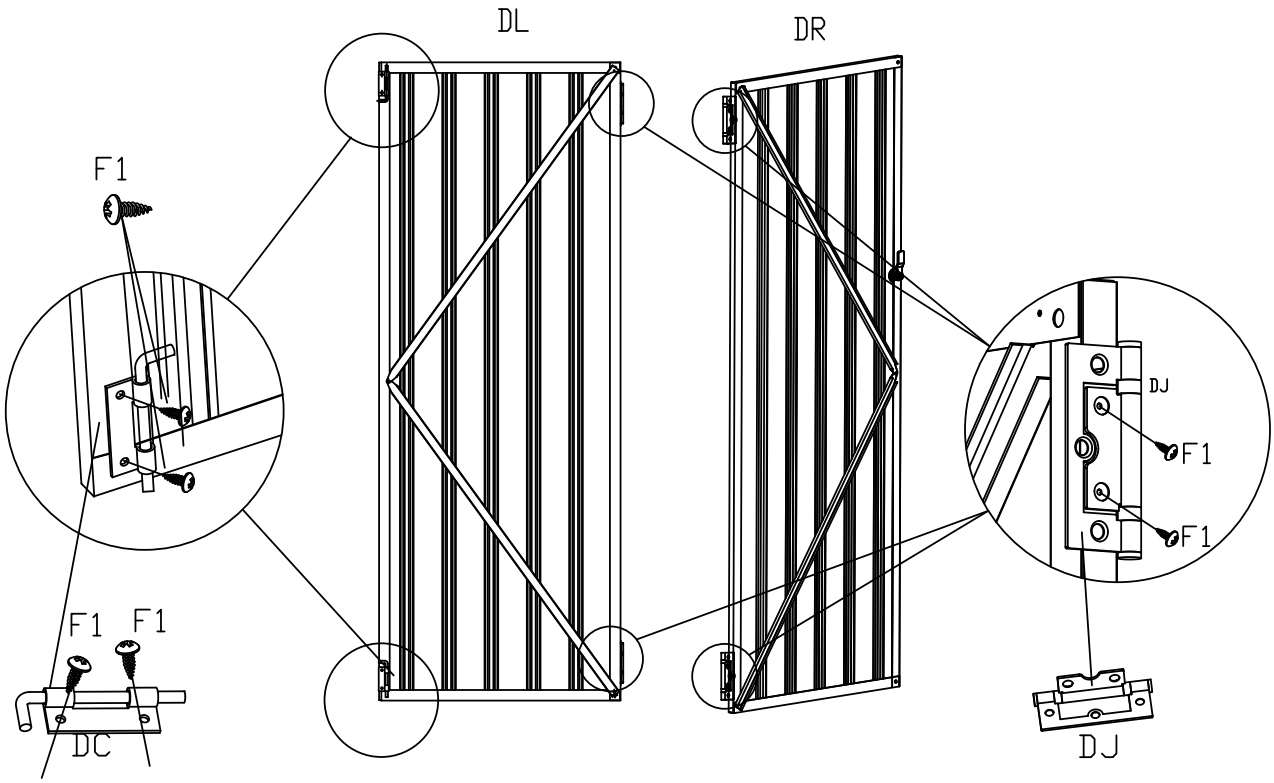

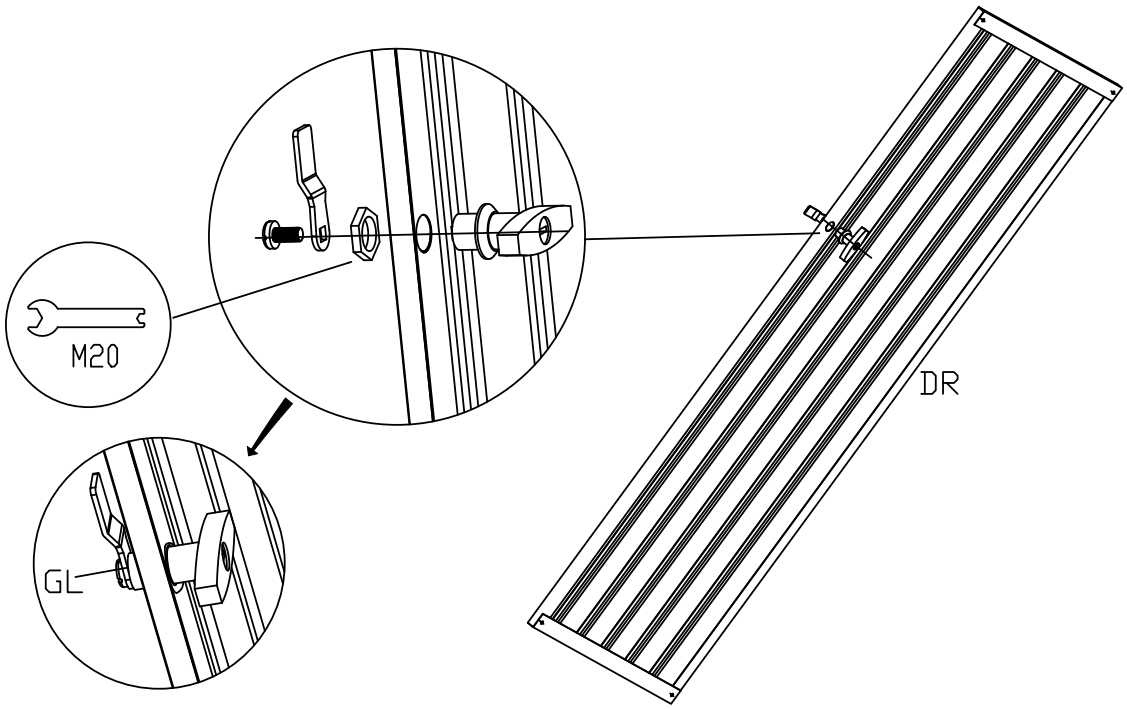

STEP 3 6

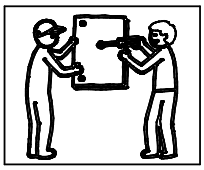

This step requires two people to complete the installation together.

PART	NO.	QTY.
	DL	1
	DR	1
	F1	12

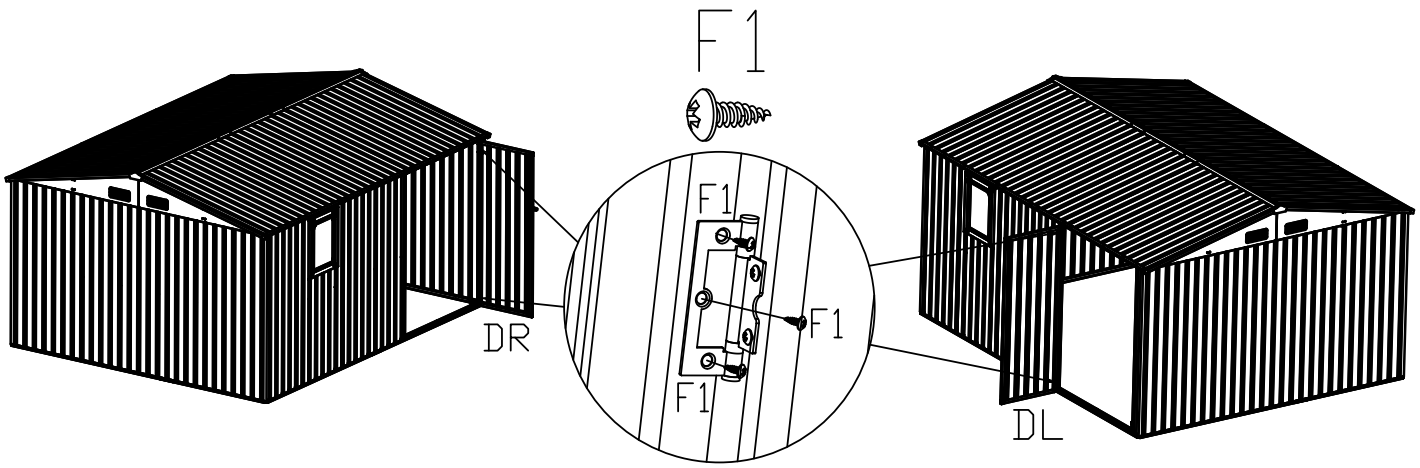

Tear off the 3M adhesive sticker and stick the soft magnetic tape onto the flat surface of the LED light back

PART	NO.	QTY.
	LED	1
	3M adhesive	1

STEP 3 7

PART	NO.	QTY
	SL	98

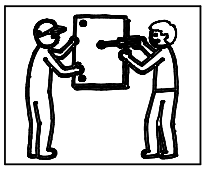

This step requires two people to complete the installation together.

The exposed part of the assembly screw of the upper crossbeam support rod K1012-11 needs to be covered with a plastic protective cap.

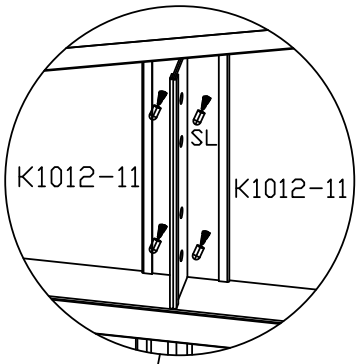

The exposed parts of the assembly screws for the upper crossbeam K812-6L/K812-6M/K812-6R need to be covered with plastic protective caps.

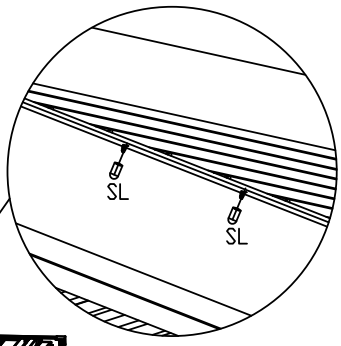

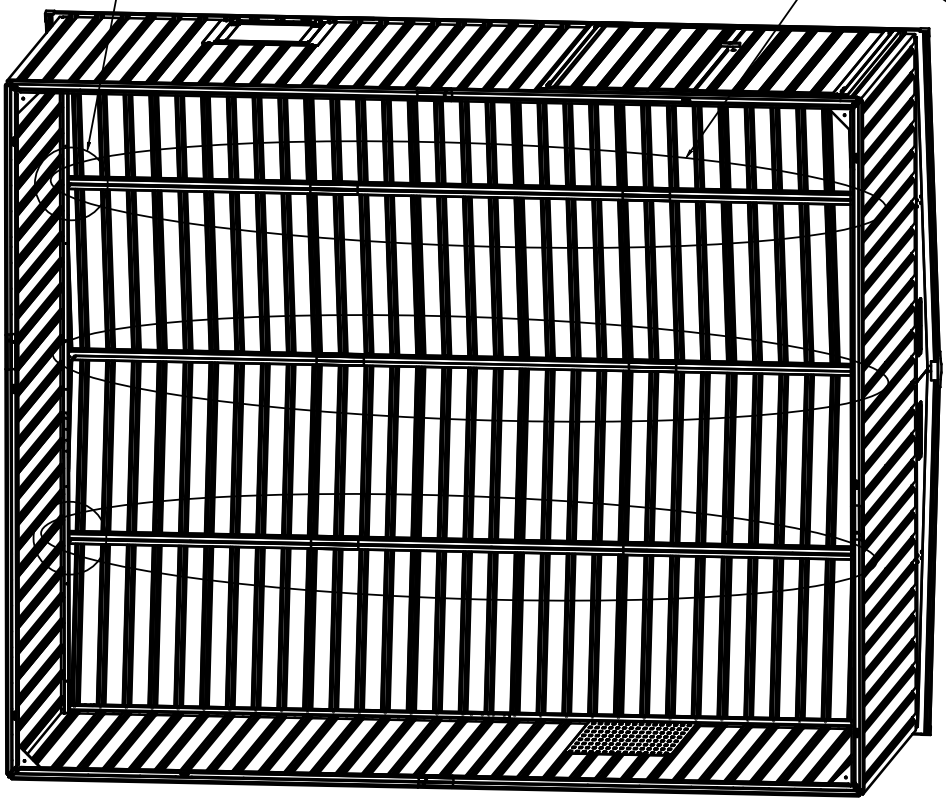

STEP 3 8

PART	NO.	QTY.
2	HG	15

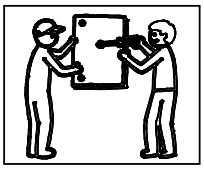

This step requires two people to complete the installation together.

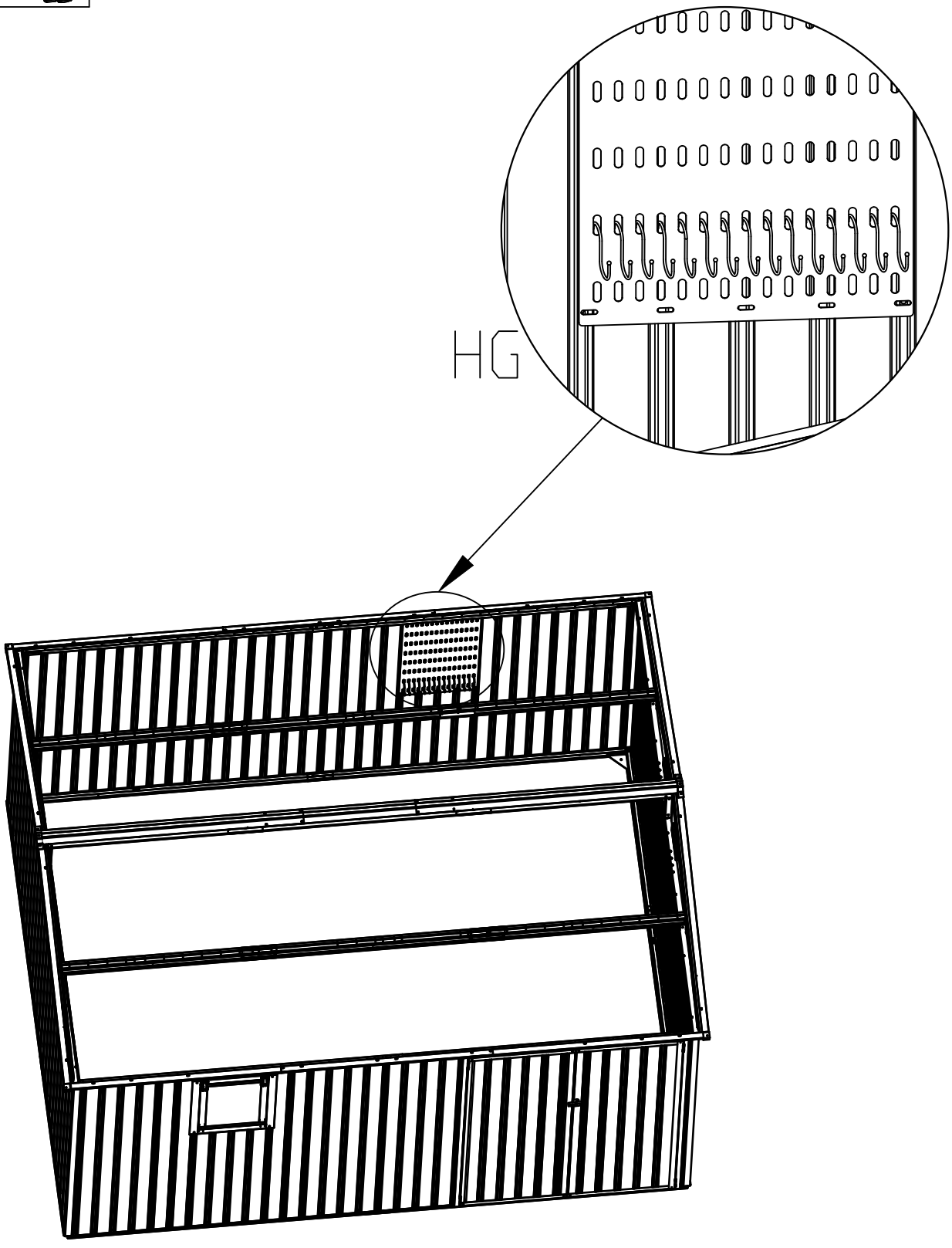

HELP CENTER

Question about your product? We're here to help. Visit us at:



Chat Support



Product Inquiry



Orders FAQ



Product Assembly



Returns & Refunds

We Stands Behind the Quality of Their Furniture

if you have any issues with your item please let us know! We will always do our best to comeu p with a solution that you will be happy with.Please get in touch with our customer service team before returning the product.And pls do not throw the original box(es) if you have not finished assembling or confirmedno qualityissues.
Length of return period:
Items can be returned within 30 days of purchase.
In the meanwhile,everything you purchased from us comes with a one-year warranty.
Who is responsible for the return shipping fee:
We will cover the return shipping fees if:
1.Your item has a manufacturing defect in its materials or workmanship.For example, tornwicker or misaligned screw holes.We will se nd you a prepaid shipping label after photosare sent.
2.Your item has been damaged in transit.For example, glass is broken or wicker is damaged We will send you a prepaid shipping lab el after photos are sent.
3.You receive the wrong box(es) due to a warehouse error. We will send you a prepaidshipping label after photos are sent of the wr ong SKU numbers on the outer box(es).4.One or more boxes are lost in transit. We will send vou a prepaid hipping label if you no lon ger want the item.
*However, we still hope to work with you for a better solution instead of a return. Please don't hesitate to contact our customer service team.
Customer will cover the return shipping fees if:
1 .You don't like the product(s) after receiving the box(es).
2.You no longer need the product(s) but you have received the box(es).
3.You buy the product(s) by mistake but you have received the box(es).
4.Order/Shipment cancellation failed and you have received the box(es).

Return Request

in order to get a full refund as described in this return policy, all items must be: (1) In a brand new/unused condition, please provide photos before and after packaging.(2) When returning, all accessories and parts are firmly packed in all original packaging.
if your return does not meet the requirements, you may not get a full refund.
When will I be refunded?
The refund is released once the goods have been returned to our warehouse.
What if the product is damaged/defective outside of the valid return period?
We want you to be a happy customer. Please reach out to us by email and we will come upw ith a solution to make sure you are satisfied.

Reach us at

support@garvee.com

Limited Liability & Warning

No Unauthorized Modifications/Repairs: Do not modify or attempt to repair this product unless you are an authorized technician. Unauthorized actions may create hazards and void all warranties

Misuse & Non-Compliance: We are not liable for any injury, damage, or loss resulting from:

(a) misuse, abuse, neglect, or improper installation;

(b) failure to follow instructions or safety precautions;

(c) use of unauthorized parts/accessories;

(d) unauthorized modifications/repairs;

(e) accidents, natural disasters, or external causes.

If you doubt any step of installation or operation, stop using the product and contact authorized service or the customer support.

LIMITACIÓN DE RESPONSABILIDAD Y ADVERTENCIA

Modificaciones o Reparaciones No Autorizadas: NO modifique ni intente reparar este producto a menos que sea un técnico autorizado. Las acciones no autorizadas pueden generar riesgos y anularán todas las garantías.

Uso Indebido e Incumplimiento: No asumimos responsabilidad alguna por lesiones, daños o pérdidas que resulten de:

(a) uso indebido, abuso, negligencia o instalación incorrecta;

(b) incumplimiento de las instrucciones o precauciones de seguridad;

(c) uso de piezas o accesorios no autorizados;

(d) modificaciones o reparaciones no autorizadas;

(e) accidentes, desastres naturales o causas externas.

Si tiene dudas sobre algún paso de la instalación o el funcionamiento, deje de usar el producto y póngase en contacto con el servicio técnico autorizado o con atención al cliente.

GARVEE

support@garvee.com