## Tree sections

# Assembly Guide

### Note:

Pre-lit trees include electrical components and require proper installation to light up.

1. Remove all accessories from your packaging box and count the number of sections of the tree trunk.
2. Identify the assembly diagram below that matches your section count (e.g., for a 3-section tree, use the A+B+C layout).
   Note: 1, Ensure all tree sections are arranged in the correct alphabetical order.
   2, Remove the circular protector caps from the end of each pole before assembling.
3. Assemble from the bottom up, fully shaping and fluffing each section before attaching the next.
4. Attach the next sections and connect the wire connectors

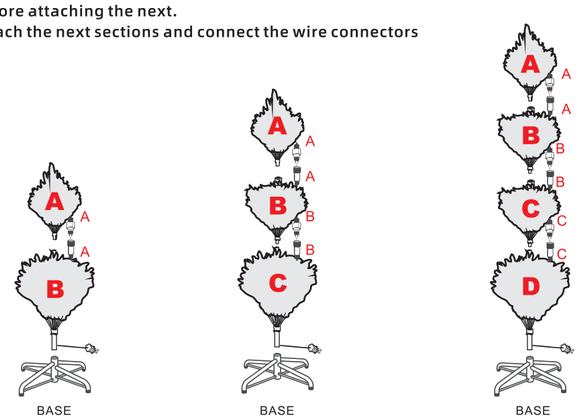


**1.Please select the appropriate assembly diagram from the options above, which corresponds to the number of sections you counted from your packaging.**

**2.Each tree comes with a top section, a bottom section, and a stand (either metal or wood). Larger tree models will also have one or more middle sections for added height and fullness.**

**RECOMMENDED ASSEMBLY REQUIREMENTS for best results**

LADDER (REQUIRED) | 2 PERSON ASSEMBLY | UP TO 120 MIN ASSEMBLY

## Dear Customer:

**Thank you for your reference!**

**Wish you a happier family and a happier life with our Christmas tree!**

# Artificial Christmas Tree INSTRUCTION MANUAL

## 3 With LED LIGHTS

**Dear Customer:**

Thanks for choosing our trees!Please take care of your new tree!First,there are a few tips that you should follow to keep your tree long-lasting and more beautiful!

## Notice

### SAFETY INSTRUCTIONS

### General Safety

- Tighten all screws securely before use.
- Do not place or store the tree in damp locations, near open flames, or other intense heat sources.
- This is a seasonal product and is not intended for permanent installation or use.
- Stop using immediately if any parts are missing, broken, damaged, or worn, until repairs are made or factory replacement parts are installed.
- Follow the manufacturer's instructions strictly; improper use will void the product warranty.

### Additional Safety for LED Pre-lit Trees:

- Do not secure wires with staples or nails, nor place them on sharp hooks or nails.
- Always unplug the tree when leaving home, going to bed, or leaving it unattended.
- Do not allow lamps to rest on the power cord or any wires.
- Do not hang ornaments or other objects from cords, wires, or light strings.
- Do not close doors or windows on the product or extension cords, as this may damage the wiring.
- Never operate the product if the power cord or plug is damaged.
- Do not use this product for purposes other than its intended use.

1. 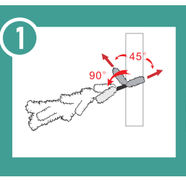

Make the innermost tips to be 90° to the branch and between-tips 45°

2. 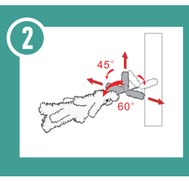

Make the next layer tips to be 60° to the branch and between-tips 45°

## Light String Connection

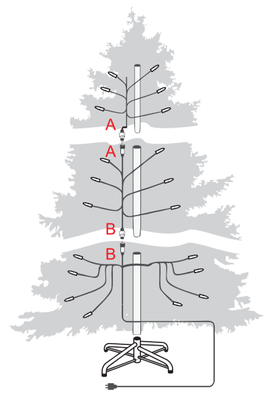


**Figure 1**

**Basic Connection (Refer to Figure 1)**

**Each tree section is equipped with a light string cord, and the connectors on these cords are marked with letter labels (e.g., A, B, .....). Match and connect the connectors that have the corresponding letters. All labeled connectors must be properly connected for the entire tree's lights to turn on.**

3. 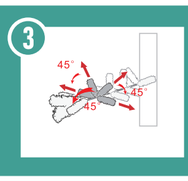

Make the next layer tips to be 45° to the branch and between-tips 45°

4. 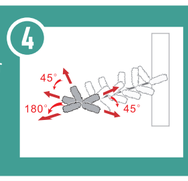

Make the outermost tips to be 5 direction as picture,the top one to be 180° to the branch.

## SUPPORT

Question about your product? We're here to help. Visit us at:

http://www.limeigroup.com

customer-service@limeigroup.com

### PRODUCT WARRANTY INFORMATION

All items can be returned for any reason within 30 days of the receipt and will receive a full refund as long as the item is returned in its original product packaging and all accessories from its original shipment are included.

All returns must be shipped back to our storehouse at the customer's expense. Please email to us.

Boxes for return shipping will not be provided by us, and is the customer's responsibility to either use the original shipping boxes or purchase new boxes.

Pictures may be required for some returns to ensure an item is not damaged before its return.

## ⚠ WARNING

**Manufacturer and seller expressly disclaim any and all liability for personal injury, property damage orloss, whether direct, indirect,or incidental, resulting from the incorrect attachment,improper use,inadequate maintenance, or neglect of this product.**