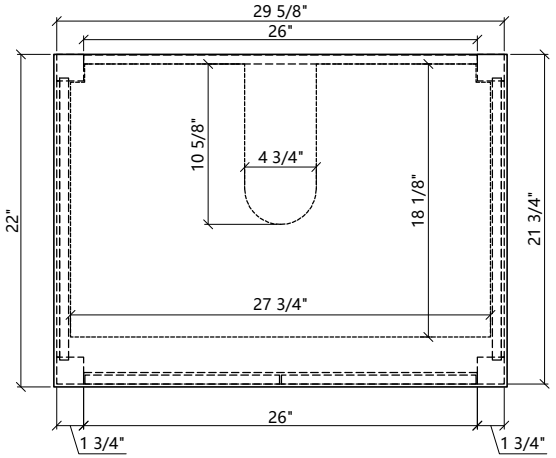
29 5/8"
26"
10 5/8"
4 3/4"
18 1/8"
22"
21 3/4"
27 3/4"
26"
1 3/4"
1 3/4"

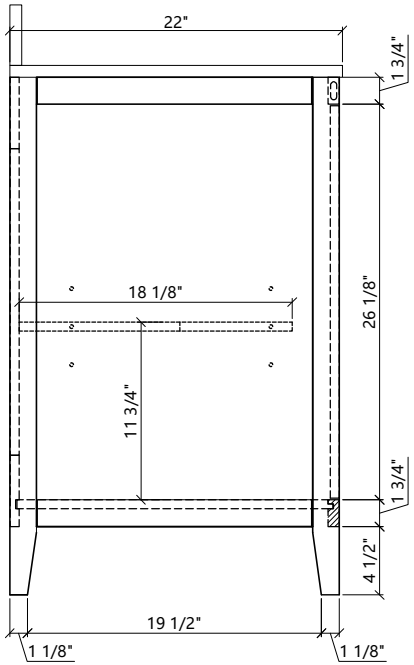
22"
1 3/4"
18 1/8"
26 1/8"
11 3/4"
1 3/4"
4 1/2"
19 1/2"
1 1/8"
1 1/8"

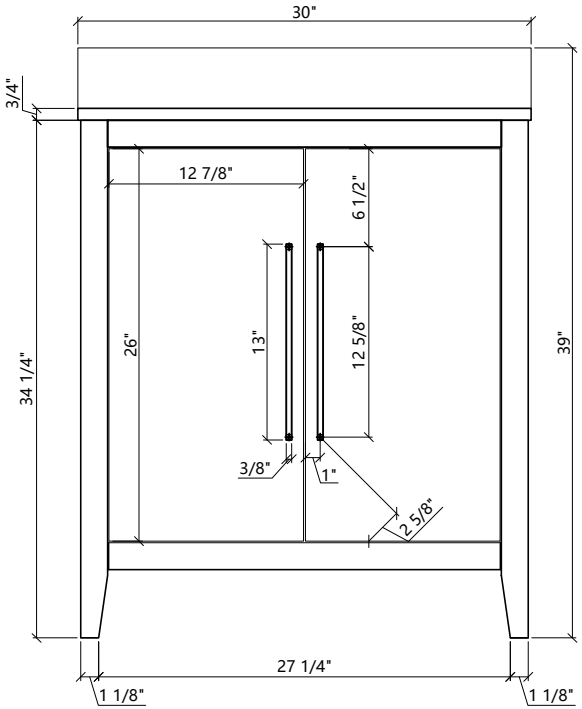
30"
3/4"
12 7/8"
6 1/2"
26"
13"
12 5/8"
39"
34 1/4"
3/8"
1"
2 5/8"
27 1/4"
1 1/8"
1 1/8"

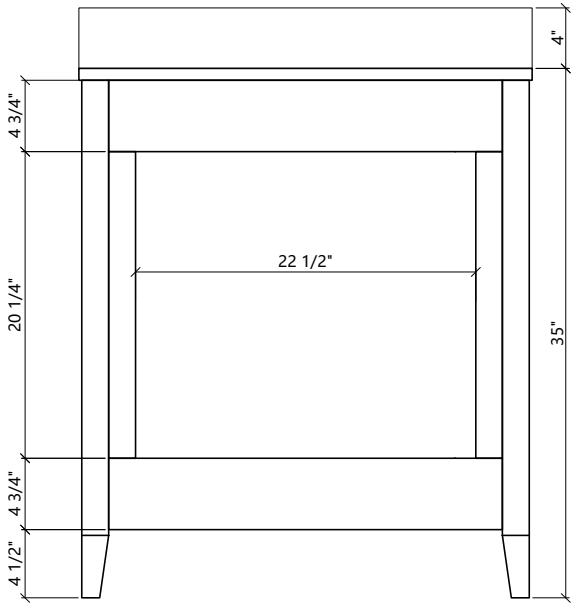
4"
4 3/4"
22 1/2"
20 1/4"
35"
4 3/4"
4 1/2"

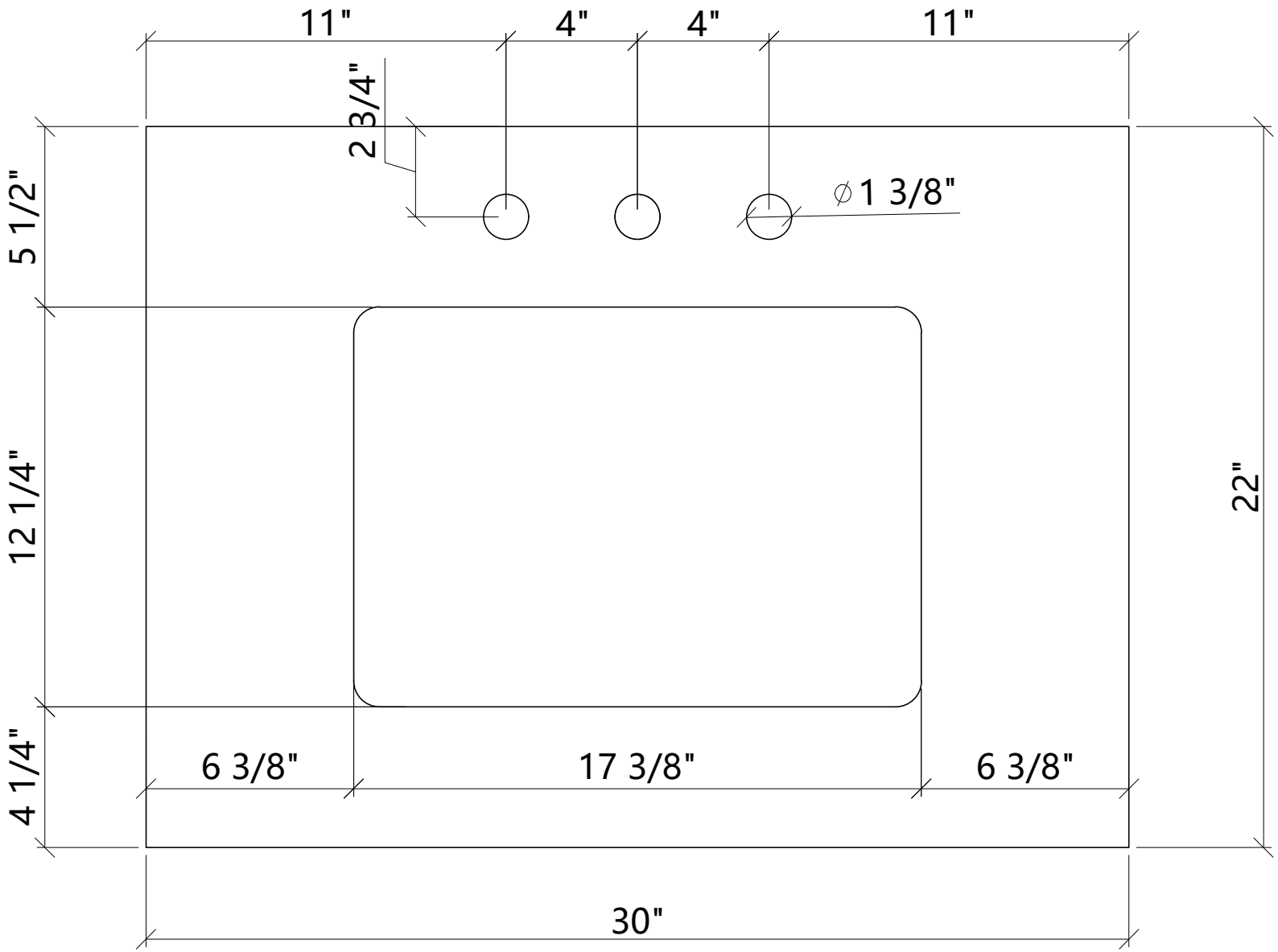
11"
4"
4"
11"
2 3/4"
∅1 3/8"
5 1/2"
12 1/4"
4 1/4"
22"
6 3/8"
17 3/8"
6 3/8"
30"

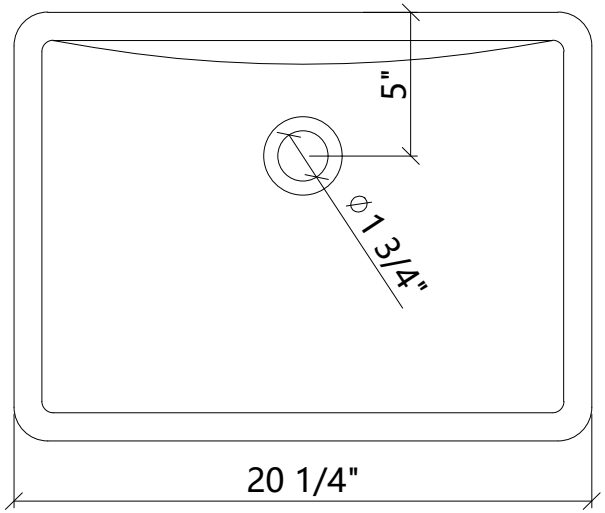
5"
ϕ 1 3/4"
20 1/4"

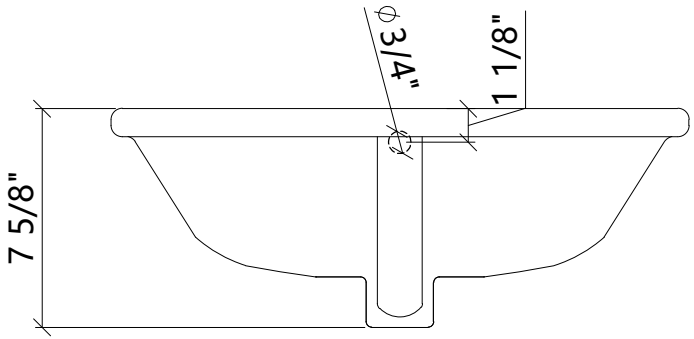
ϕ 3/4"
1 1/8"
7 5/8"

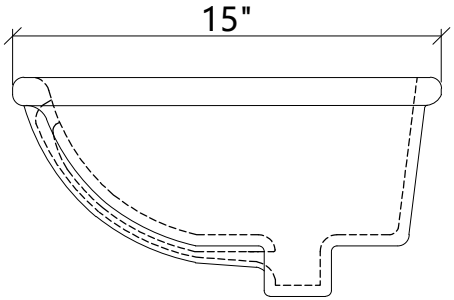
15"