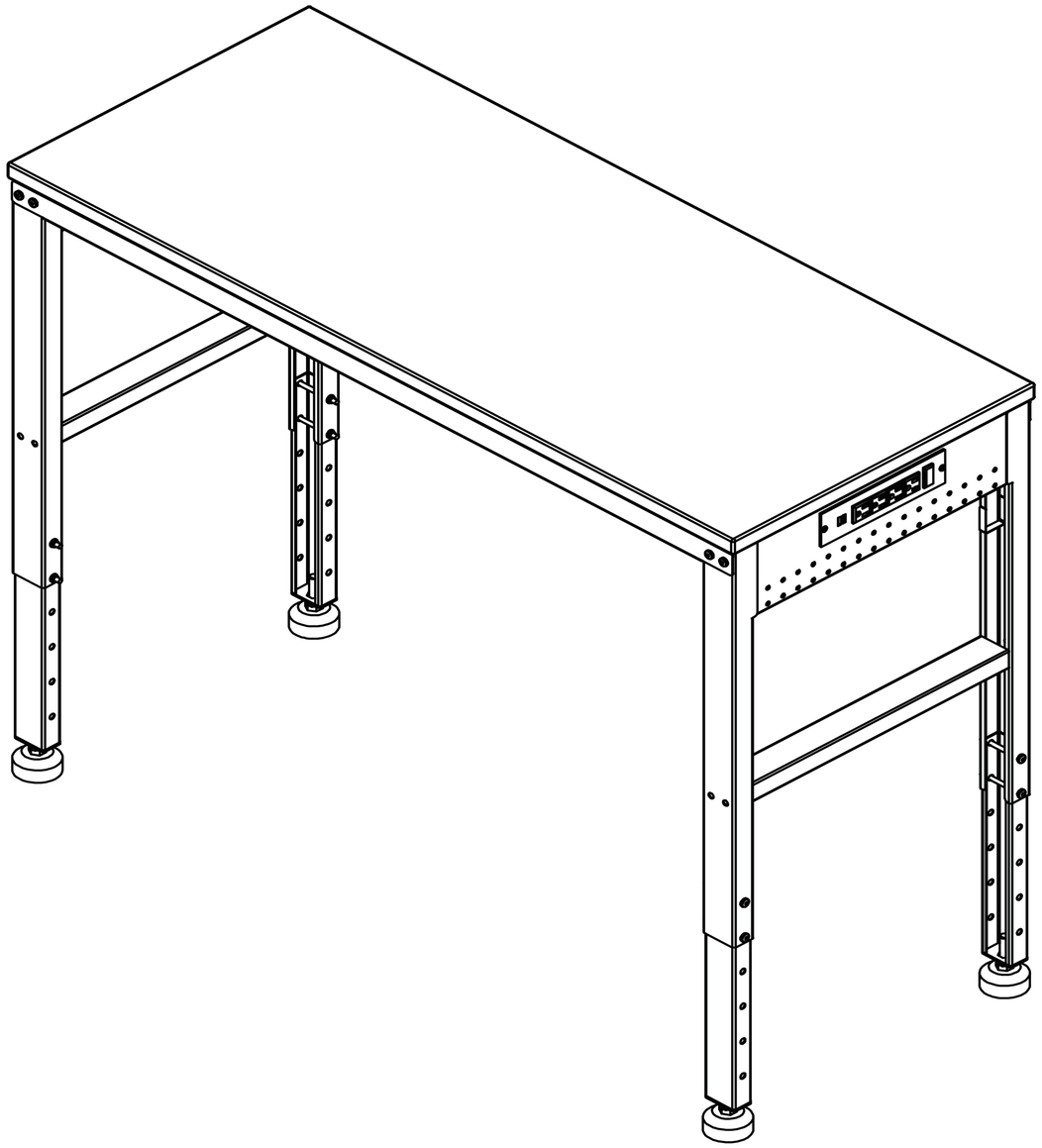

User Manual

48X20" Wood Worktop Workbench

Note

- Please read this user manual carefully.
- Please keep this manual for future reference.
- Package quantity: 1

Ⅰ. CATALOG

Ⅰ. CATALOG ---------- 1

Ⅱ. PRODUCT PRECAUTIONS ---------- 1

Ⅲ. DISCLAIMER ---------- 1

Ⅳ. INSTALLATION PREPARATION ---------- 2

Ⅴ. ACCESSORIES LIST ---------- 3

Ⅵ. INSTALLATION INSTRUCTION ---------- 4

Ⅱ. PRODUCT PRECAUTIONS

Read and follow the information in the user's manual.

Please keep kids away from small components to ensure safety.

Do not let children near the workbench.

Do not step or climb on the worktop.

Do not place overweight items.

Keep away from fire.

Please handle frame and other accessories properly.

Ⅲ.DISCLAIMER

We ask that you read this manual completely before assembling and operating your new item. We are not and cannot be held responsible for any damage or injury incurred due to improper or unsafe use of the item. We specifically disclaim responsibility for any bodily injury or property damage that may occur during any use that does not comply with applicable federal, state, or local laws or ordinances. Please keep this manual for future reference.

Ⅳ. INSTALLATION PREPARATION

1. Two or more people to move and assemble the workbench.

2. Please prepare a carpet or mat to protect your floor you need to spread out all the accessories.

3. Please prepare gloves to avoid being scratched by sharp parts that may occur during installation.

4. Please open all the boxes to check that the accessories are complete and in good condition(The accessories list on page 3).

5. the box contains some **small components**, please place them properly before installation to keep them **away from kids** and ensure safety.

6. If you need to use power tools to install this product, please **set the speed to low speed in advance**.

7. When installing please align all the holes and **do not tighten all the screws first**, otherwise, it may make the installation difficult.

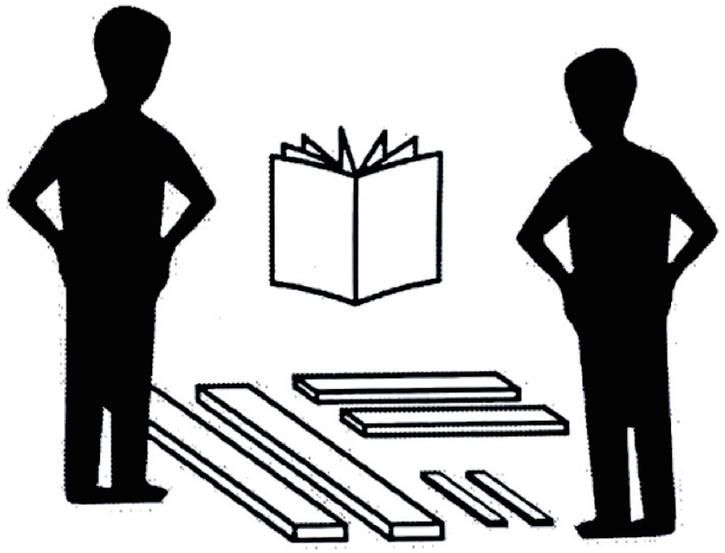

V . Accessories List

P1 x1

M5 *16mm
F1 x22

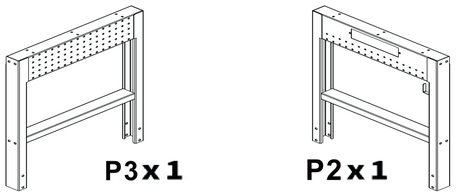

P3x1 P2x1

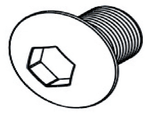

M8*12mm
F2 x8

P4 x2

M8
F3 x16

P5 x4

M8*65mm
F4 x8

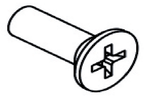

M4*12mm
F5 x2

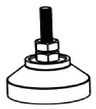

P6 x4

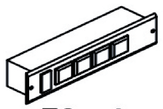

F6 x1

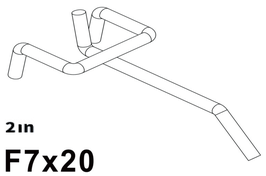

2in
F7x20

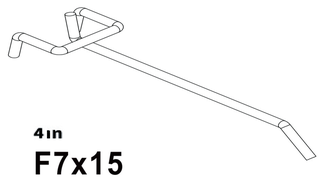

4in
F7x15

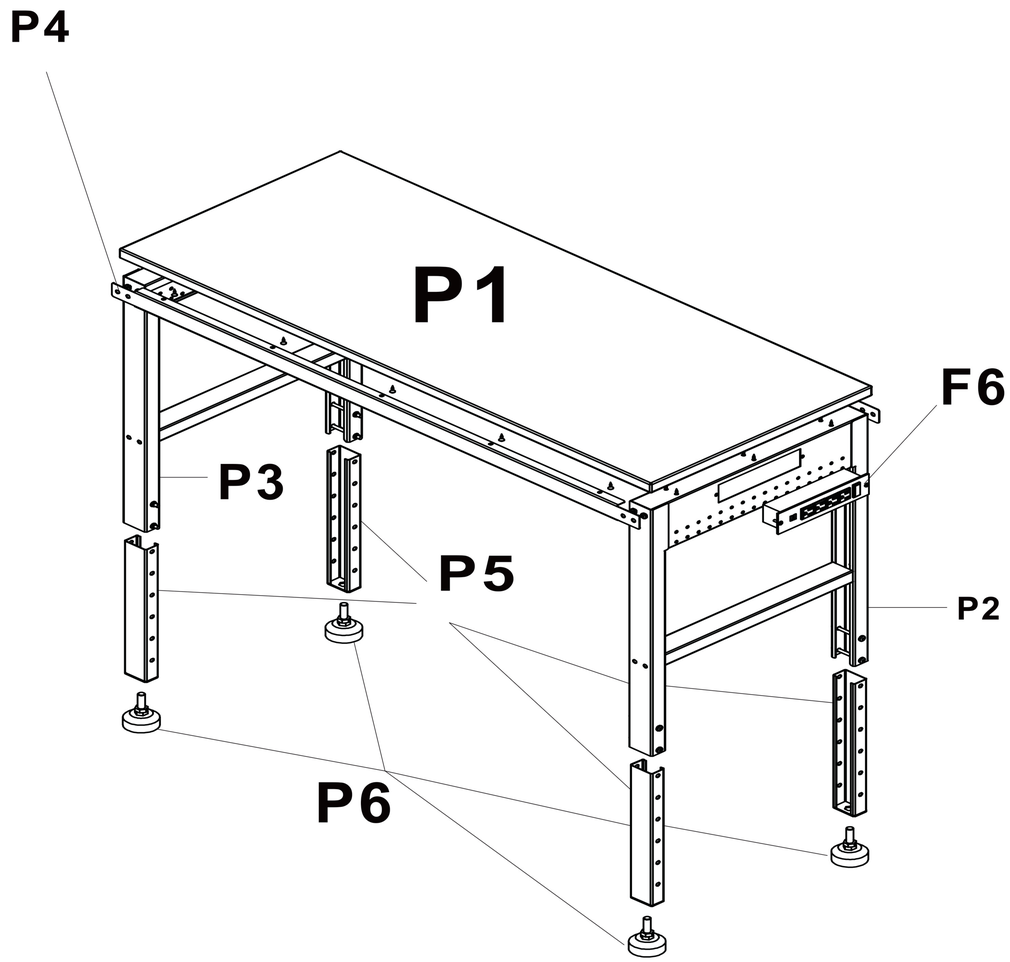

Kindly Notes:

1.Please open all boxes to check the quantity and condition of accessories.
2.When installing, please align all the holes and do not tighten all the screws first.
3.If you want to better move this table to improve efficiency,replace the footcups with casters.
4."Some screws are given extra, two or three pieces, for spare use."

Q : Is there any broken or missing part?

A : If yes, please feel free to contact us , we will do our best to assist you to solve the problem as soon as possible.

Ⅵ. INSTALLATION INSTRUCTION

Q: How to solve the hole misalignment?

A: Please do not tighten all the screws until aligning all the holes.

STEP 1

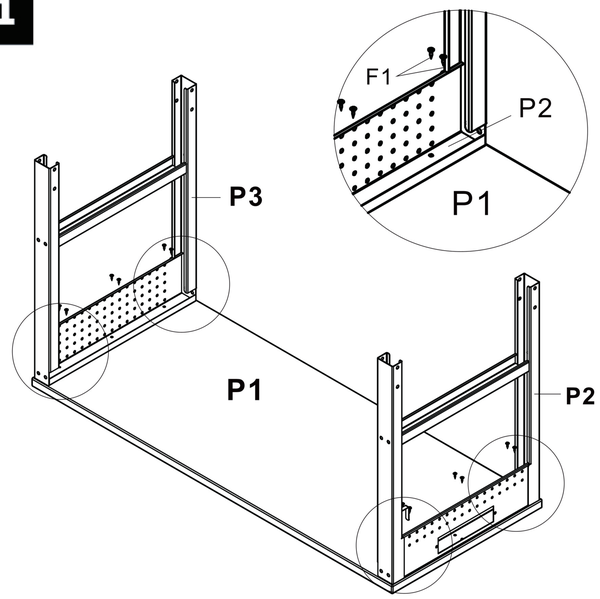

P1 x 1
P2 x 1
P3 x 1
F1 x 12

STEP 2

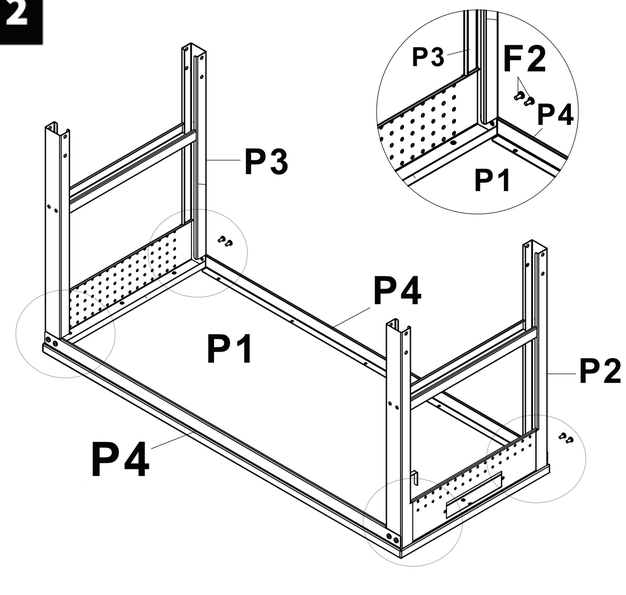

P4 x 2
F2 x 8
F3 x 8

STEP 3

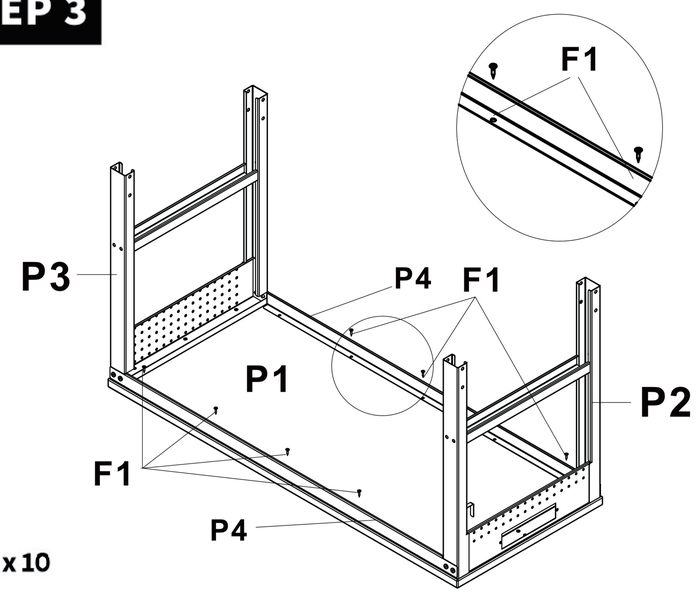

F1 x 10

STEP 4

Note: Taking off the fixing screws between P2 and P5 will not be used in the installation.

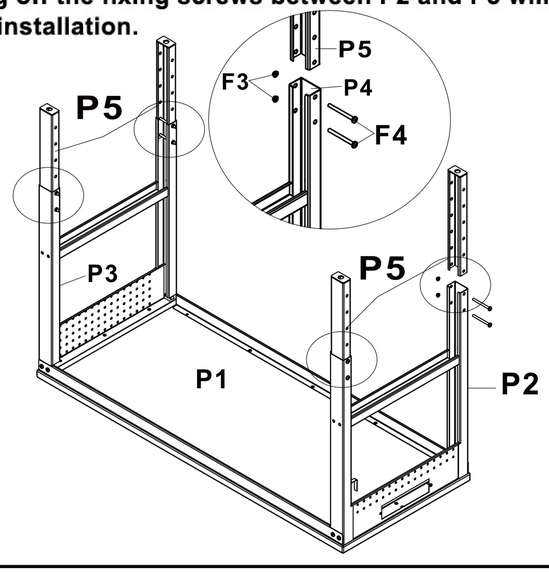

P5 x 4
F3 x 8
F4 x 8

STEP 5

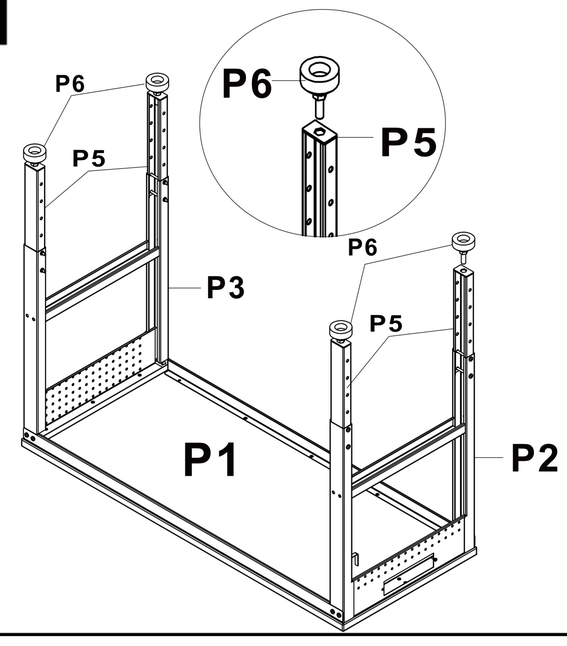

P6 x 4

STEP 6

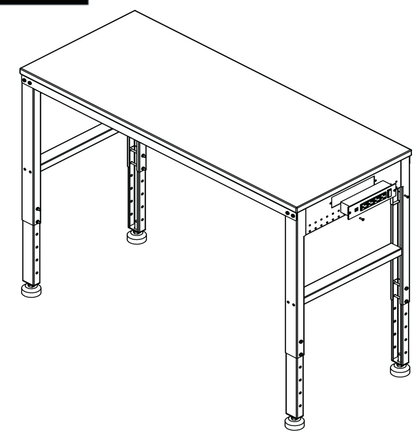

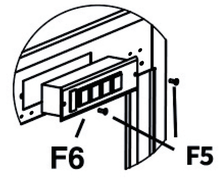

F6 x 1
F5 x 2

Finish