PRODUCT INSTRUCTION

SKU:C2303611Z
C2303615Z

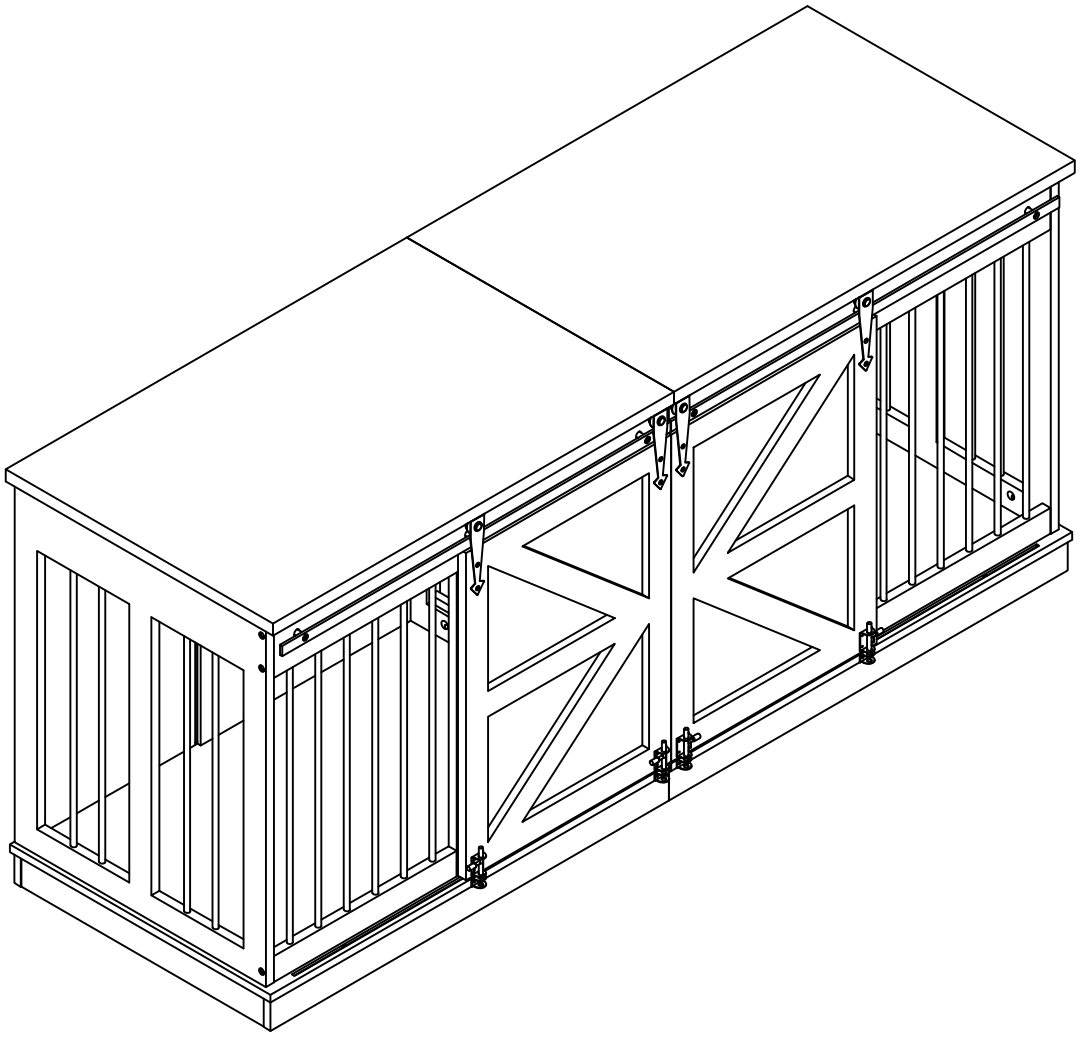

⚠ WARNING

Serious or fatal crushing injuries can oc cur from furnitu re tip- over.
To help prevent tip- over.

- Place heaviest items in the lowest drawers.
- Do not set TVs or other heavy objects on the top of this product.
- Never allow children to climb or hang on drawer, door, or shelves.
- Never open more than one drawer at a time.
- Use of tip-over restraints, only will reduce but does not eliminate the risk of tip-over.
- Never open more than one drawer at a time.

MAINTENANCE TIPS



Avoid liquid spraying or infiltrating on the product surface.



Never use chemical cleaning products. They will damage the finish.

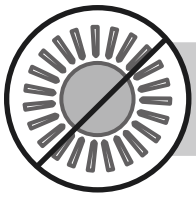

To avoid dulling of finish,do not place furiture in direct sunlight .

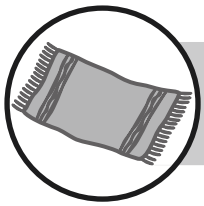

Do not put plastic or rubber rings under appliances. Use cloth of felt protectors.



To clean, use a soft or slightly damp cloth, and wipe with a clean and dry cloth.

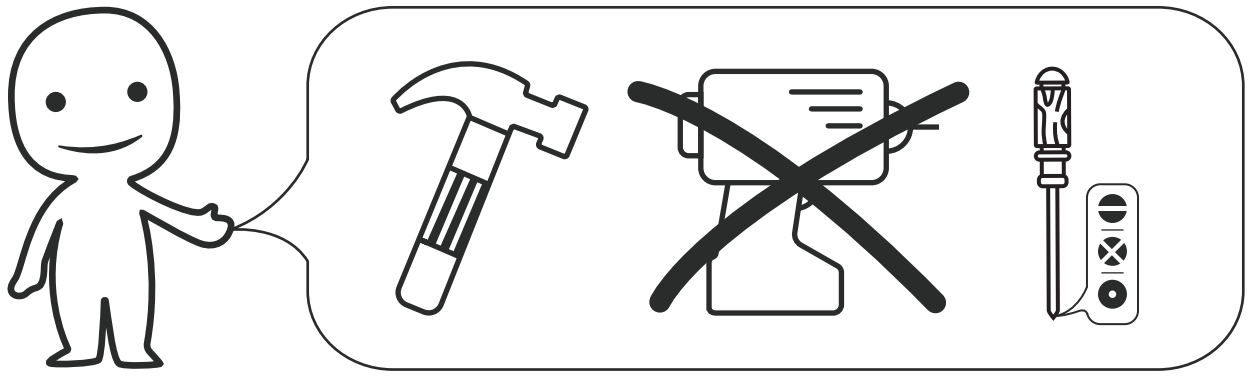



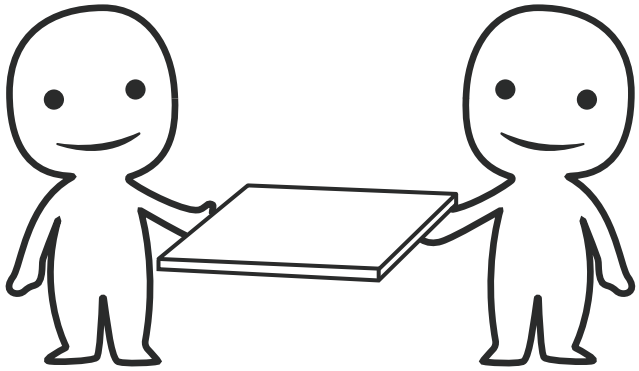

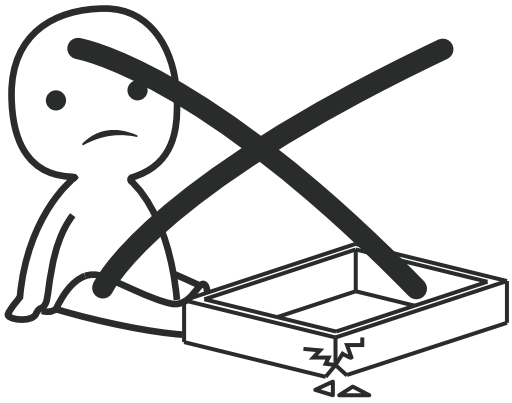

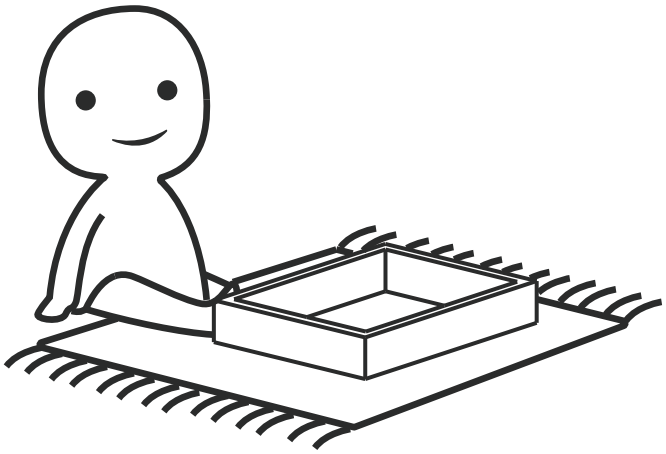



DE

Wichtige Information
- Sorgfältig und aufmerksam lesen
- Diese Information aufbewahren

GB

Safety information
- Important information
- Please read closely and carefully
- Save this information

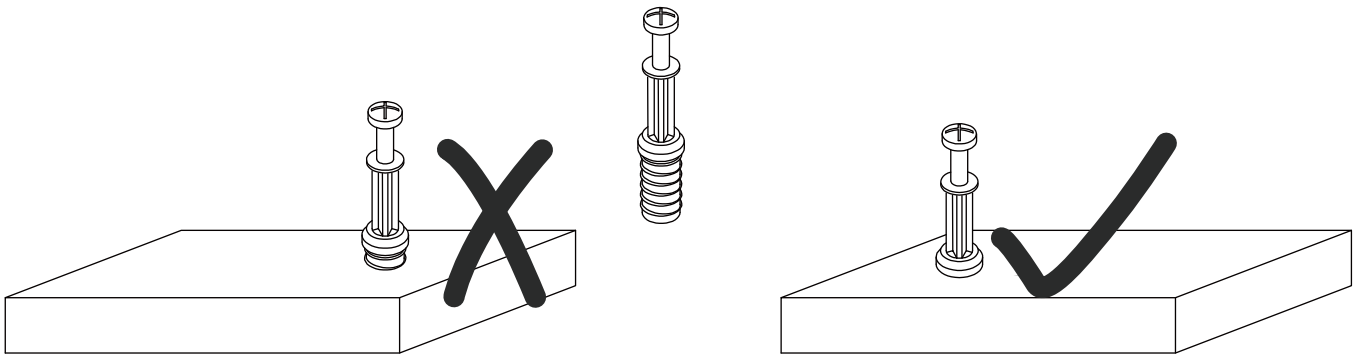

CAM LOCK

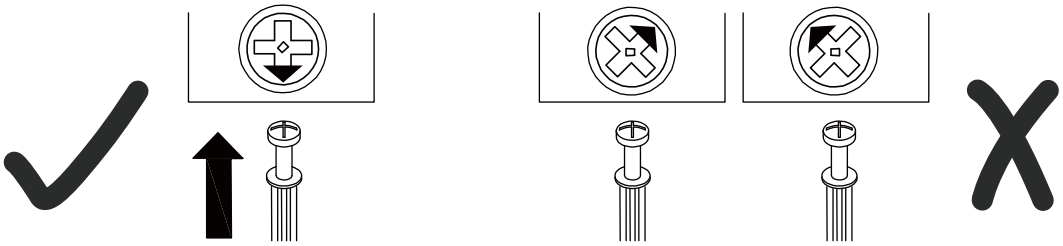

Nut should be in the centre d of the cam lock when the two panels are joined.
Cam lock should be inserted before nut.

Wenn die beiden Platten verbunden sind, sollte die Mutter in der Mitte des Nockenschlosses sein.

Die Nockenverriegelung sollte vor der Mutter eingeführt werden.

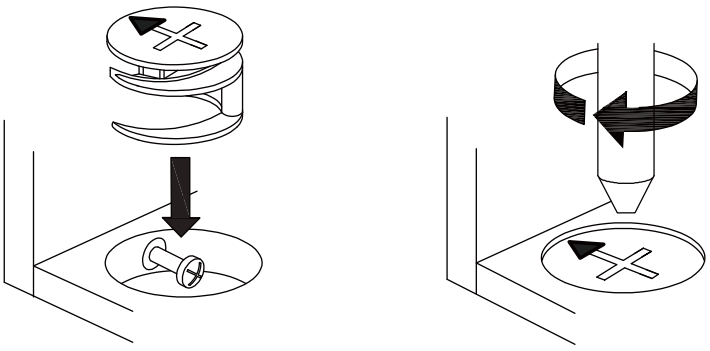

Parts List/Teileliste

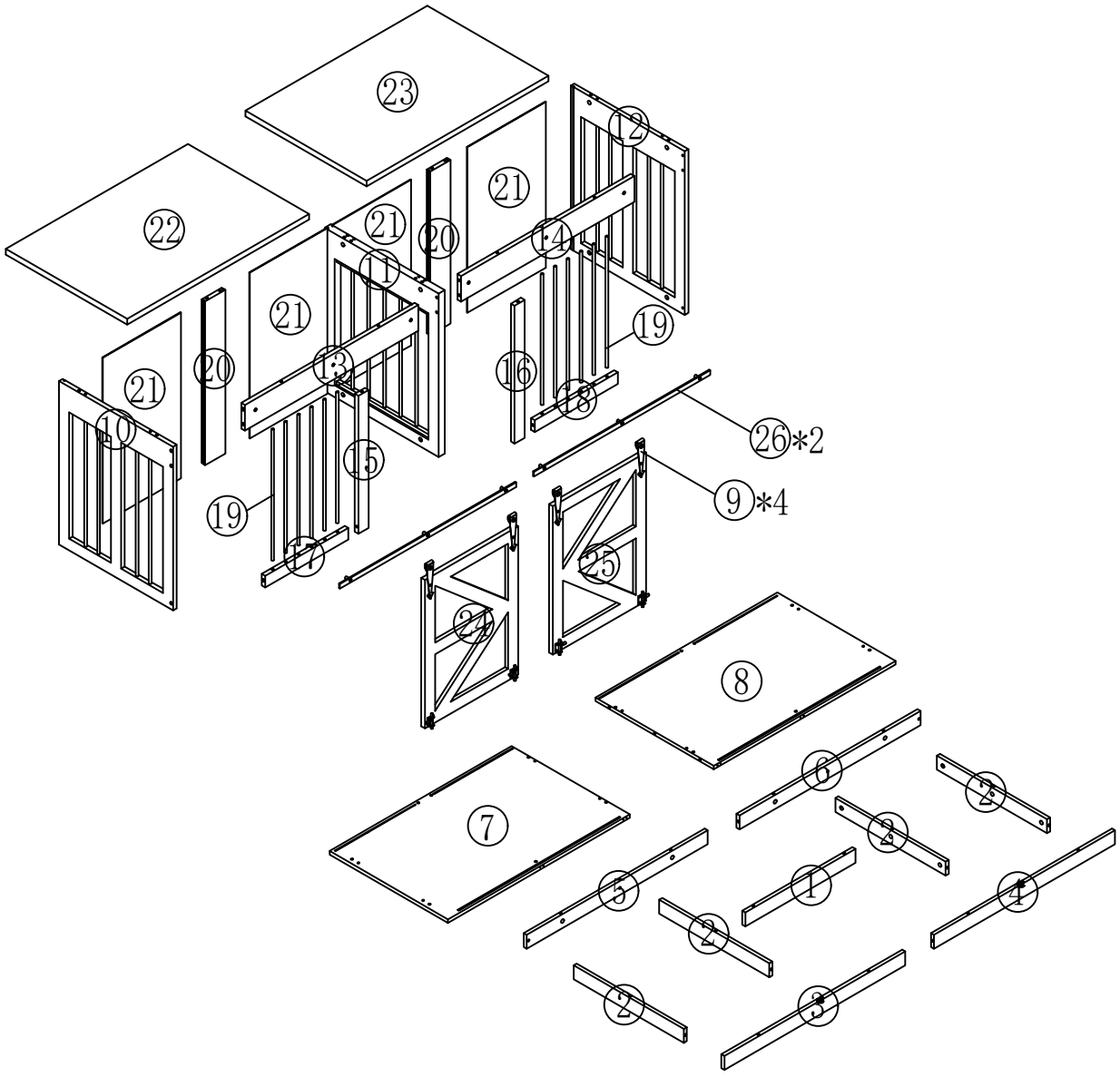

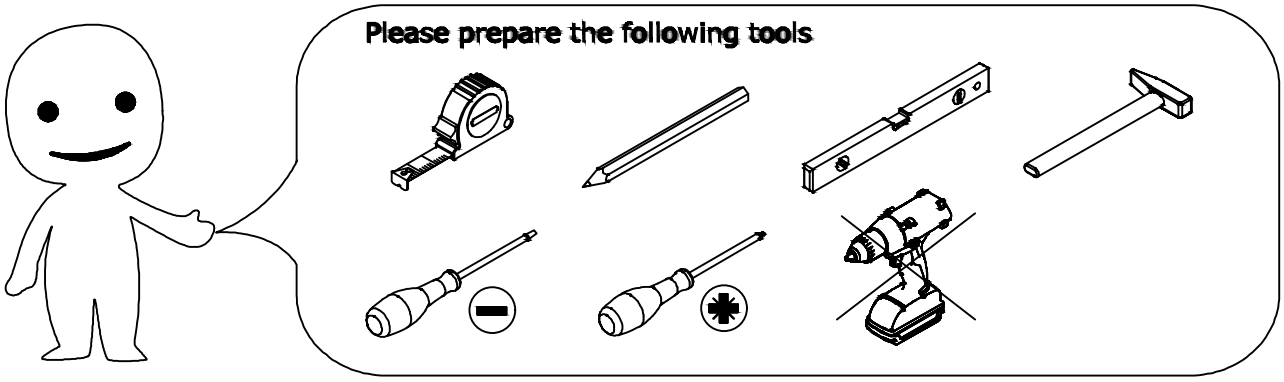

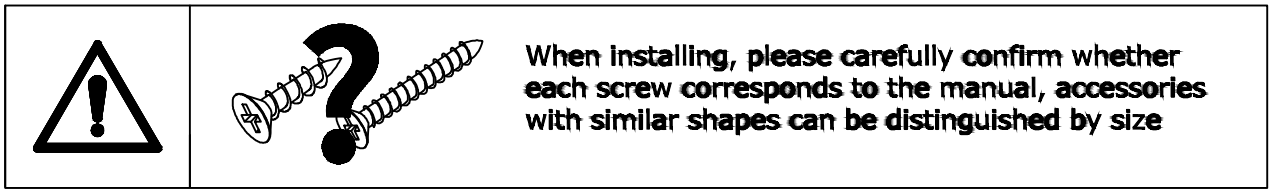

A 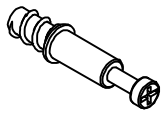 ϕ5*35mm ×60	B  ϕ15*11mm ×60	C 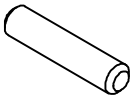 ϕ8*30mm ×25
D 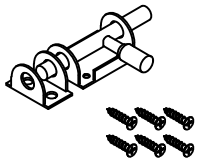 3.5*10mm ×4	E 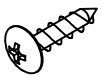 4*12mm ×8	F  M6*30mm ×12
G 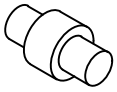 ×4	H  ×60	

1





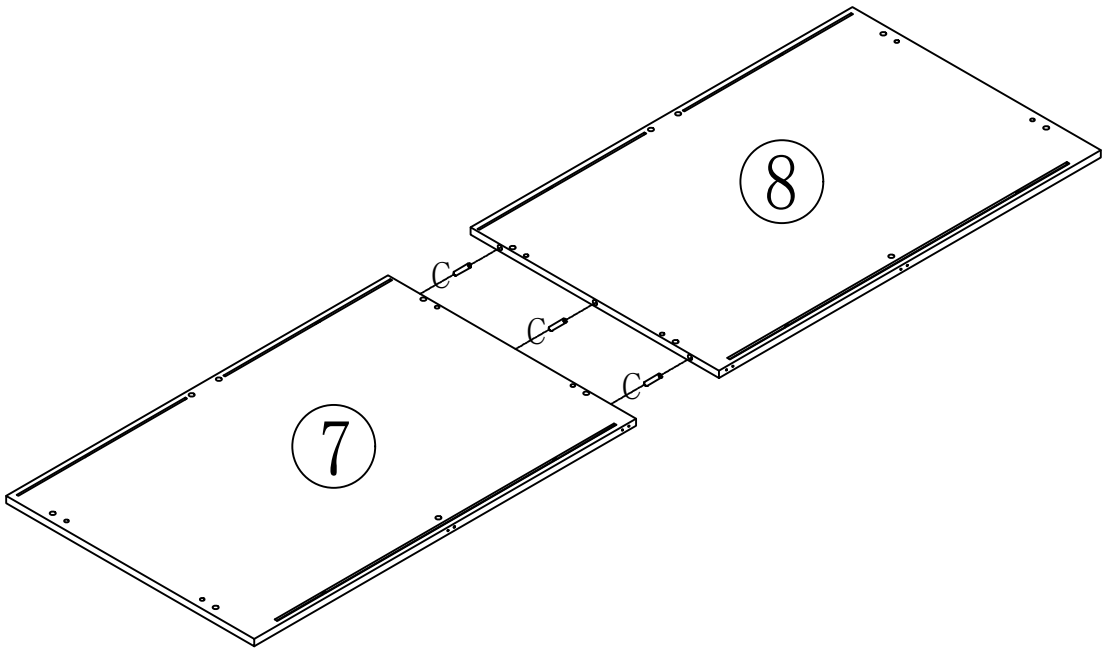

2

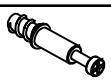



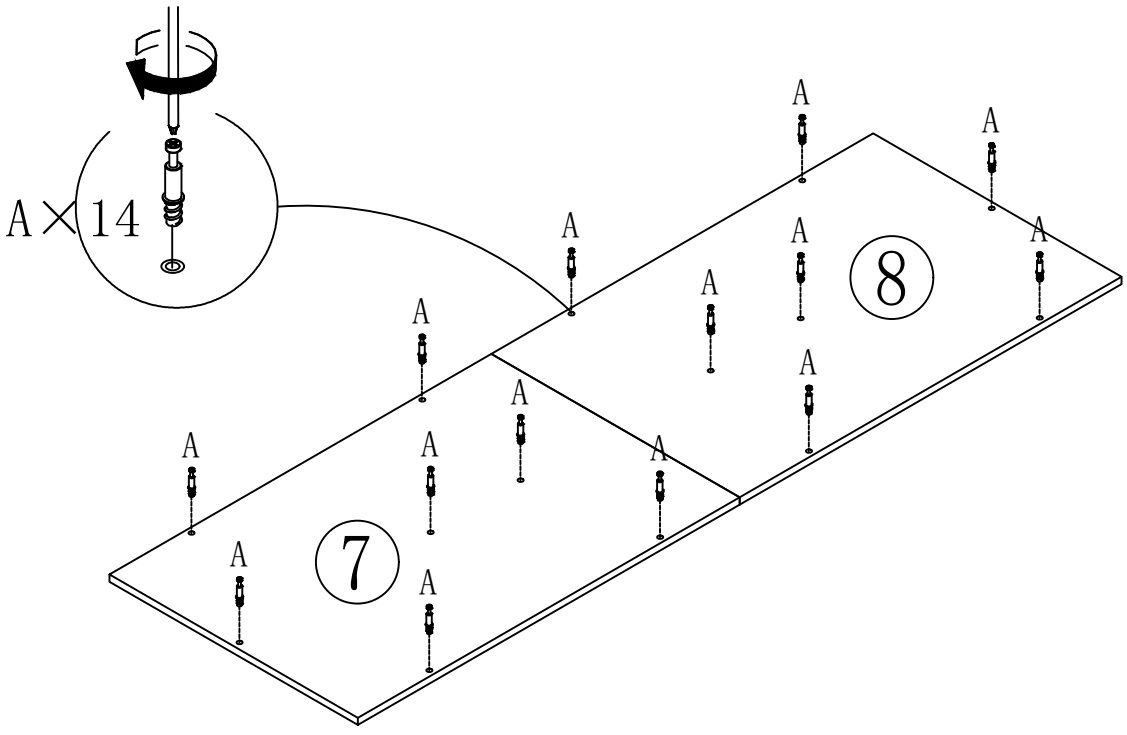

3

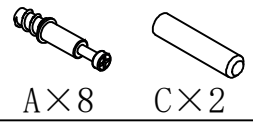

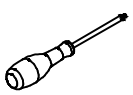

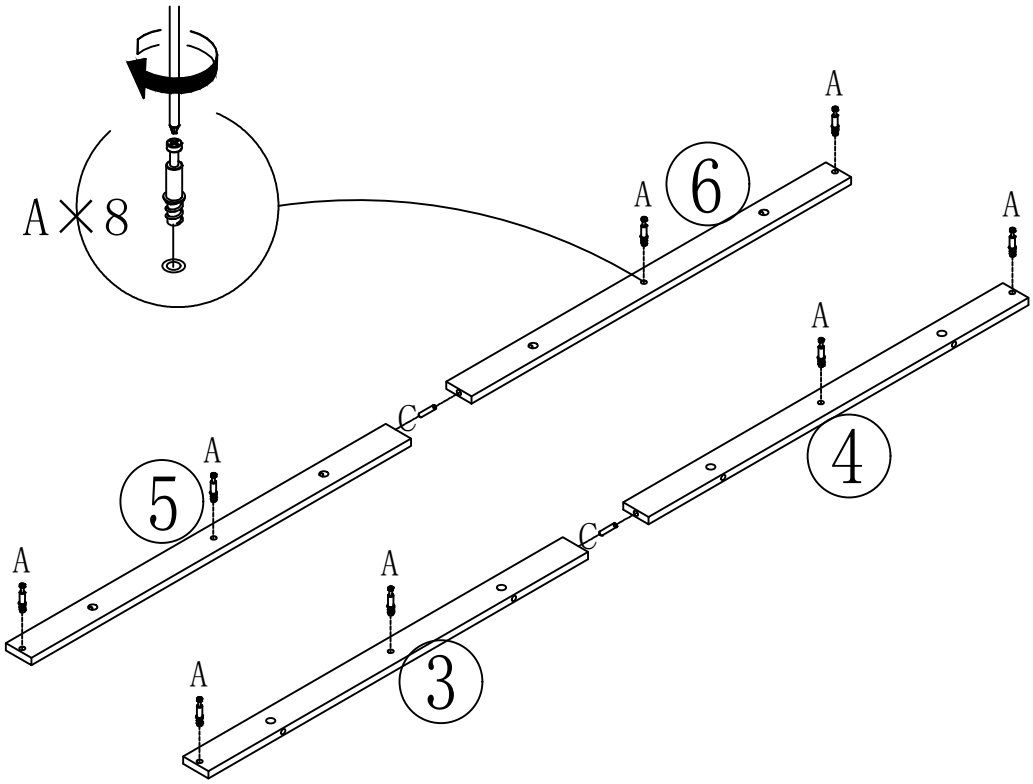

4





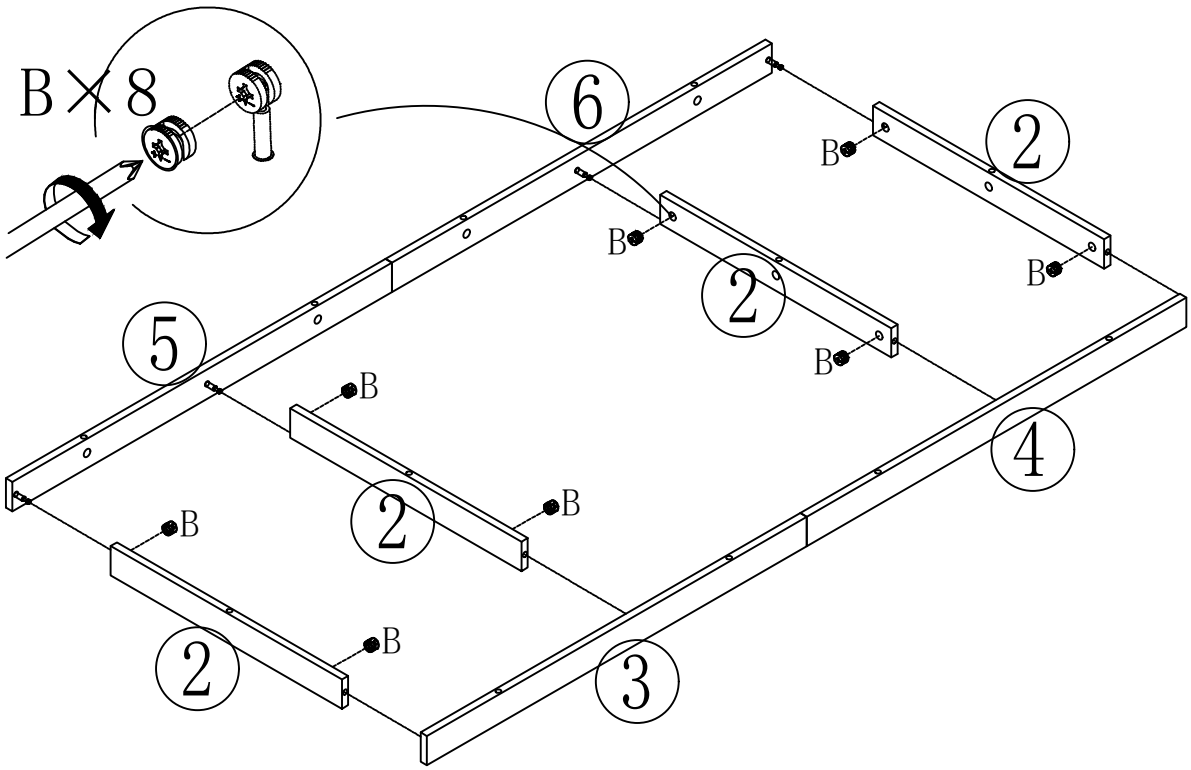

5



B×14

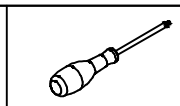

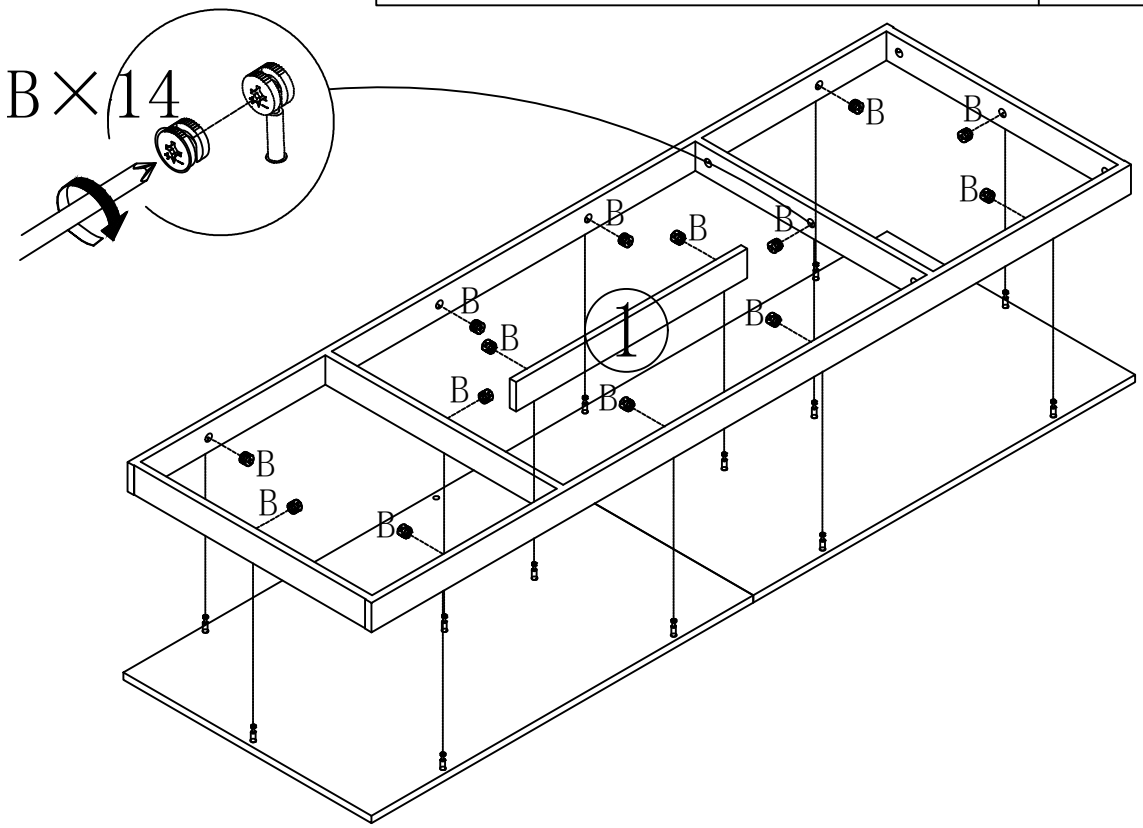

6

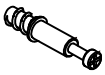

A×4

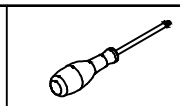

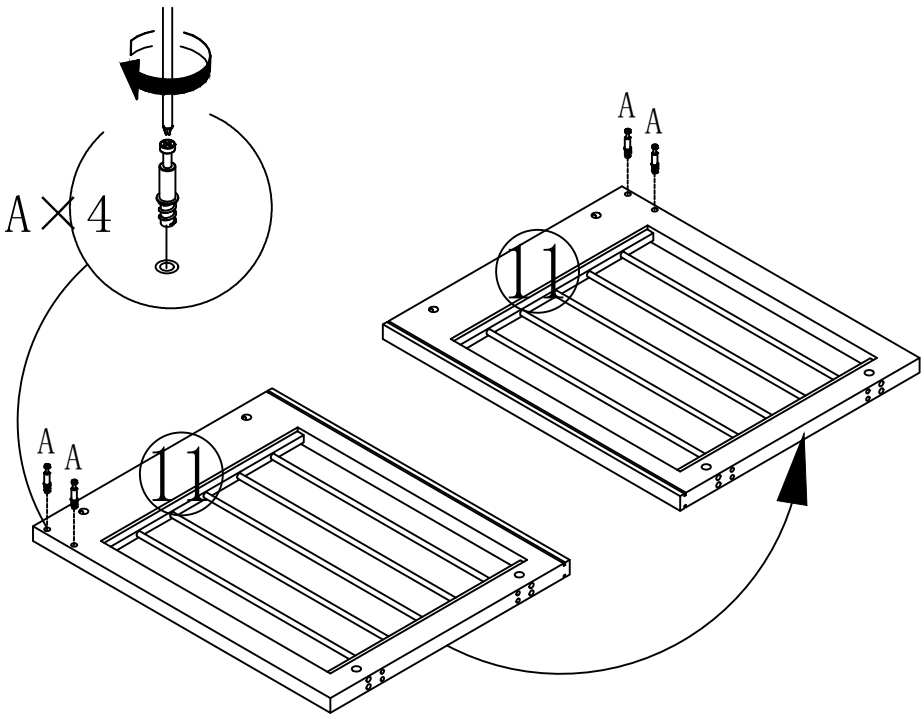

7

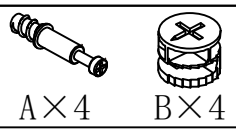



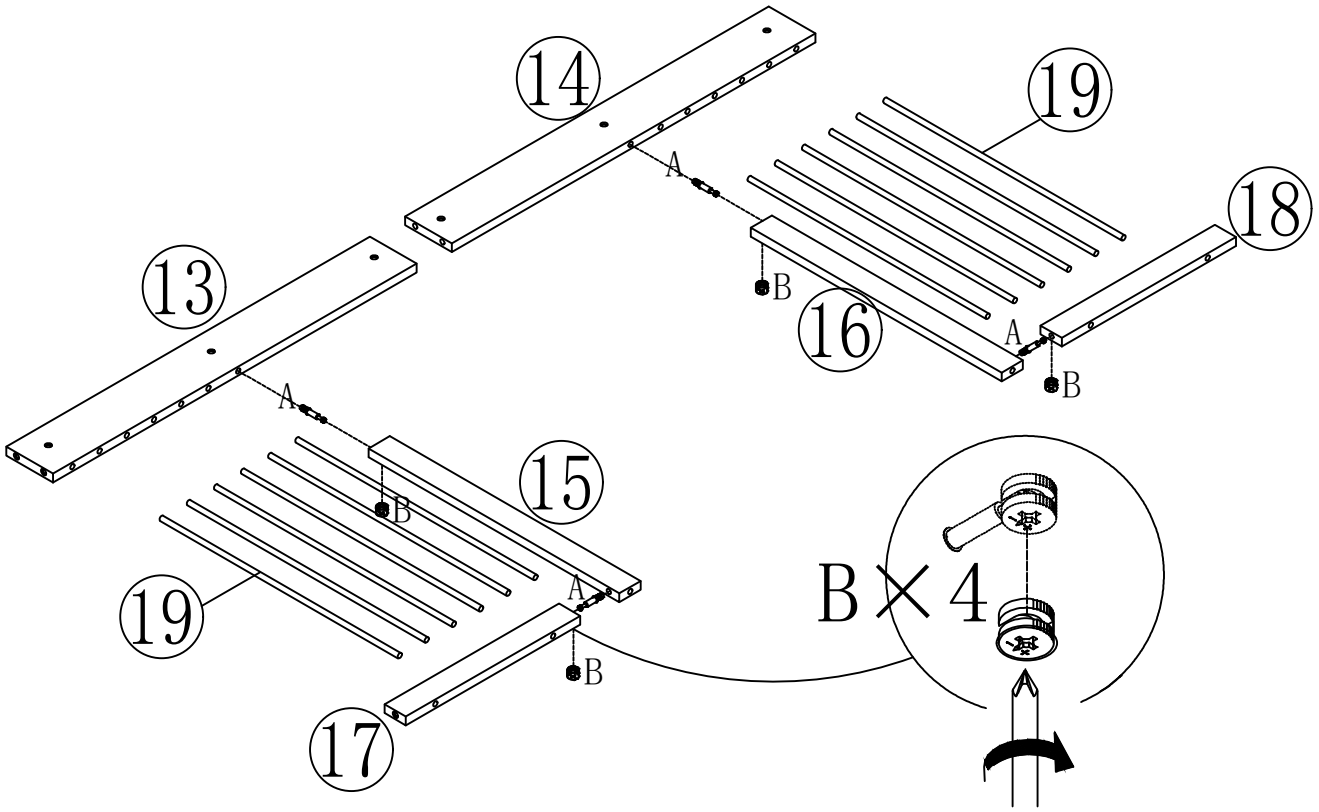

8





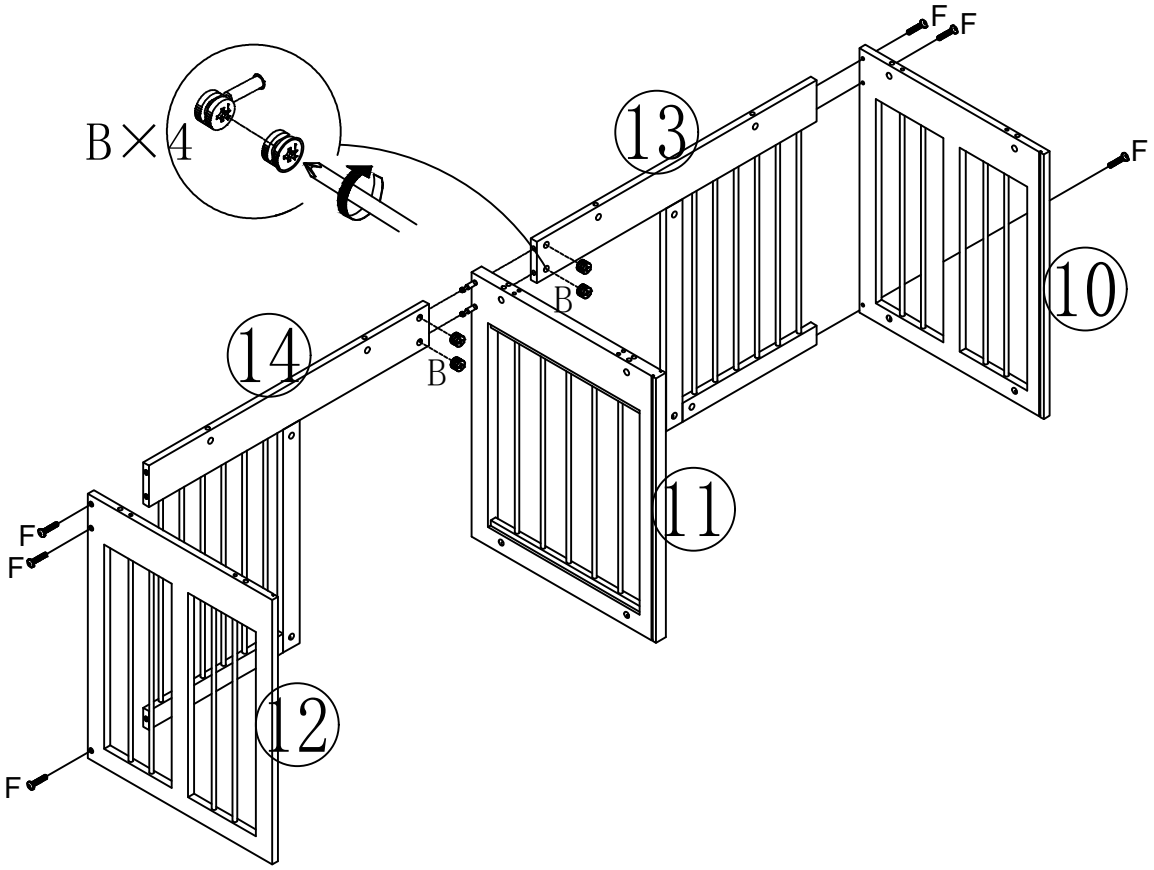

9





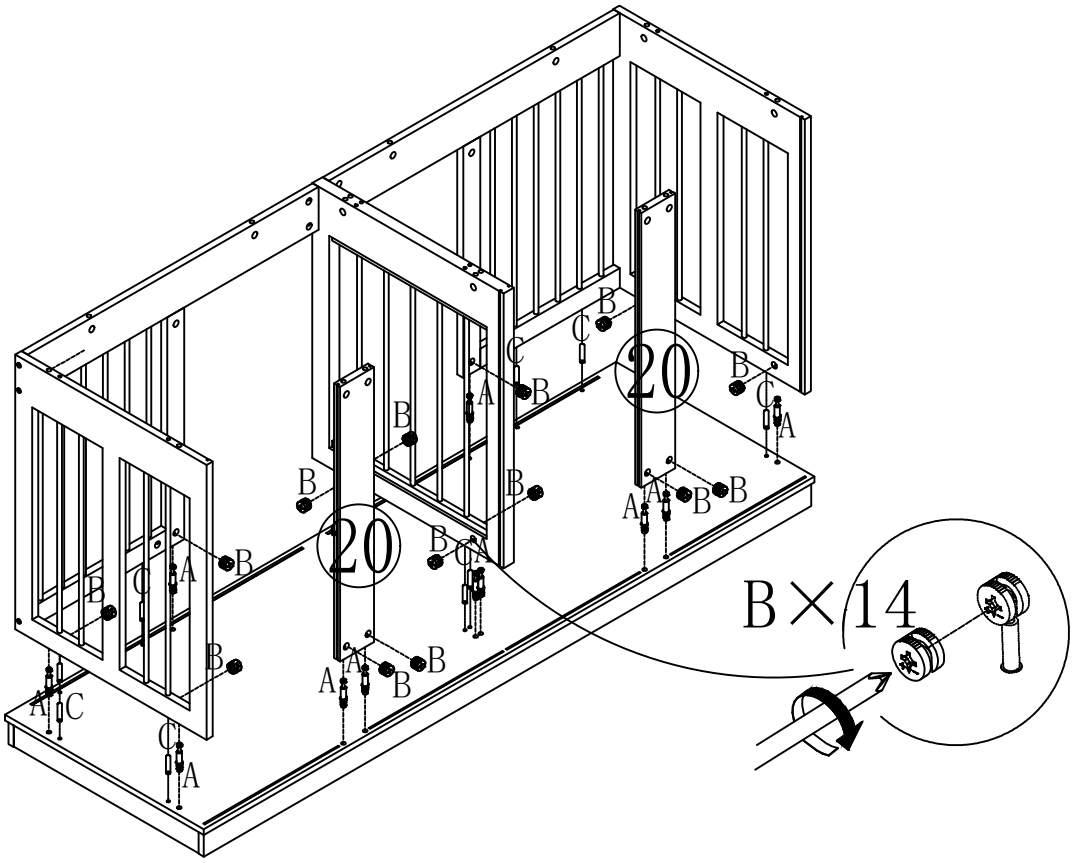

10



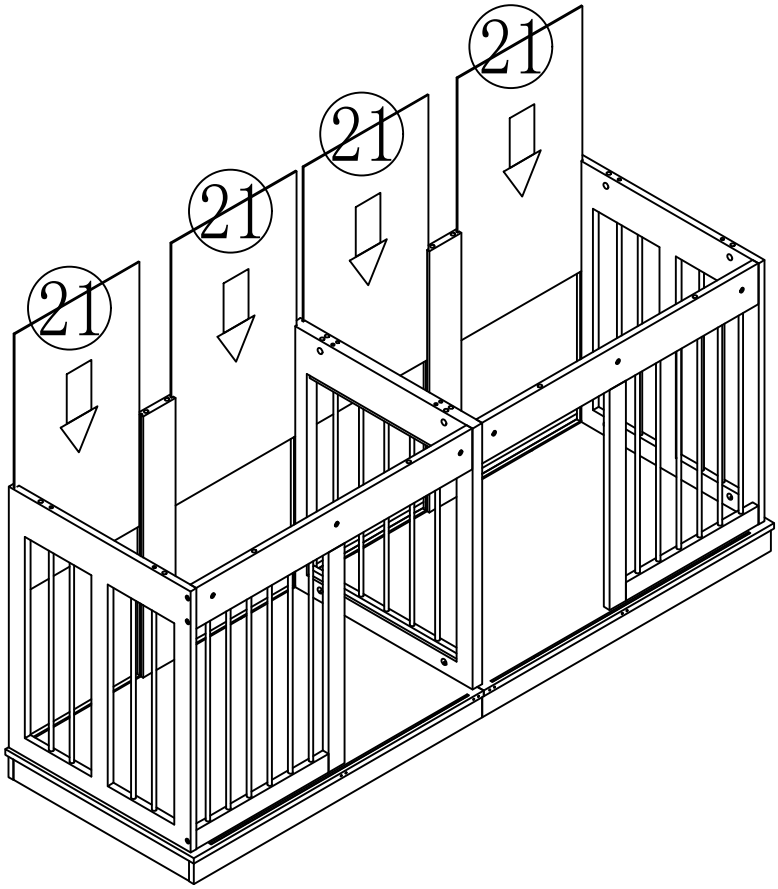

11

A×16

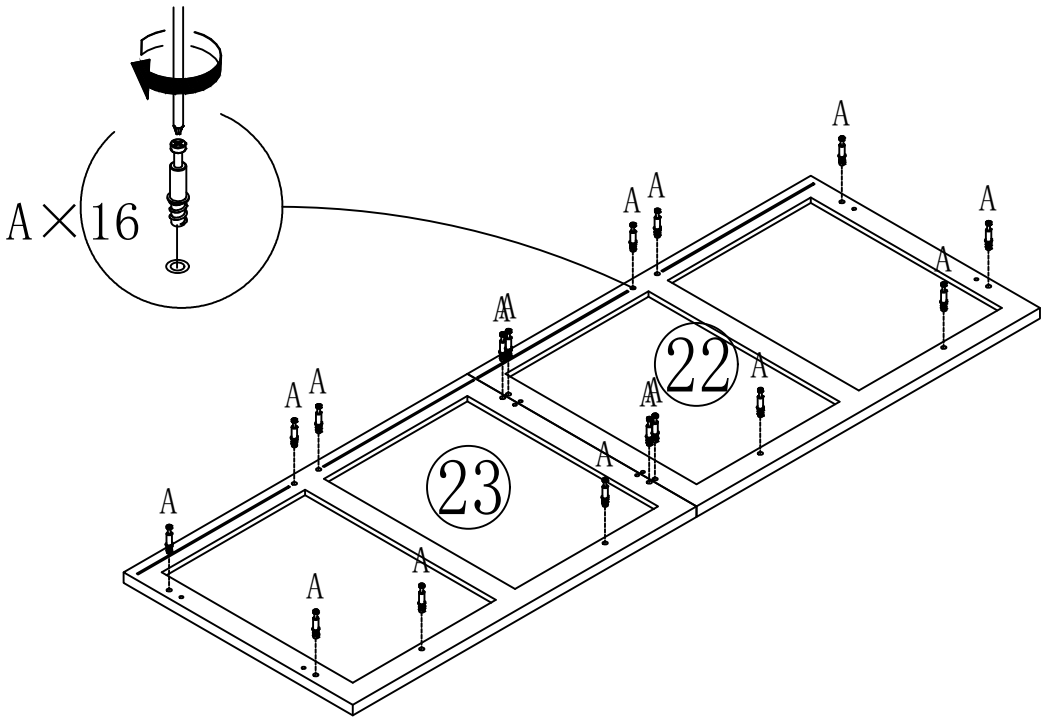

12

B×16 C×8

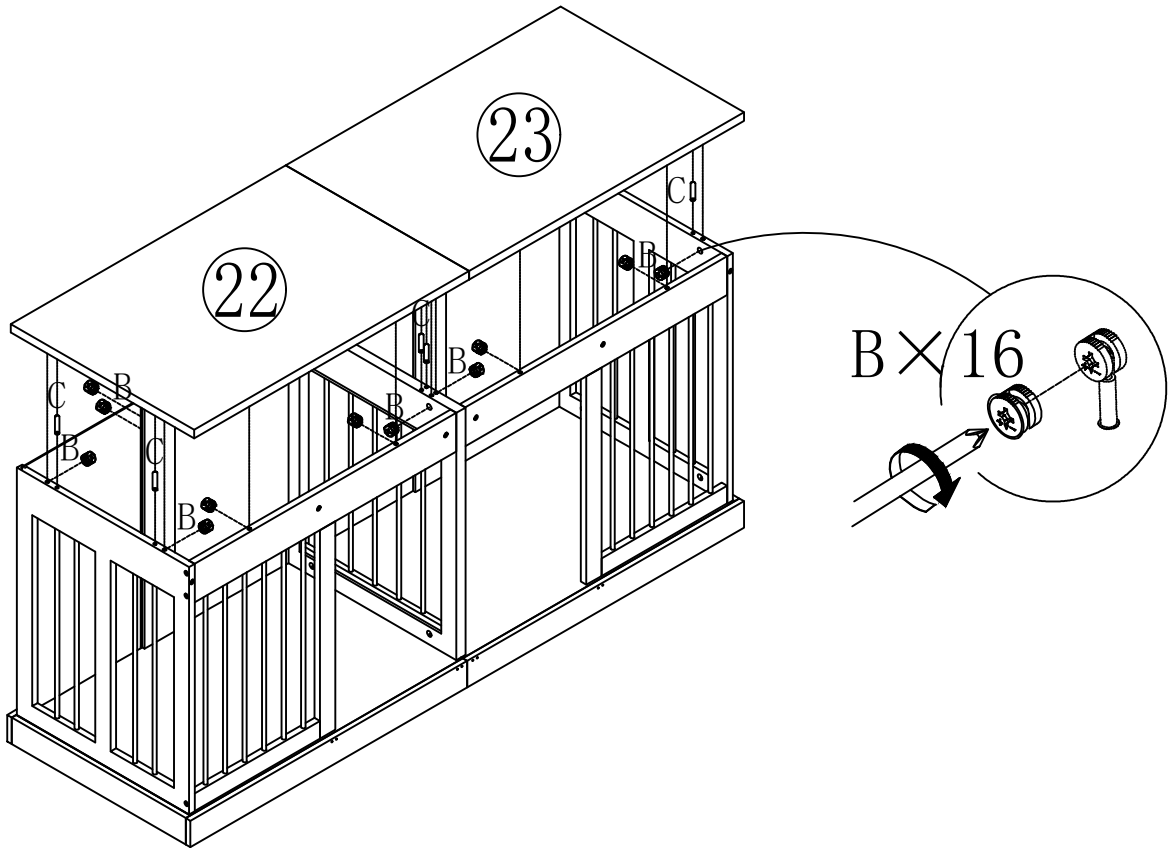

13

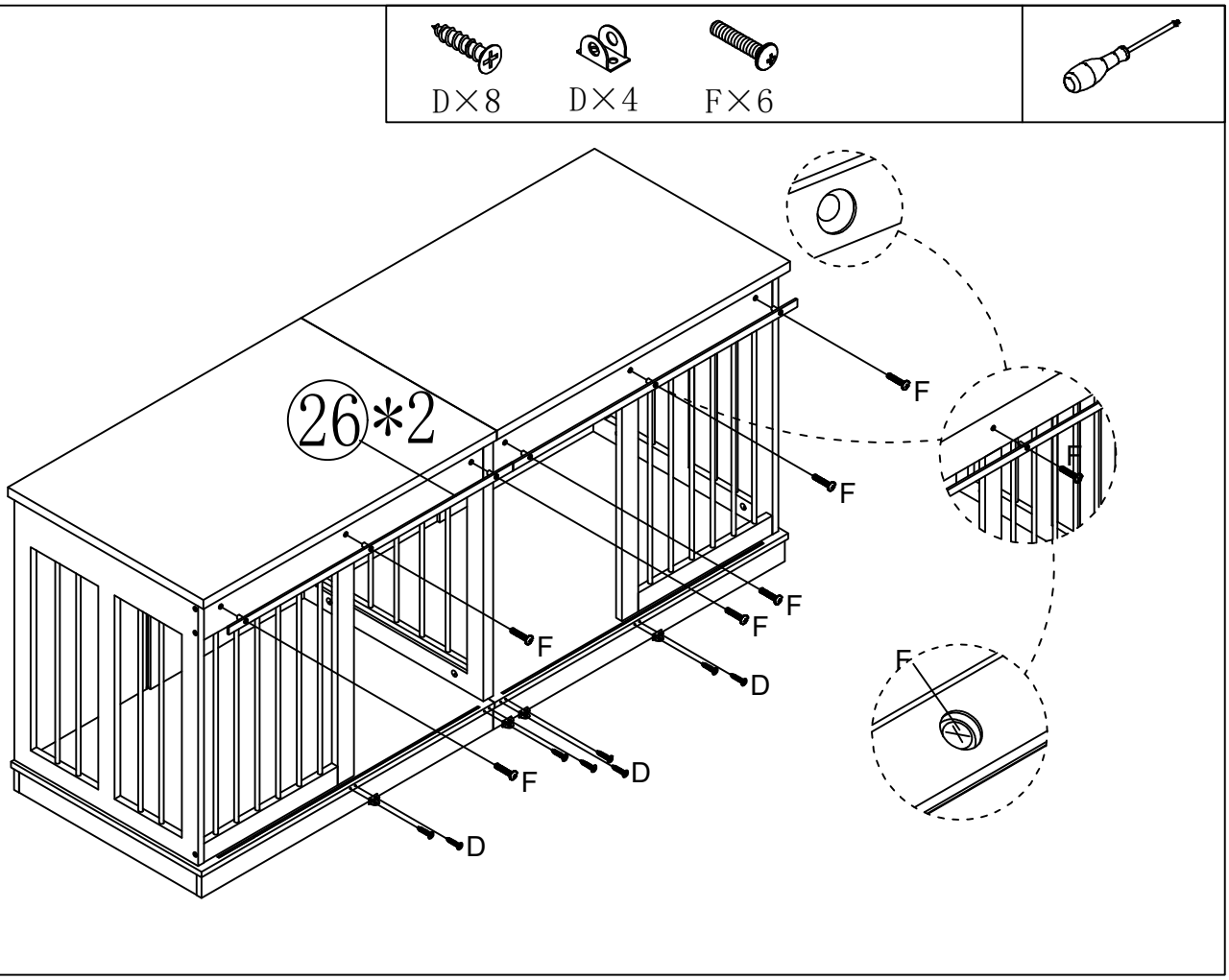

14

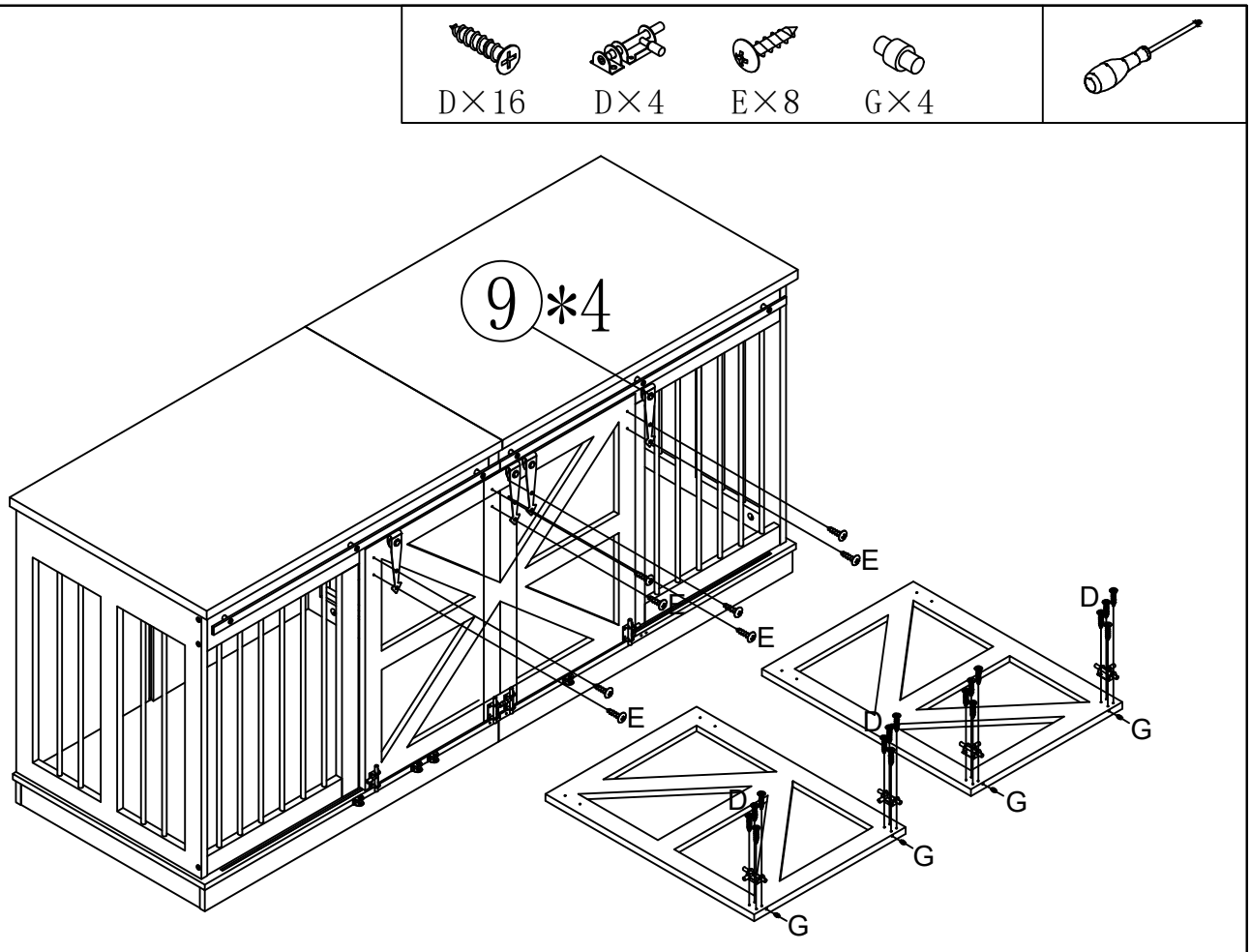

15

H×60

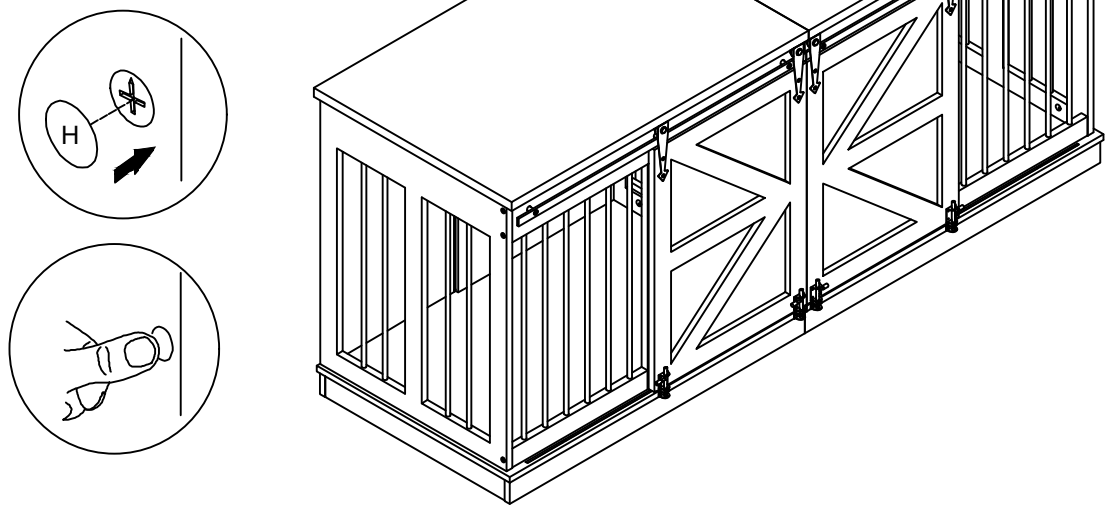

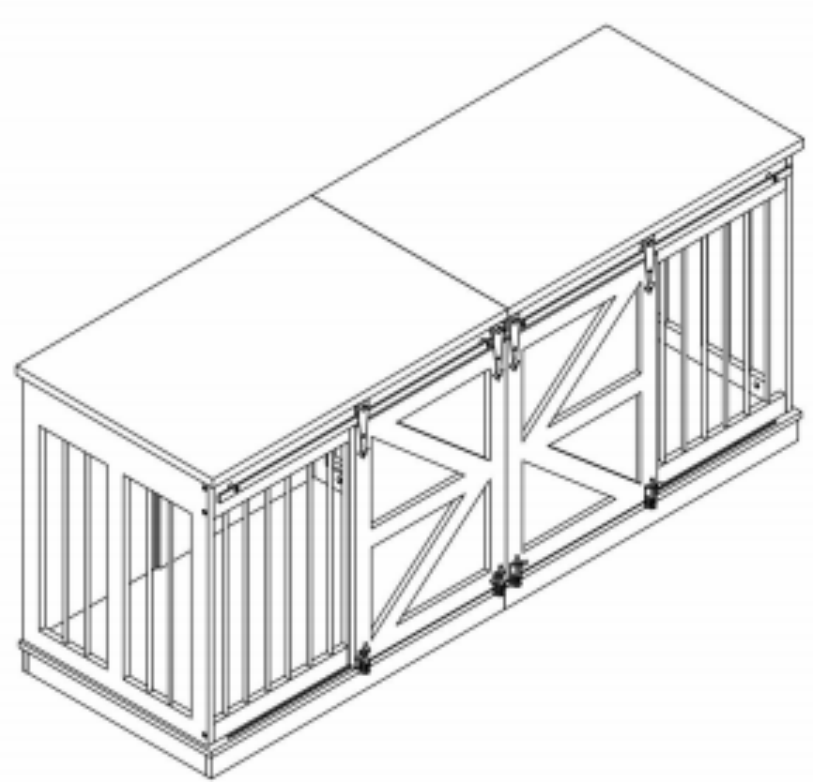

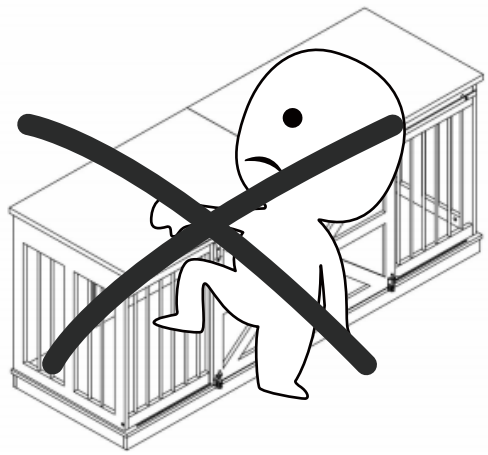

Serious or fatal crushing injuries can occur from furniture tip-over.
To further reduce the risk of serious injury and death from tip-overs:

Schwere oder tödliche Quetschverletzungen können durch Umkippen von Möbeln auftreten.
Um das Risiko schwerer Verletzungen und Todesfälle durch Umkippungen weiter zu reduzieren.

●We will only use the information provided on this card to contact you when there is a safety alert or recall for this product.

●We will not sell, rent, or share your personal information.

●If you encounter any problems during the use/installation process, please fill out the following information and send it to CSTSERVICEASAP@outlook.com. Your issue will be resolved within 12 hours.

1. SKU provided on the first page of the manual:
2. Order number:
3.Name:
4.Address:
5.City:
6. Postal code: