Assembling lnstruction

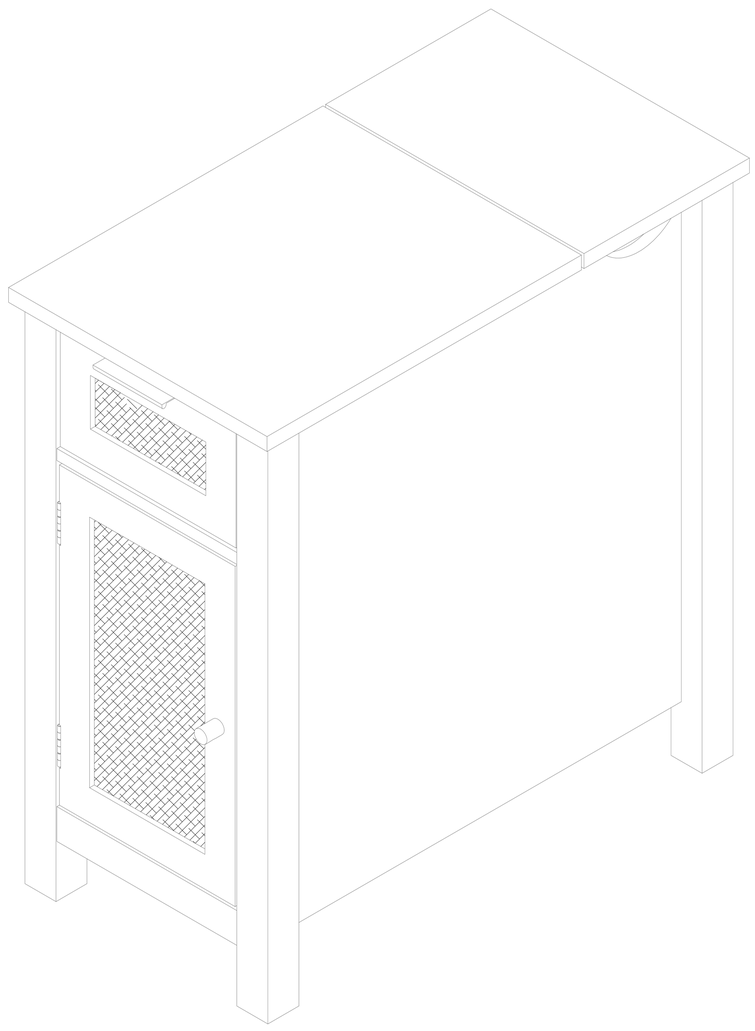

ATTENTION

If there is any missing, please kindly send us messages to let us know the name of missing part regarding to the first page of instructions.

We will send replacement to you asap. We are concerned about each customer's experience, if there is any loss or damage, please contact us at any time, we will provide effective solutions.
Customer service.
Please attach your Oder ID so that we can assist you better.

General Assembly Guidelines

I. Ensure that all parts and hardware are available before beginning assembly.

II. Follow each step carefully to ensure the proper assembly of this product.

III. Two people are recommended for ease in the assembly of this product.

IV. The three main types of hardware used to assemble this product are : wood dowels , screws and bolts.

V. A Phillips head screwdriver is required for the assembly of this product .

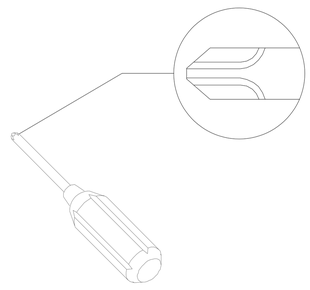

VI. Power tools should not be used to assemble this product .

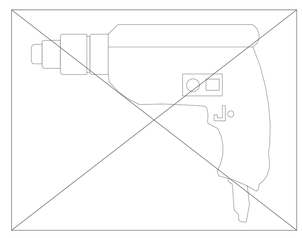

Parts List

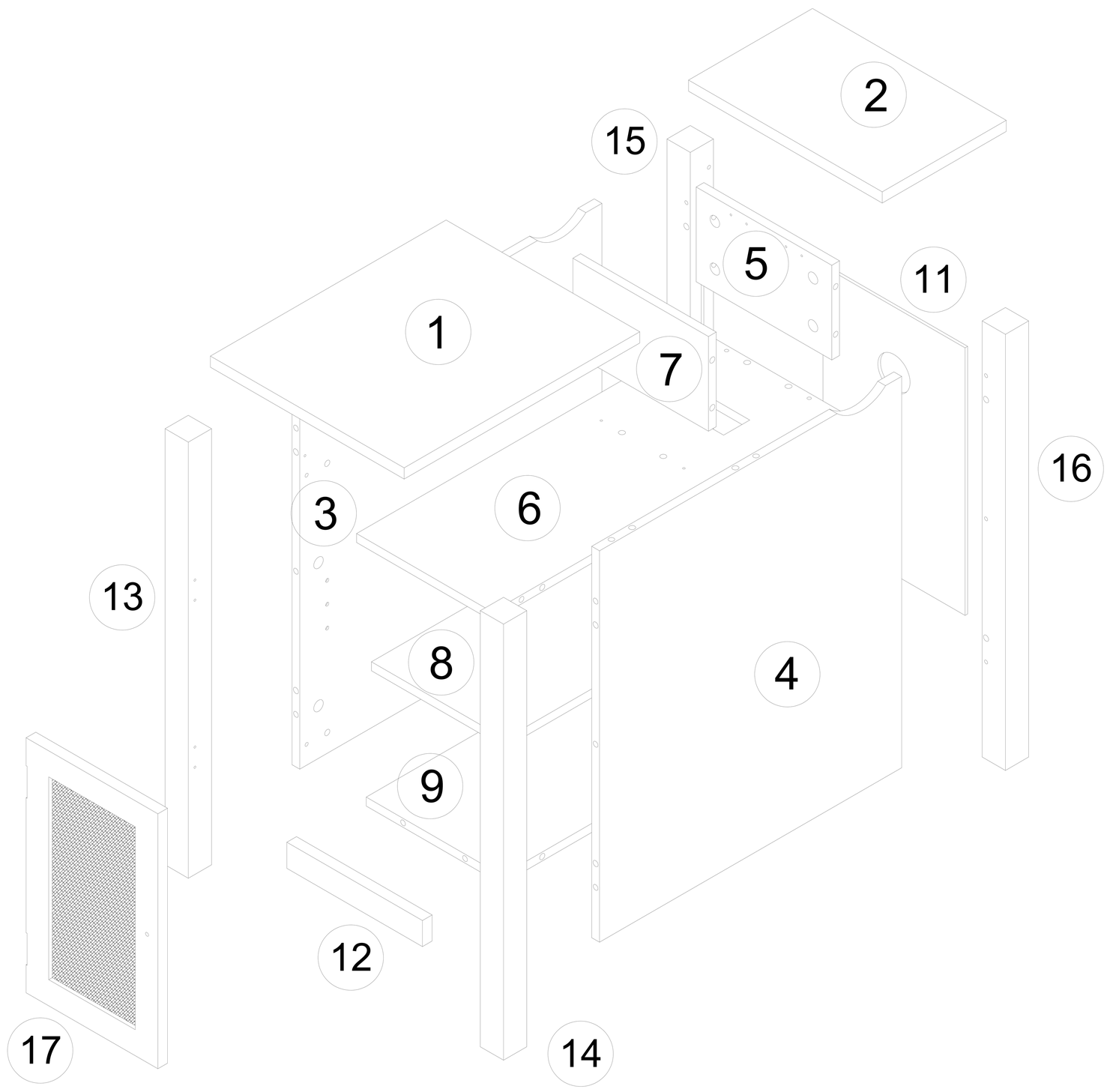

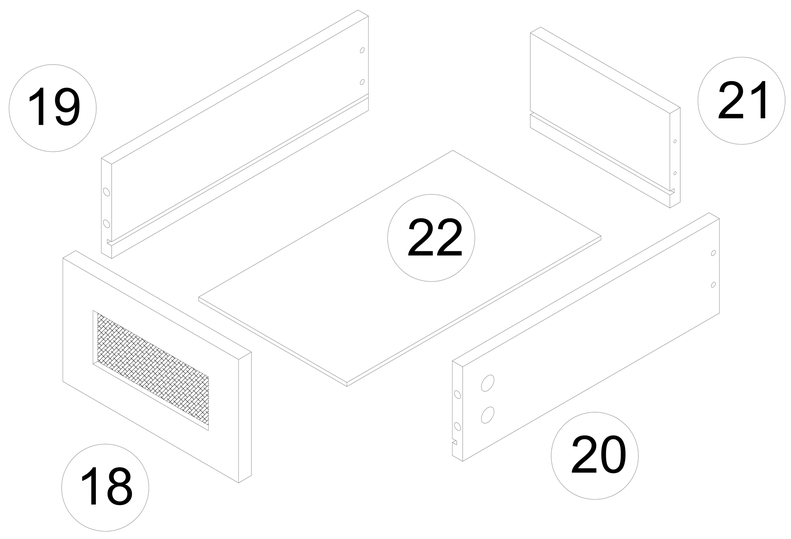

HARDWARE PACK CONTENT

A	B	C	D	E	F
∅ 6*35mm	∅ 15*10mm	∅ 6*30mm	∅ 4*35mm	∅ 3*16mm	∅ 4*18mm
38X + 4	38X + 4	28X + 3	8X + 1	2X	1X
G	H	I	J	K	L
1X	1X	1X	4X	∅ 3*12mm 33X+4	1X
M	N	O	P	CL	CR
4X	1X	∅ 20mm 14X + 1	1X	300 mm 1X	300 mm 1X
DL	DR				
300 mm 1X	300 mm 1X				

Philips head screwdriver required for assembly

(not included)

The hardware quantities listed above are required for proper assembly.
Some extra hardware may also have been included.

Step 1

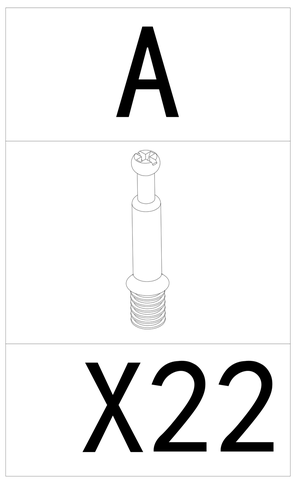

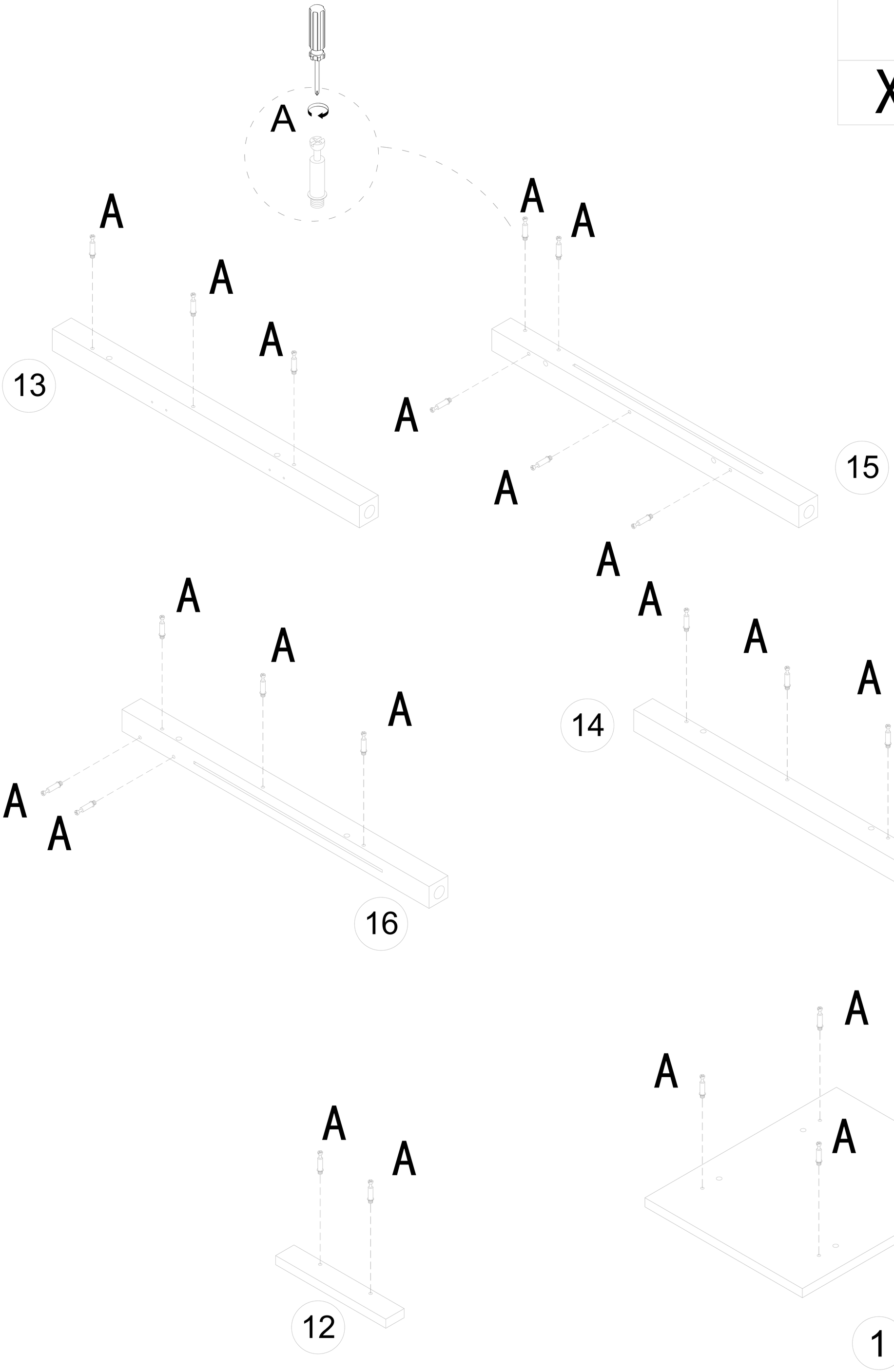

Step 2

Note:Use #3 board to connect #13 and #15 legs,
Use #4 board to connect #14 and #16 legs;

C	B
	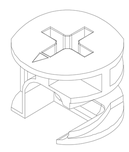
X8	X12

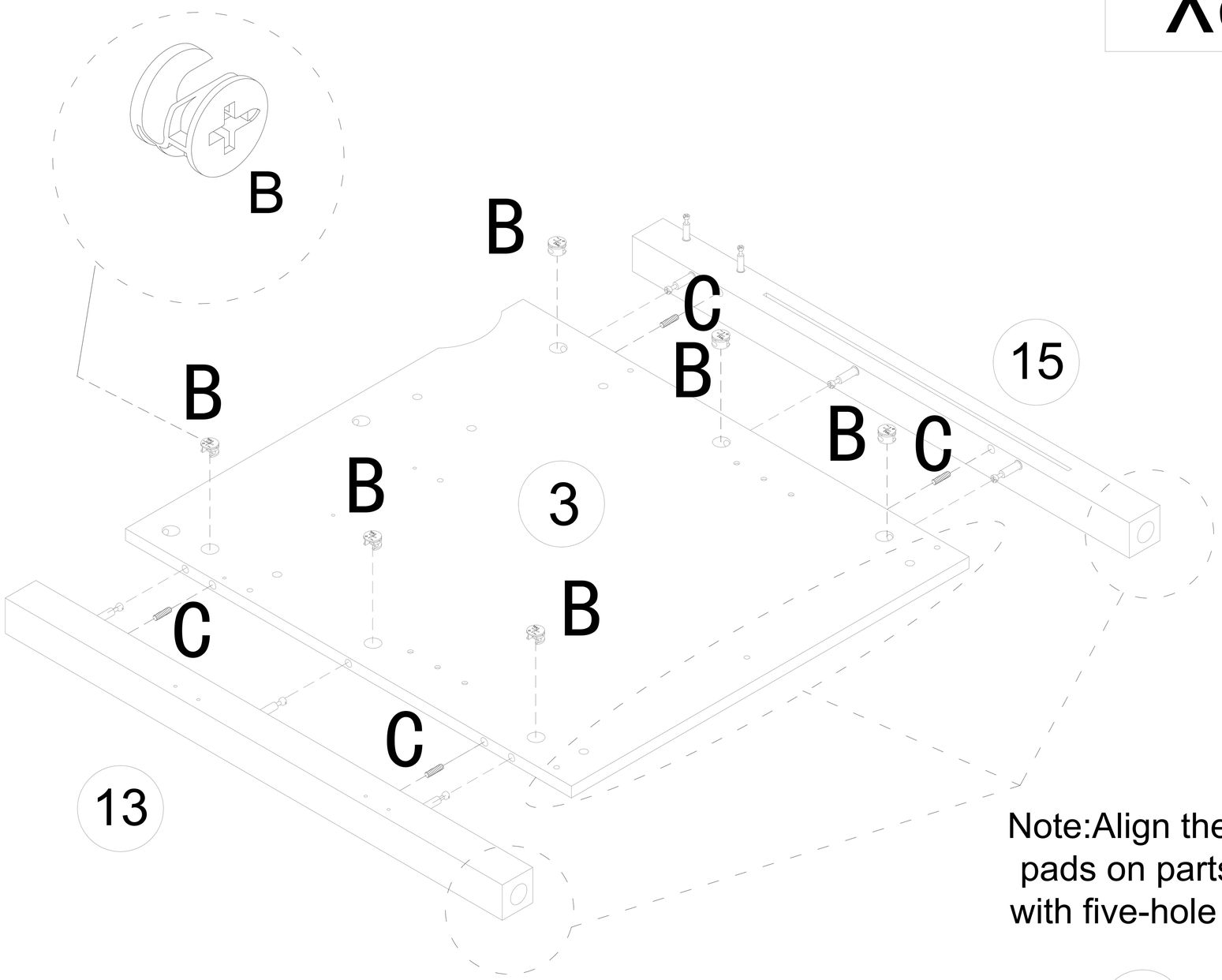

Note:Align the ends with white plastic
pads on parts#13,#15,#14 and #16
with five-hole sides of panels #3 and #4;

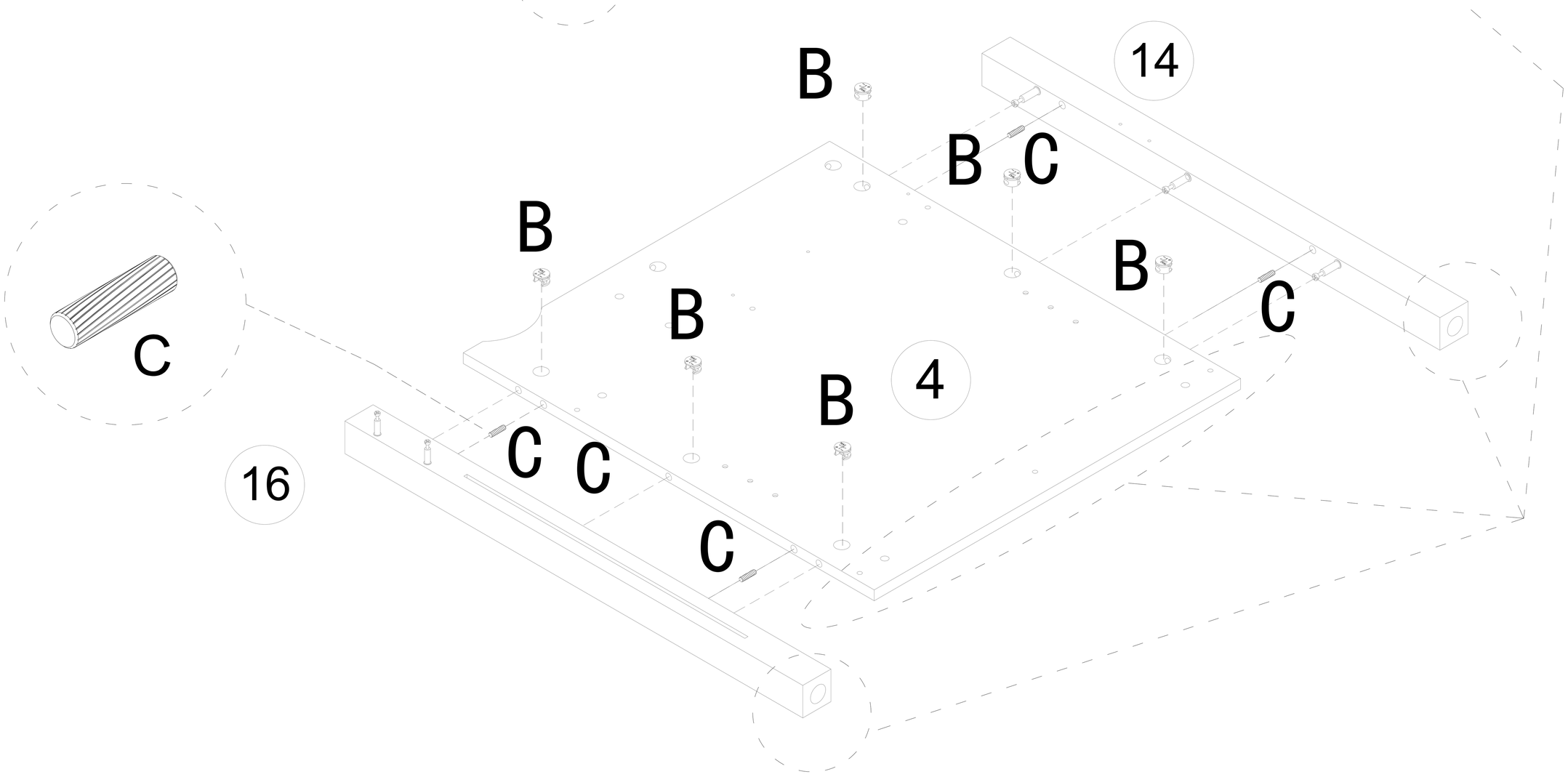

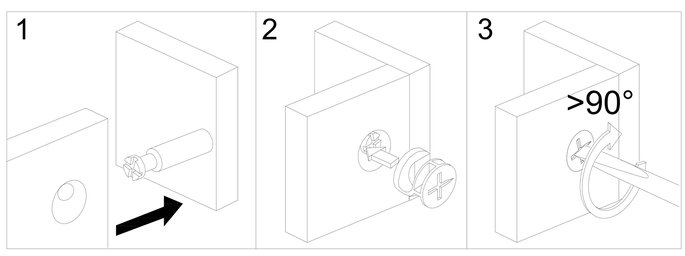

Step 3

CR	CL	K
X1	X1	X6

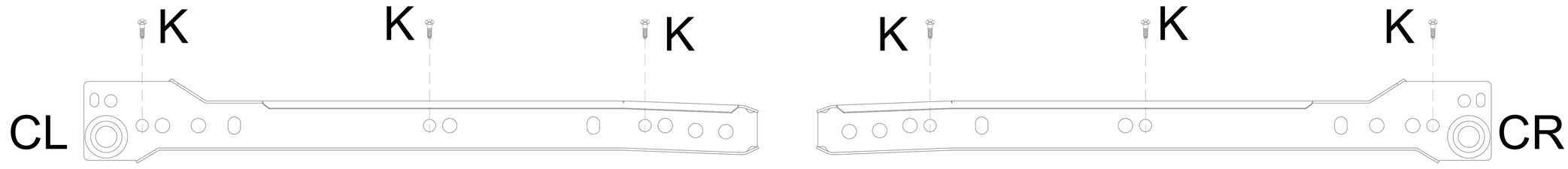

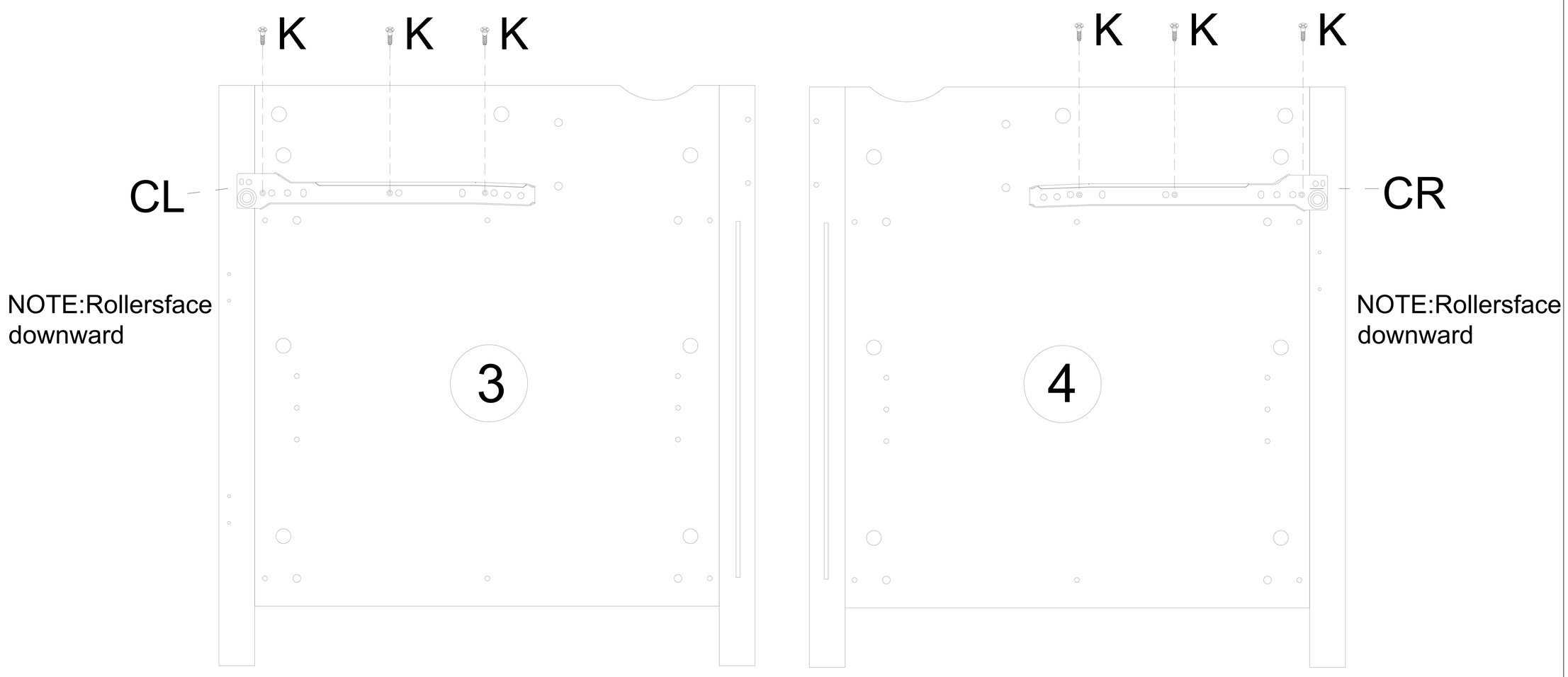

Step 4

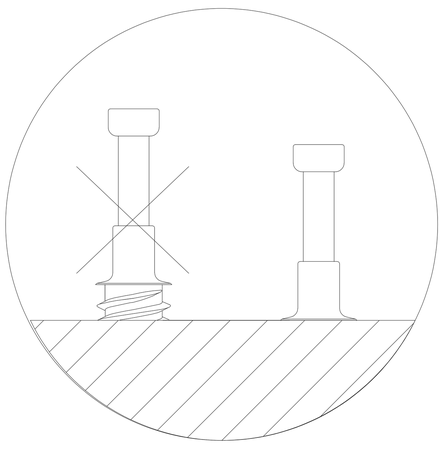

K	J	E	H	A
X4	X2	X2	X1	X12

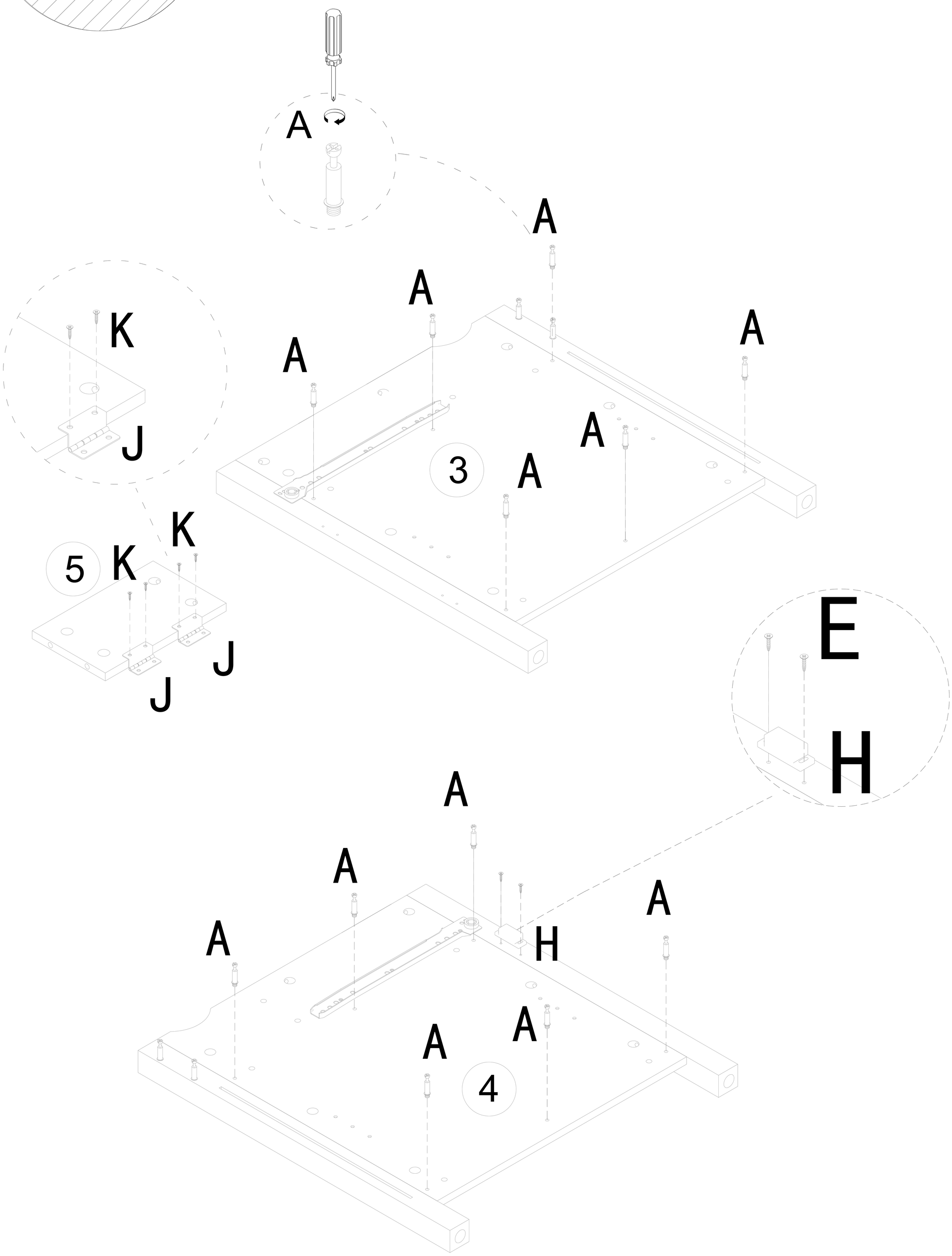

Step 5

D	C	B
X4	X4	X2

Note:Ensure the cam lock hole of #5 towards #7

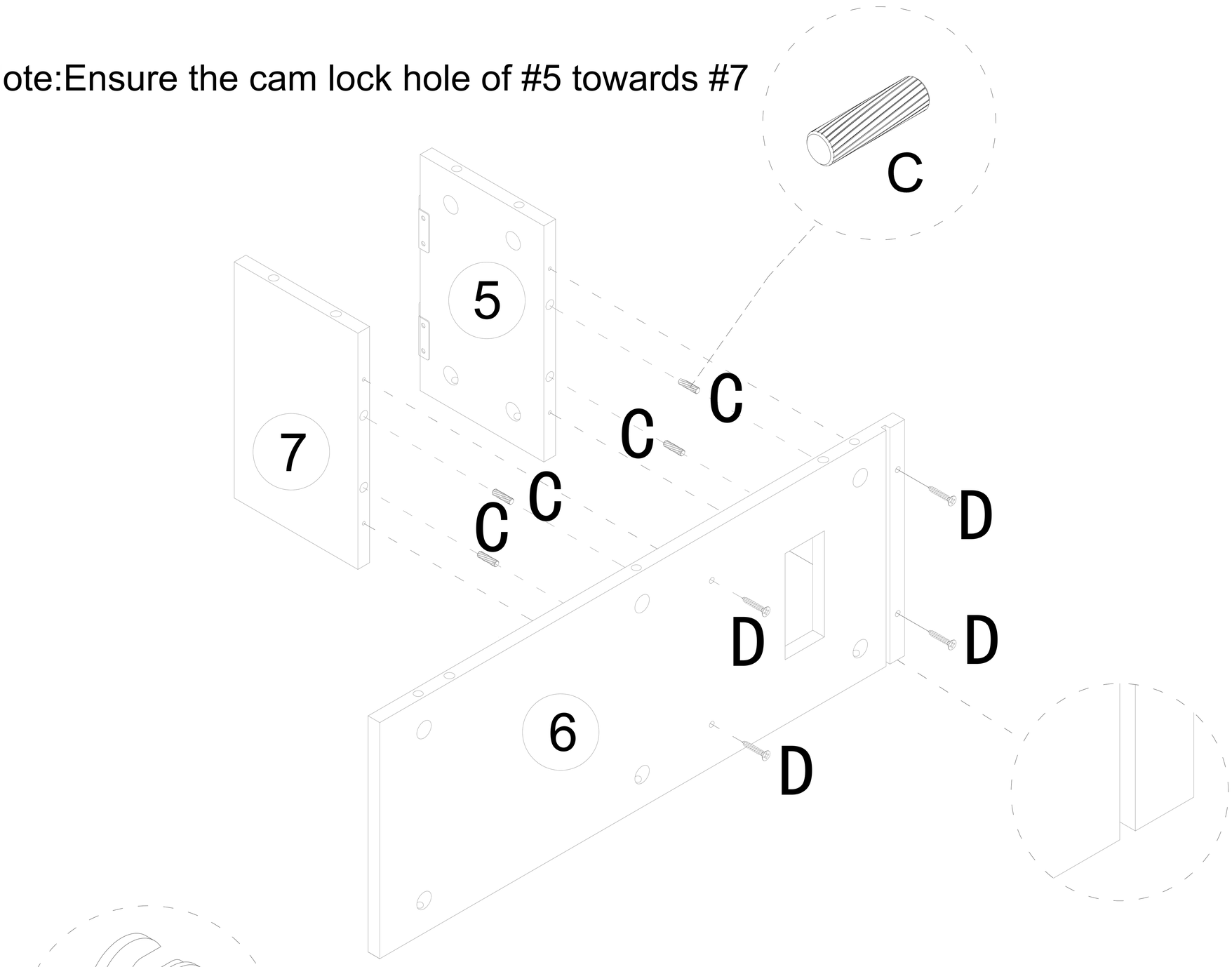

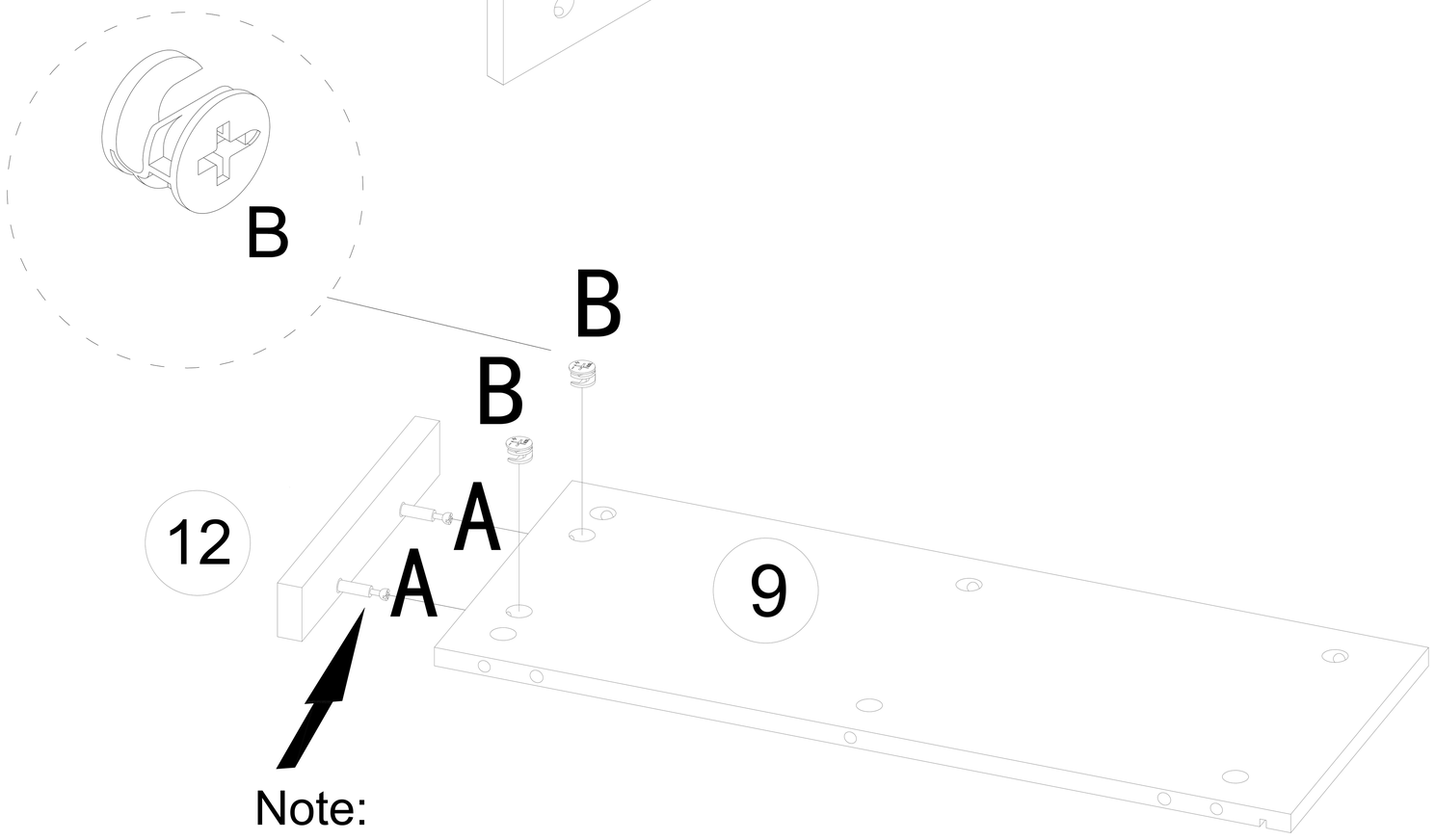

Note:
Side with bolts A should be positioned lower.

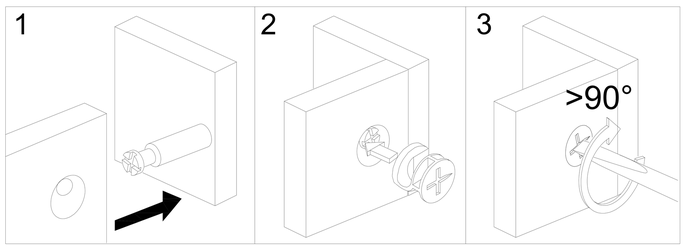

Step 6

C	B	P
	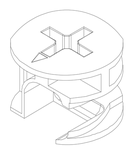	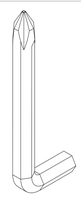
X4	X5	X1

Note: When securing the #B part in the lower section of the #5 board, there is limited space. Use only the #P screwdriver

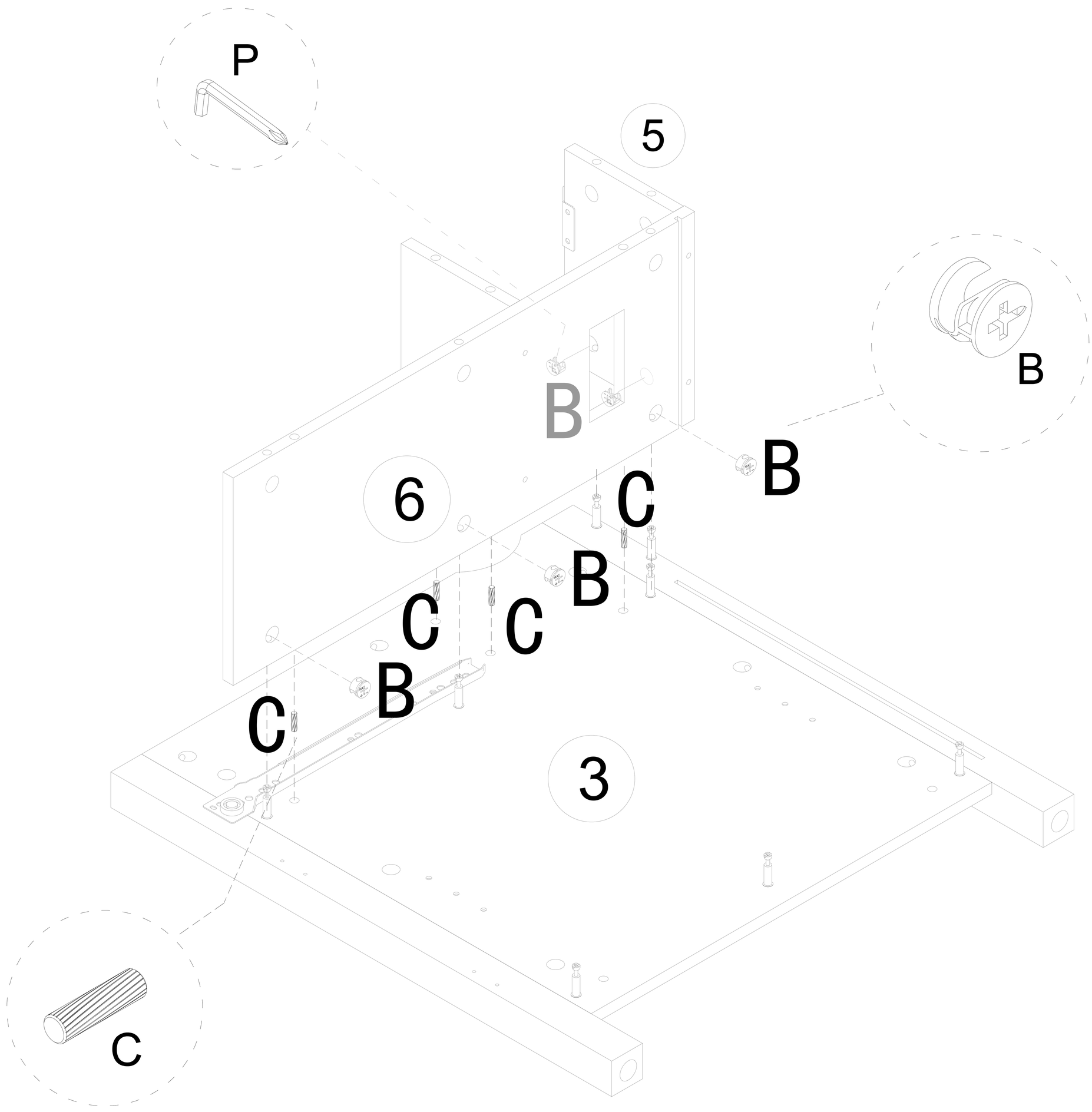

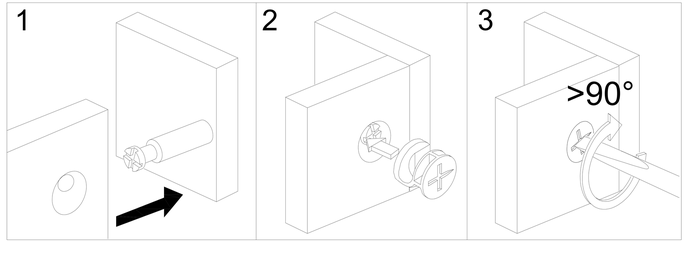

Step 7

C	B
	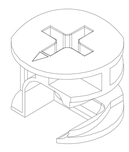
X2	X3

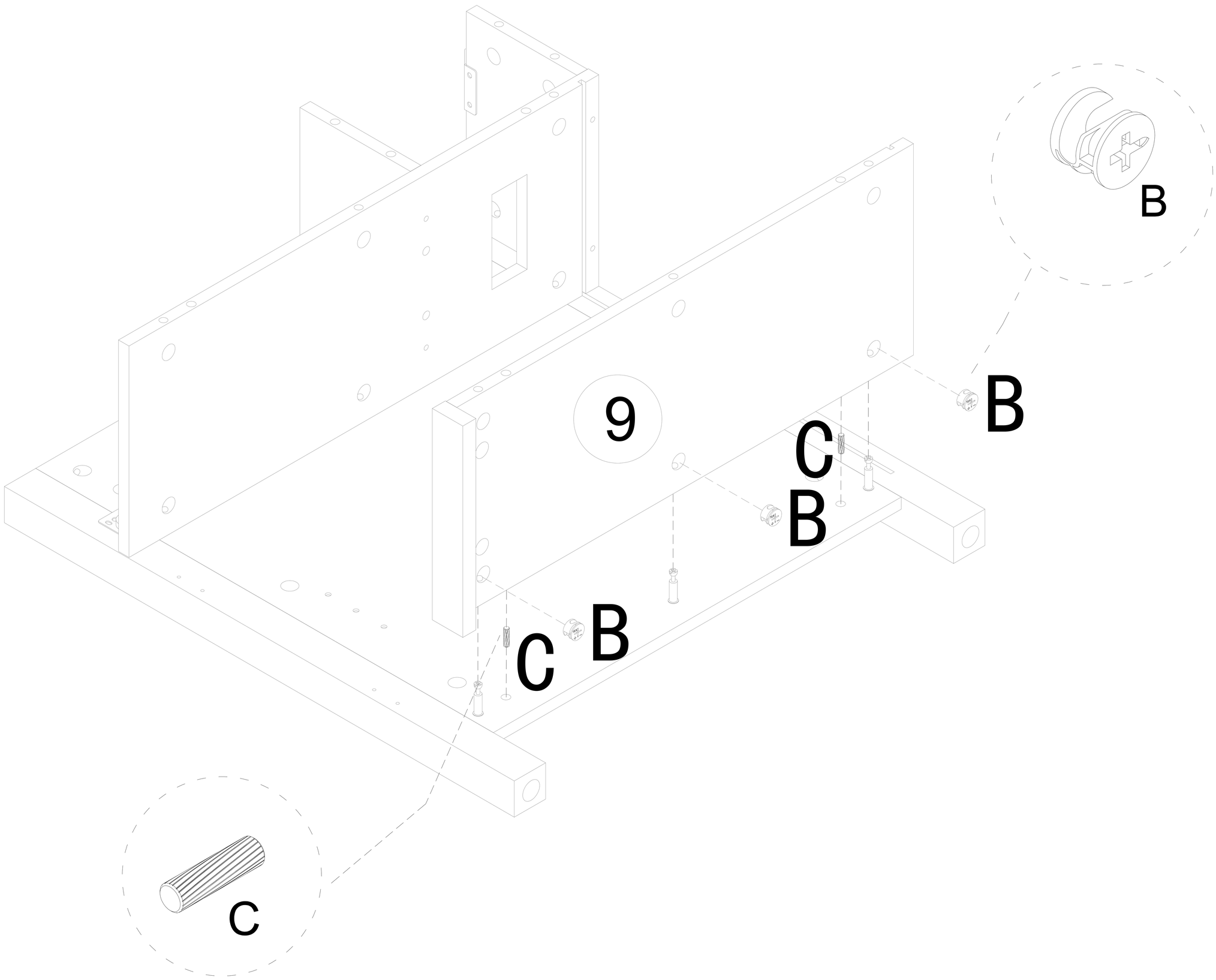

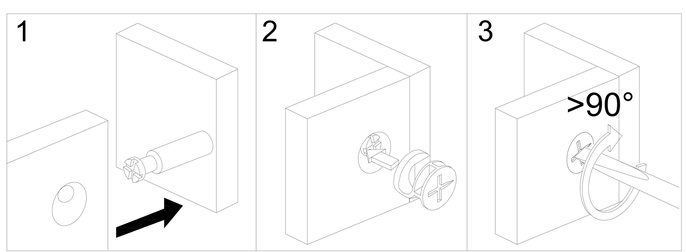

Step 8

Caution:Please be aware the wire hole on #11 is at the left

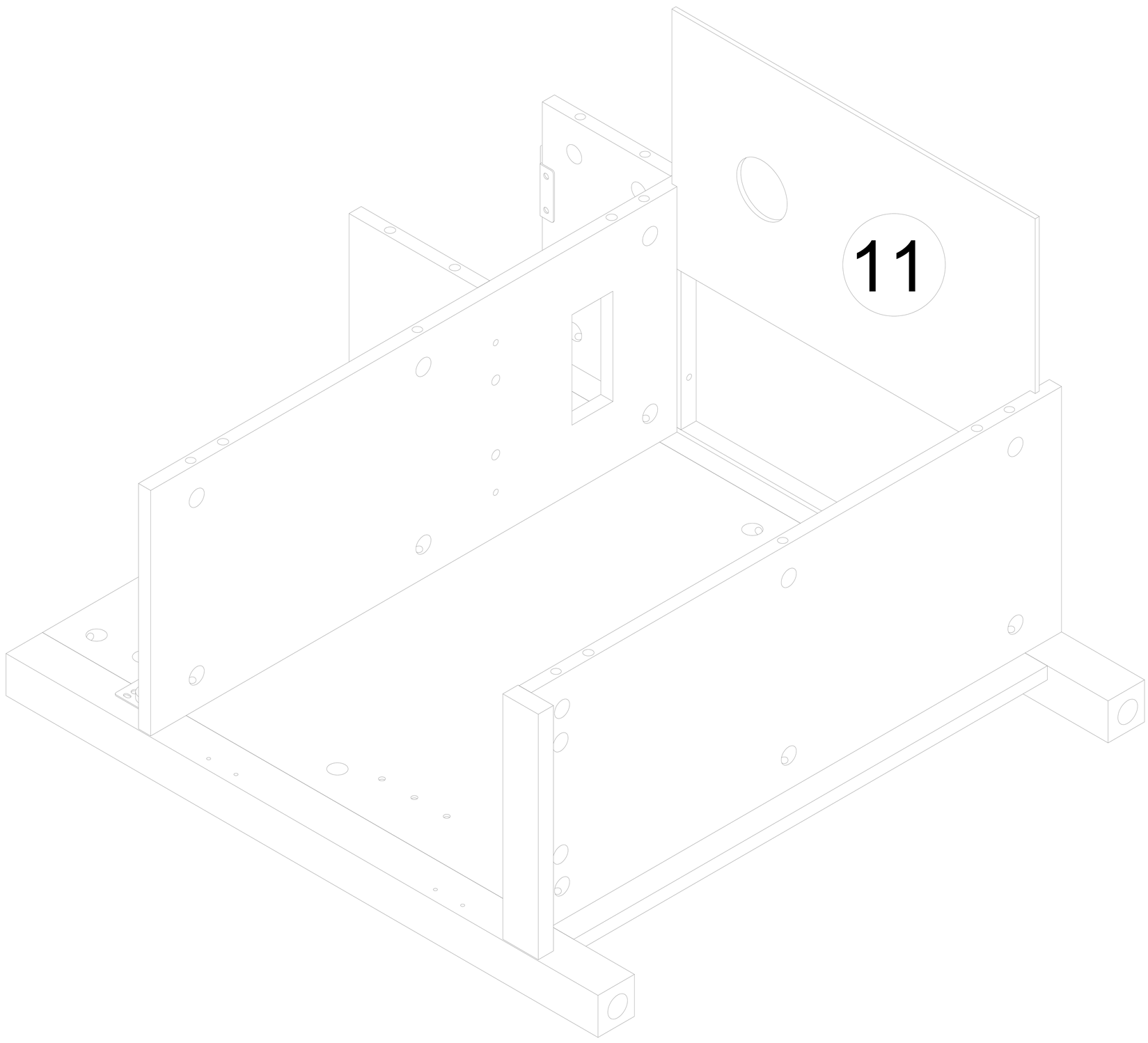

Step 9

C	B	P
X6	X8	X1

Note: When securing the #B part in the lower section of the #5 board, there is limited space. Use only the #P screwdriver

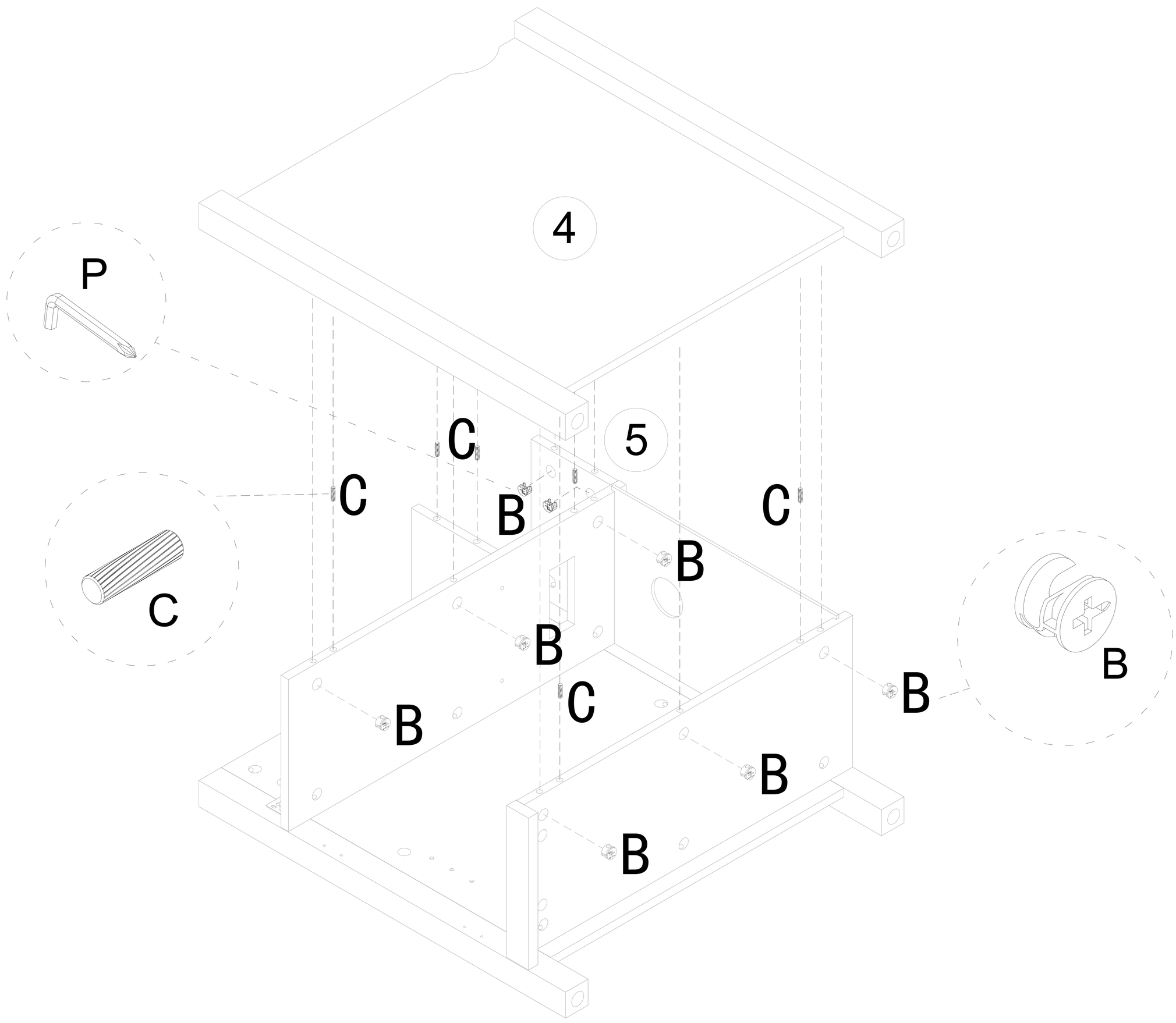

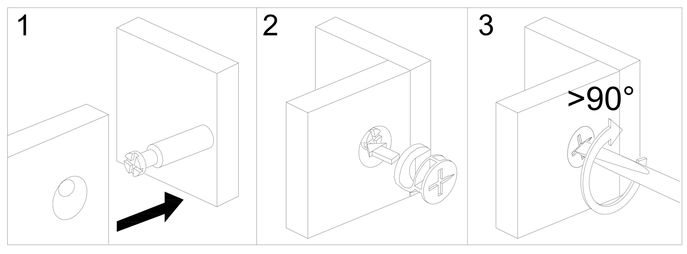

Step 10

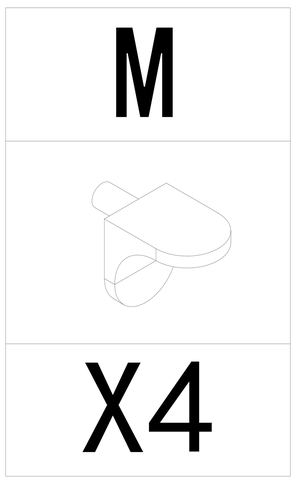

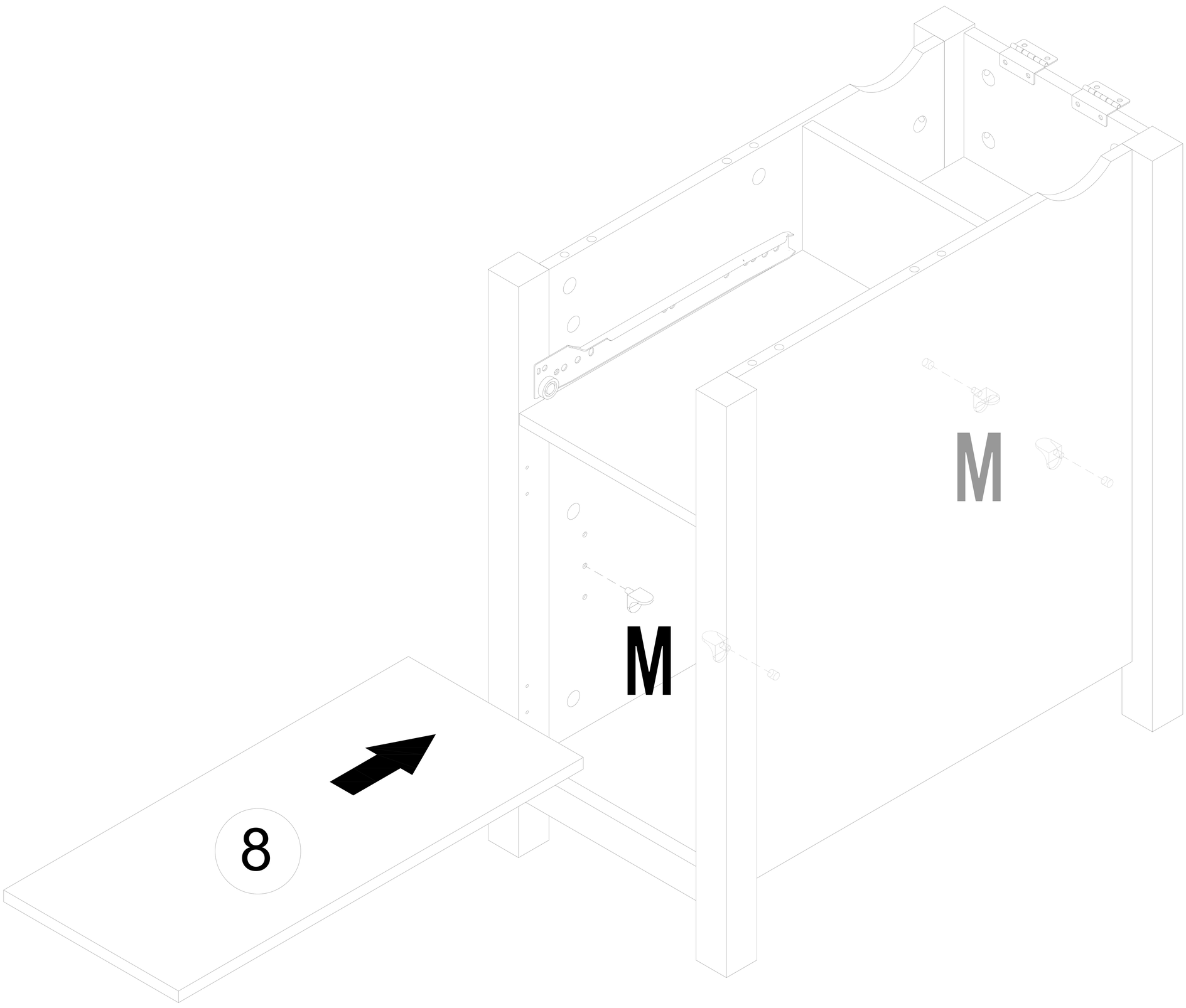

Step 11

K	L
	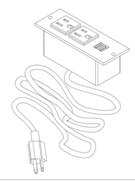
X2	X1

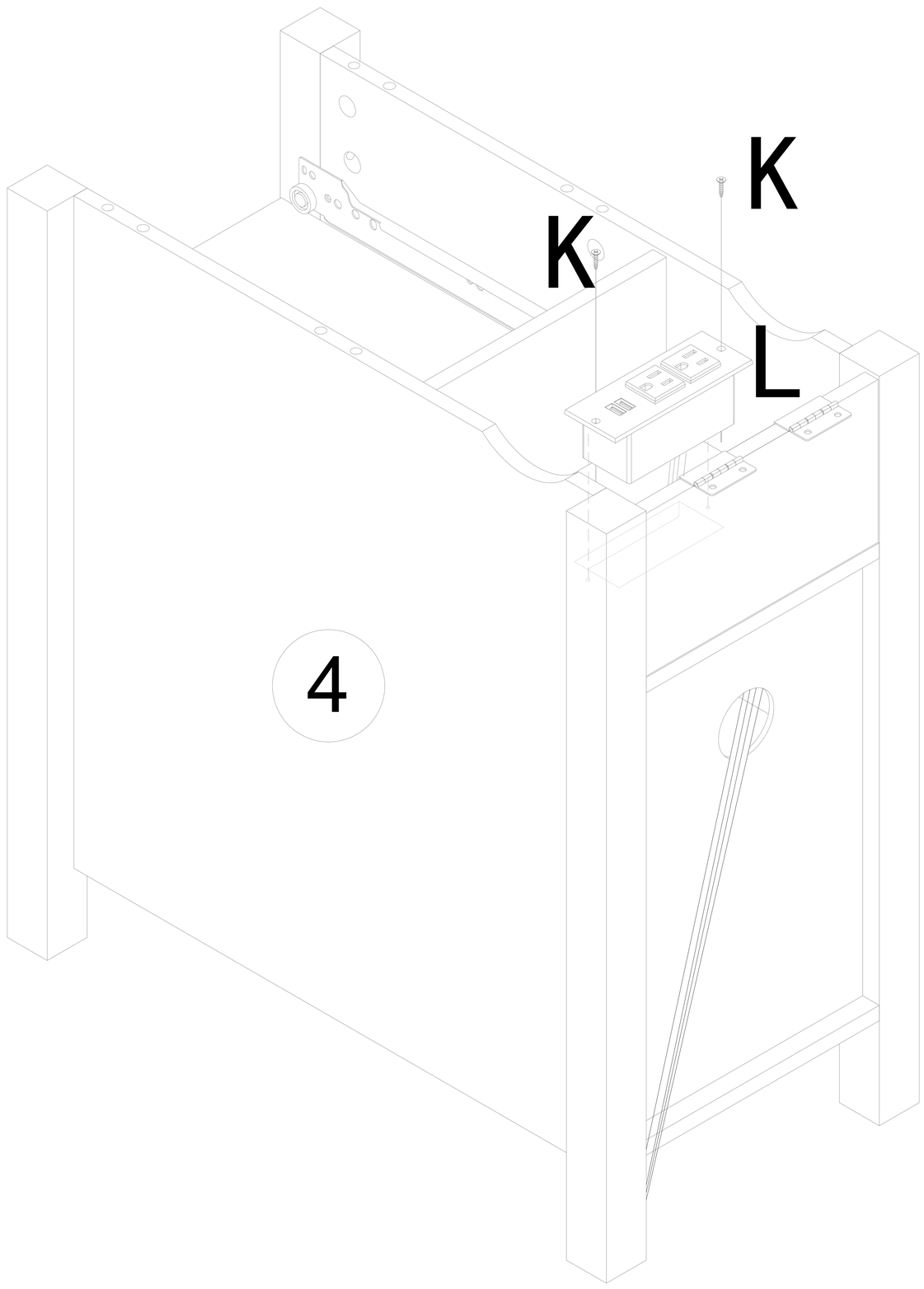

Step 12

K
X4

Note: As shown in the figure, when installing the hinges on the #2 board, stand it upright.

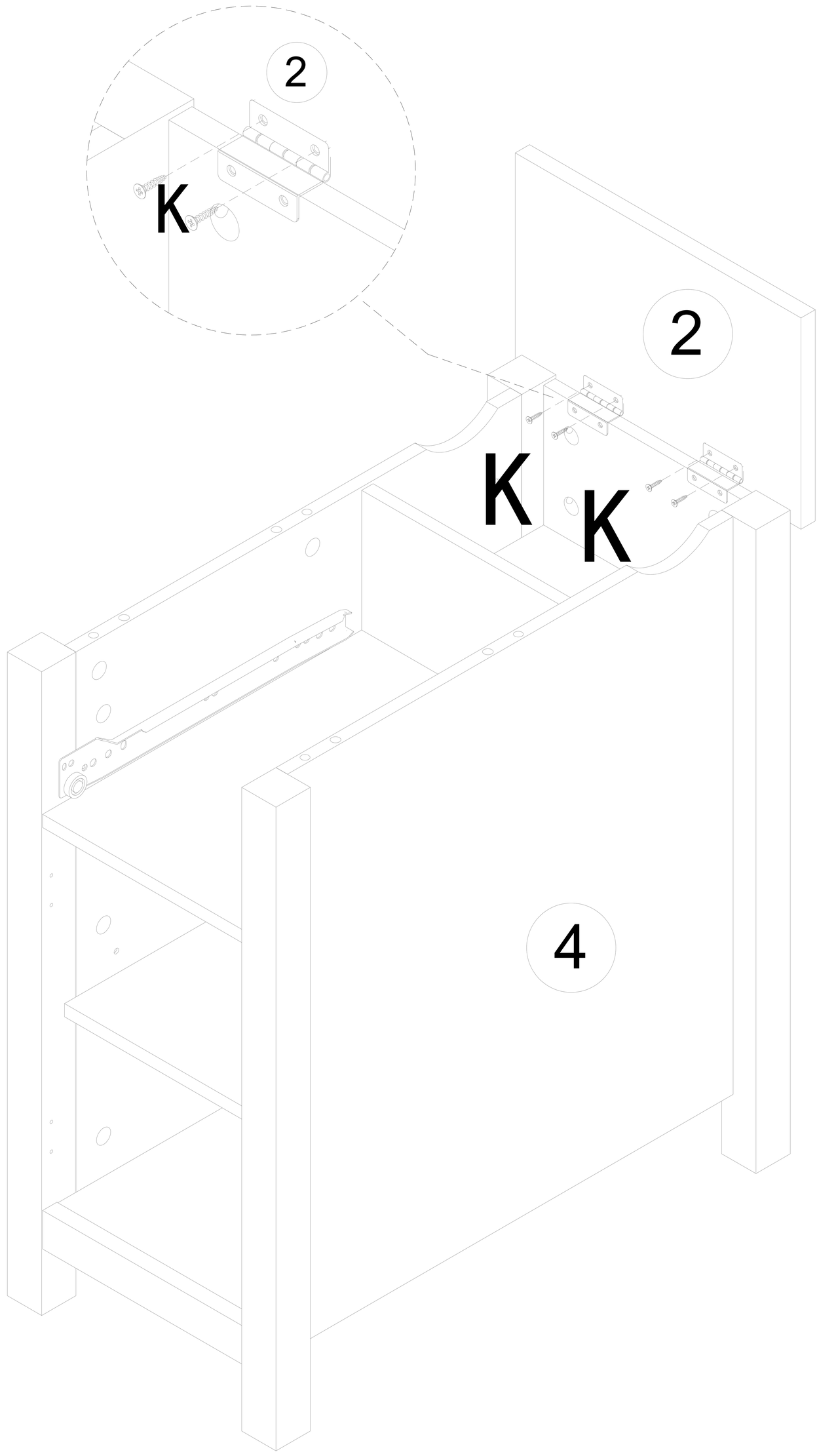

Step 13

F	G	N	K	J
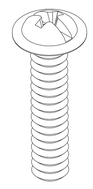		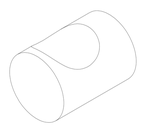	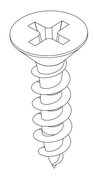	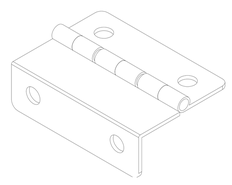
X1	X1	X1	X9	X2

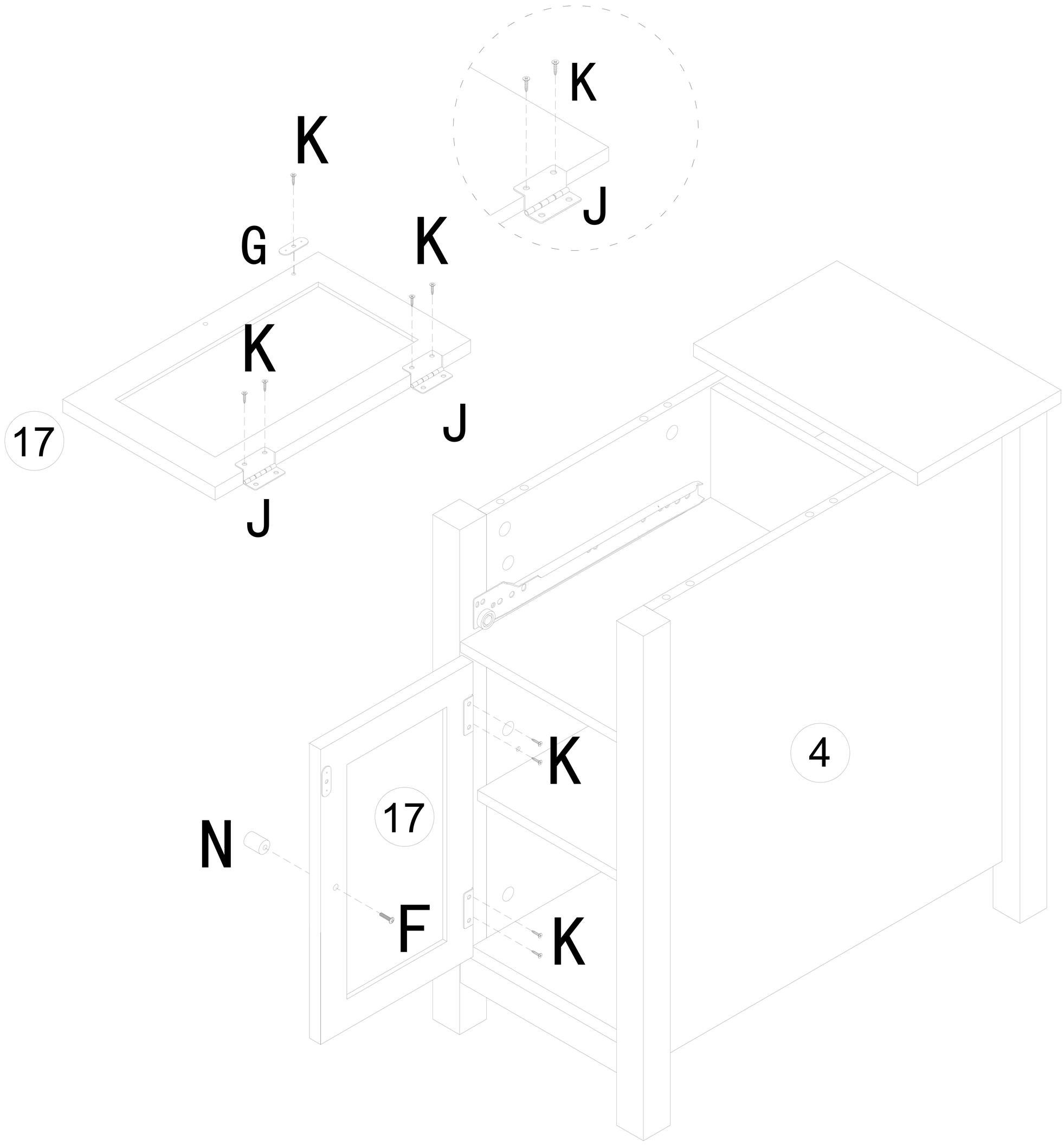

Step 14

C	B
	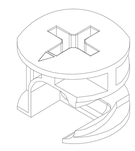
X4	X4

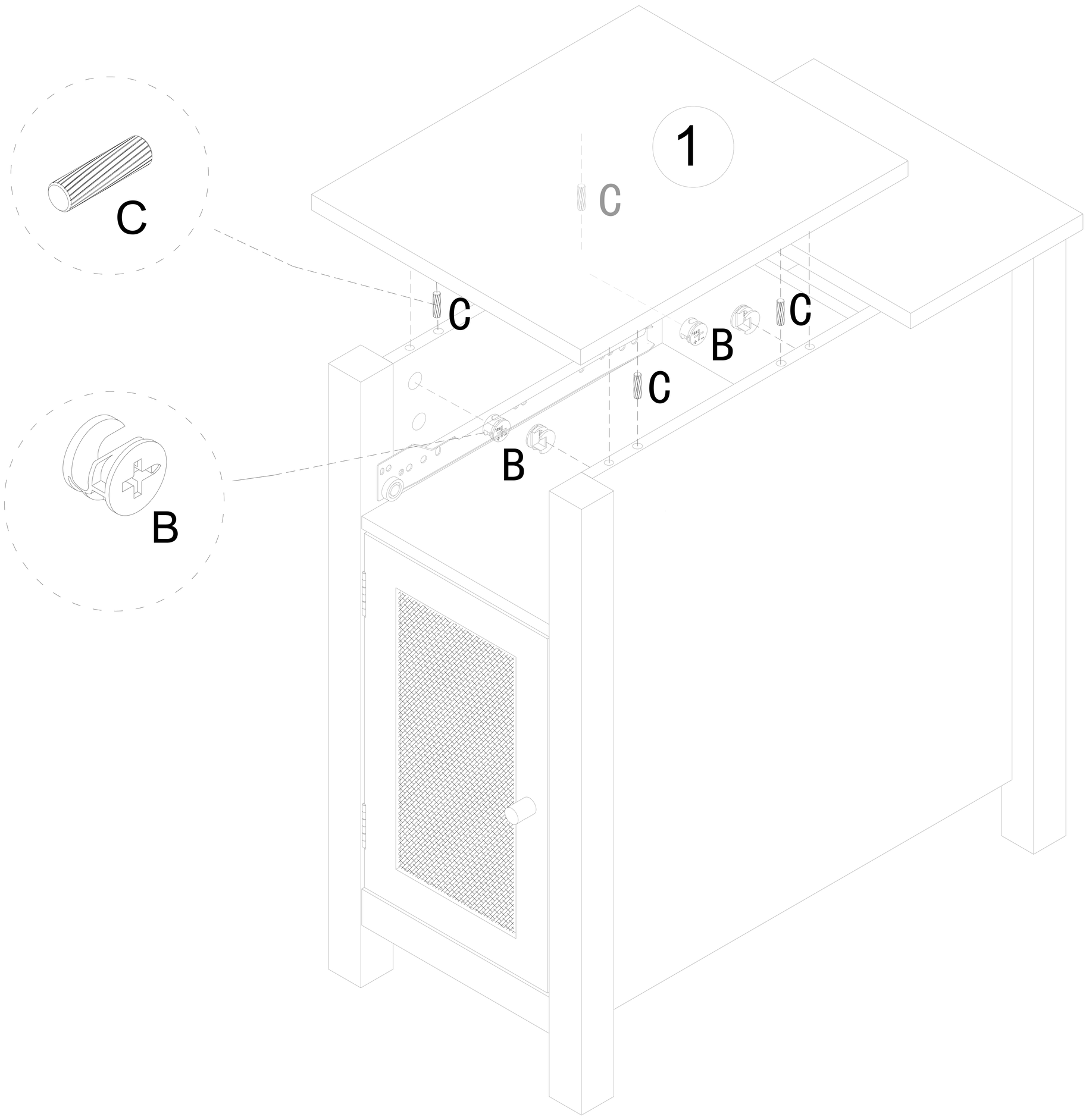

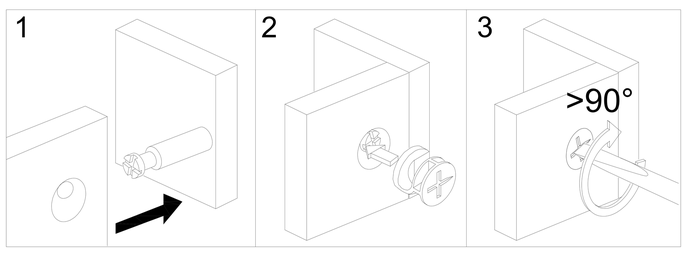

Step 15

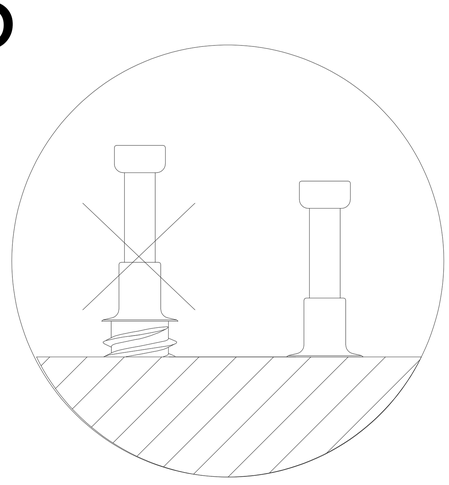

D	B	A
X4	X4	X4

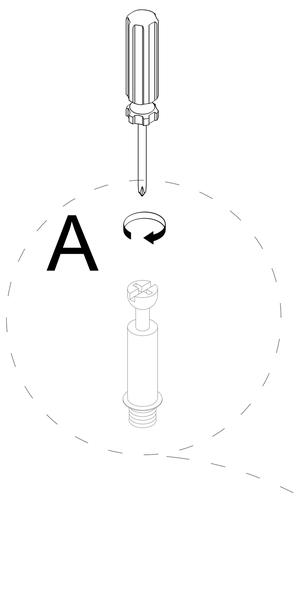

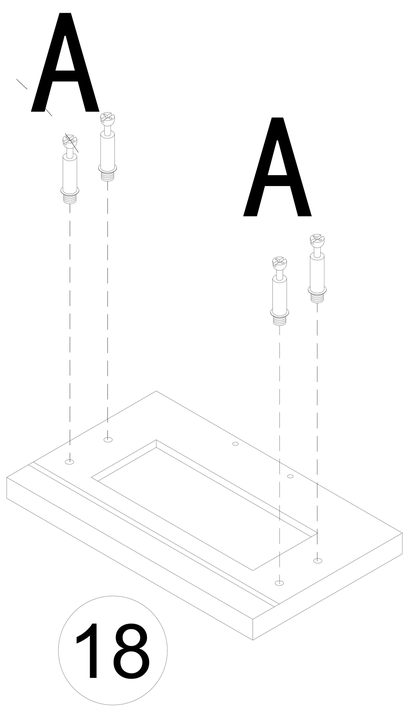

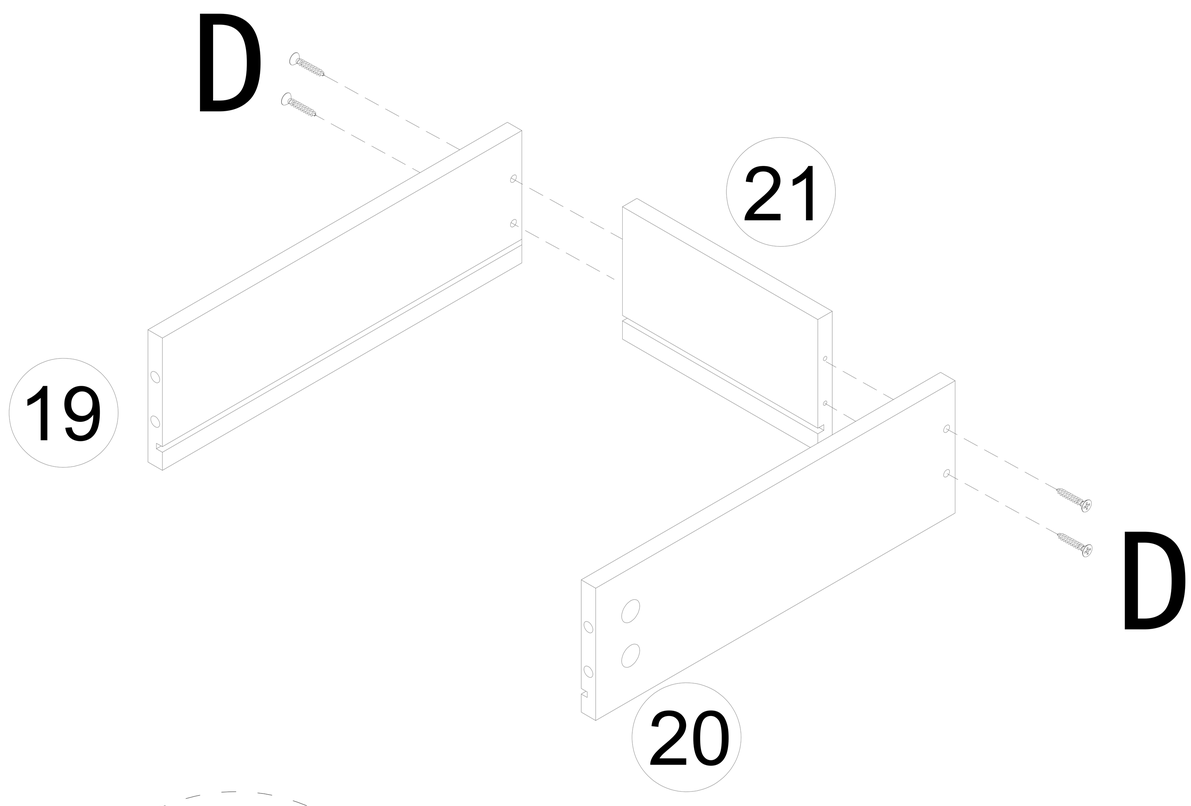

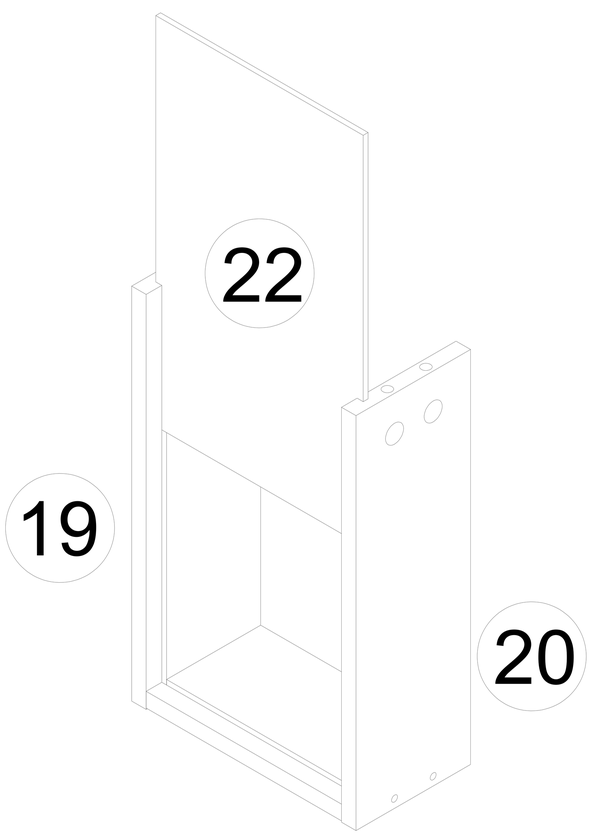

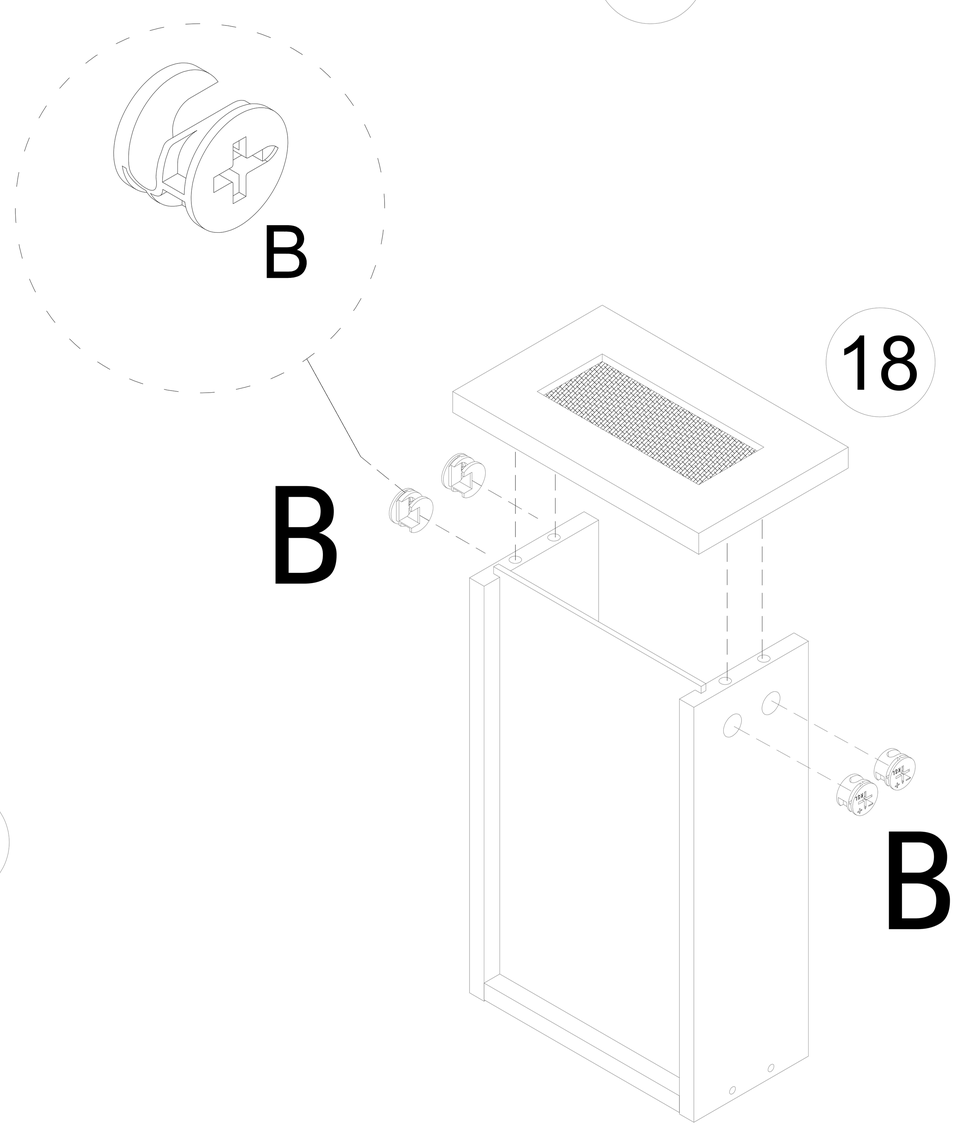

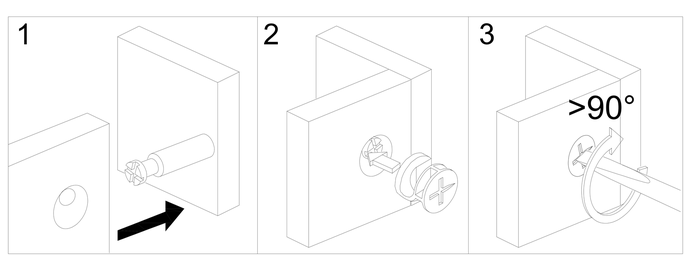

Step 16

K	I	DL	DR
X8	X1	X1	X1

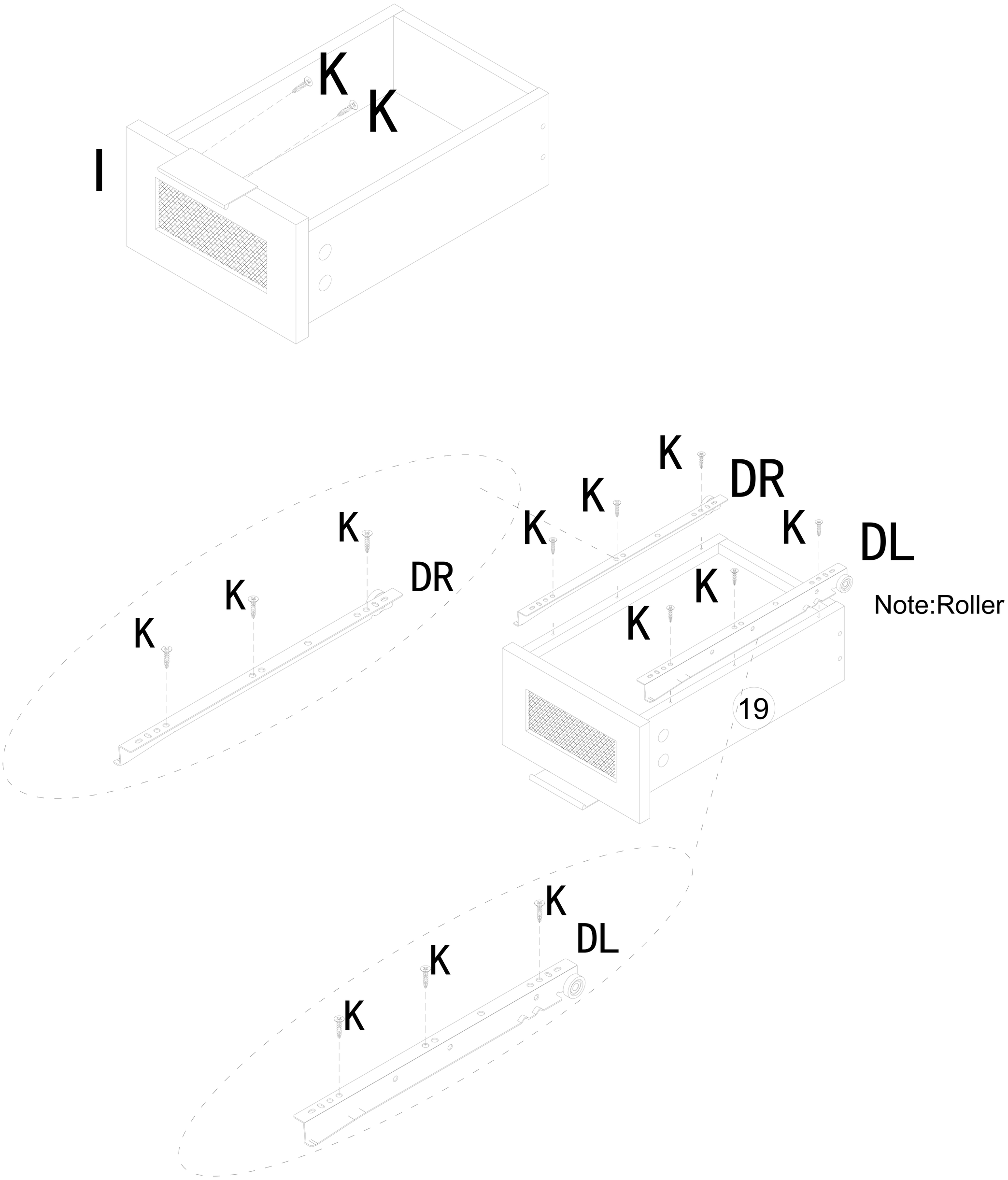

Step 17

0
○
X14

Note:
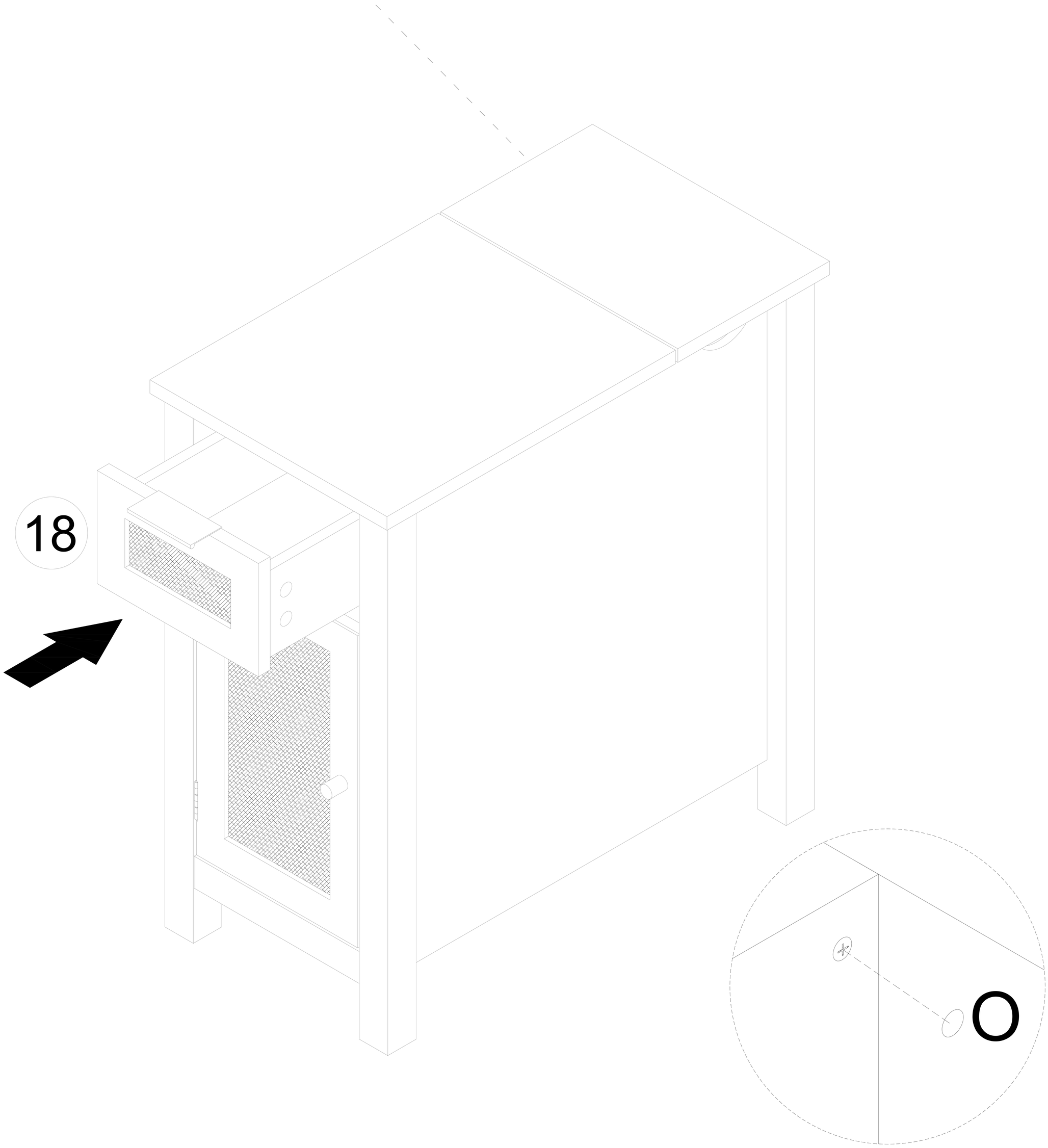
1. To open the top, lift it from edges.
2. Make sure gently release the top after flipping it.