ASSEMBLY INSTRUCTIONS

Quick Start Guide

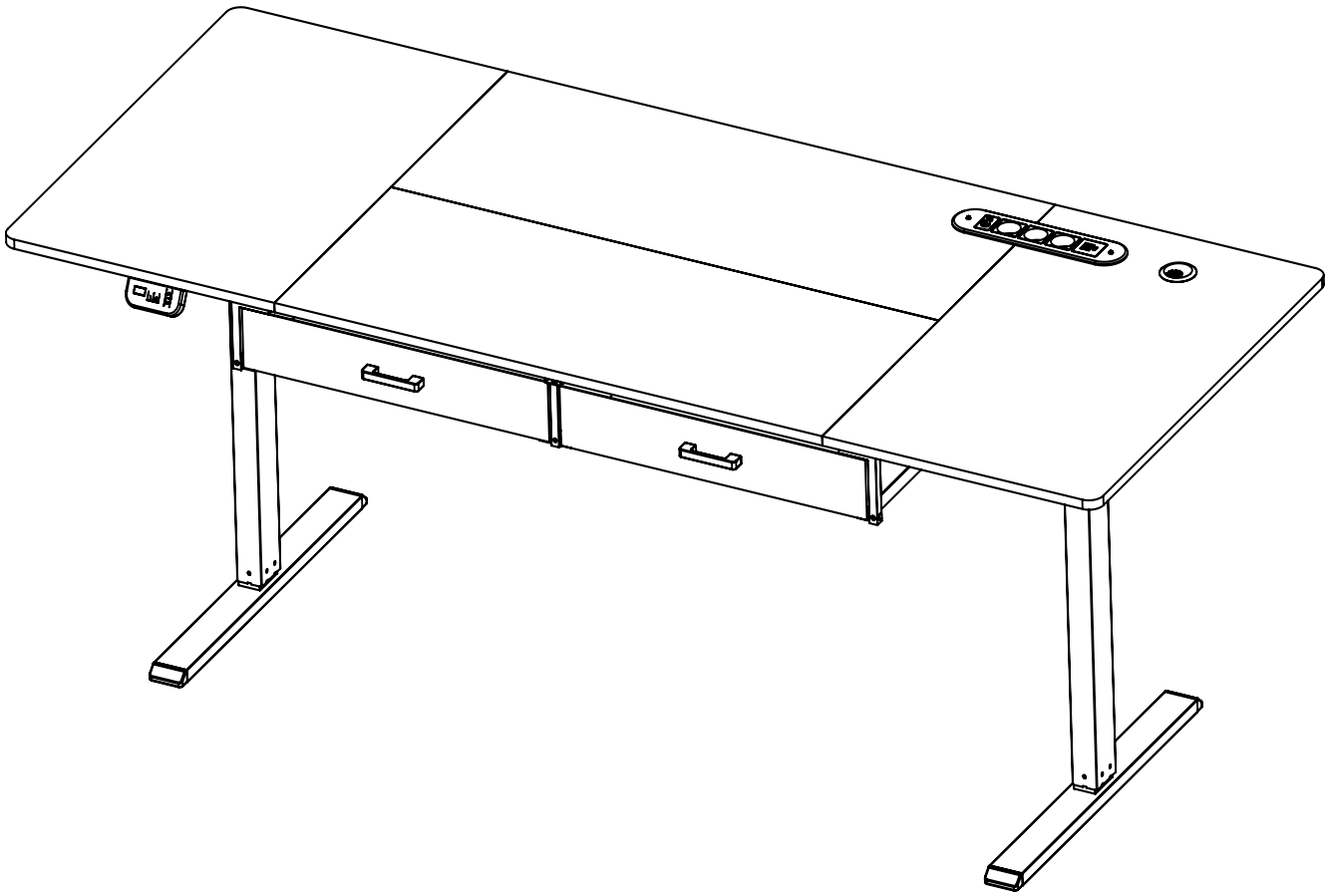

Thank you for your purchase!

Accessories Details Sheet

Item no	Reference Image	Qty
A	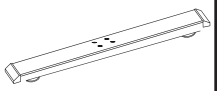	x2
D	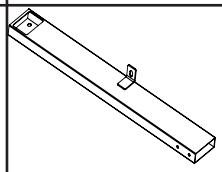	x2
G	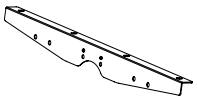	x2
J	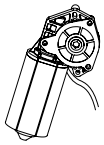	x1
M	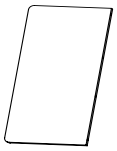	x1
P	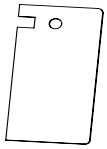	x1
S	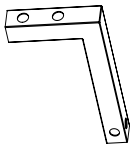	x4
1	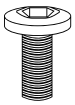 M6*35	x8
4	 ST4*35	x2
7	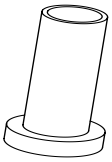	x6
10		x1

Item no	Reference Image	Qty
B	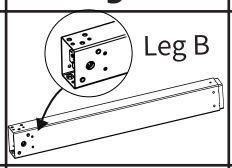	x1
E	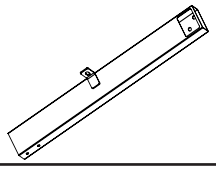	x2
H	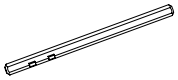	x1
K	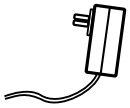	x1
N		x1
Q	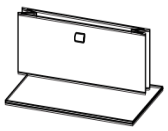	x2
T	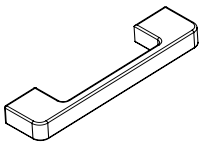	x2
2	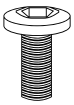 M6*25	x20
5	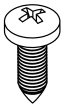 ST4*12	x2
8	 ST4*15	x8
11	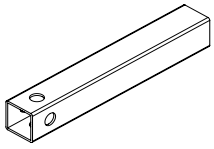	x2

Item no	Reference Image	Qty
C	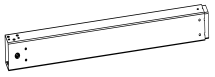	x1
F	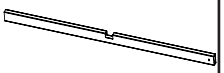	x2
I	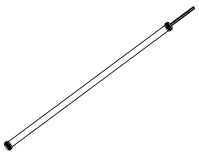	x1
L	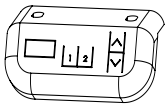	x1
O	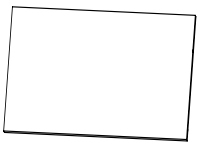	x1
R	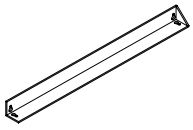	x4
U	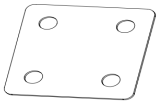	x8
3	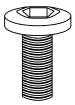 M6*13	x62
6		x12
9	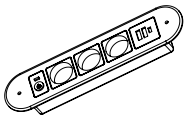	x1
12	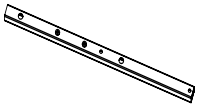	x1

01

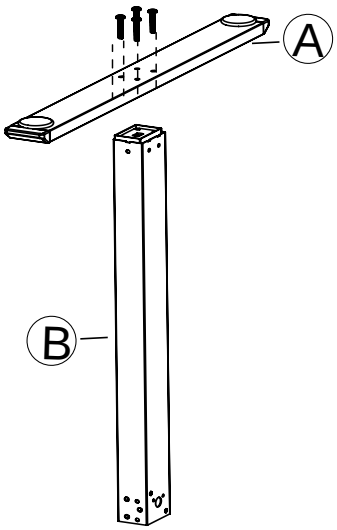

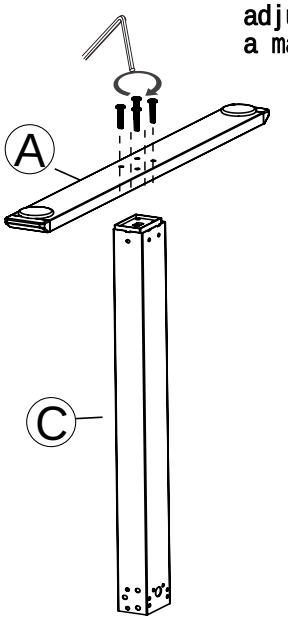

When the ground is not flat, we can adjust to the same height by choosing a mat

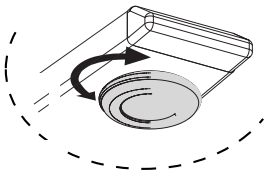

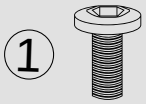

x8

M6*35

02

Insert the hex rod into the slot hole of the motor in the direction of the arrow

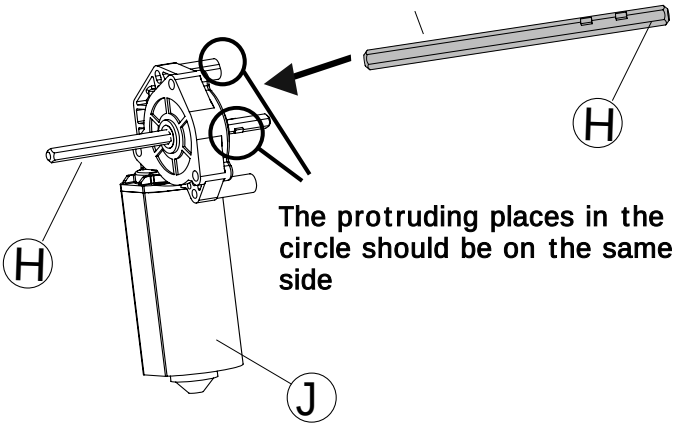

The protruding places in the circle should be on the same side

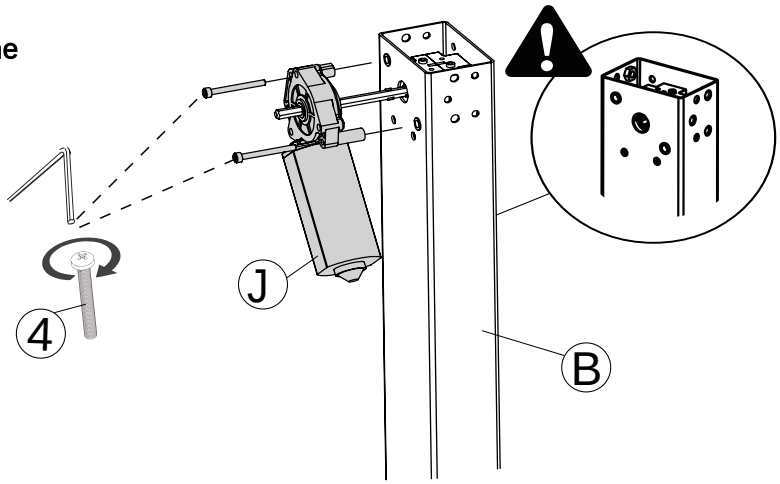

Then insert the convex end motor on leg B together with the motor.Tighten the motor to the B leg with the screws which are shown in the image

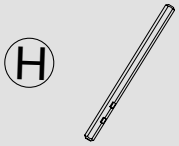

x1



x2

ST4*35

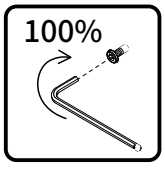

03

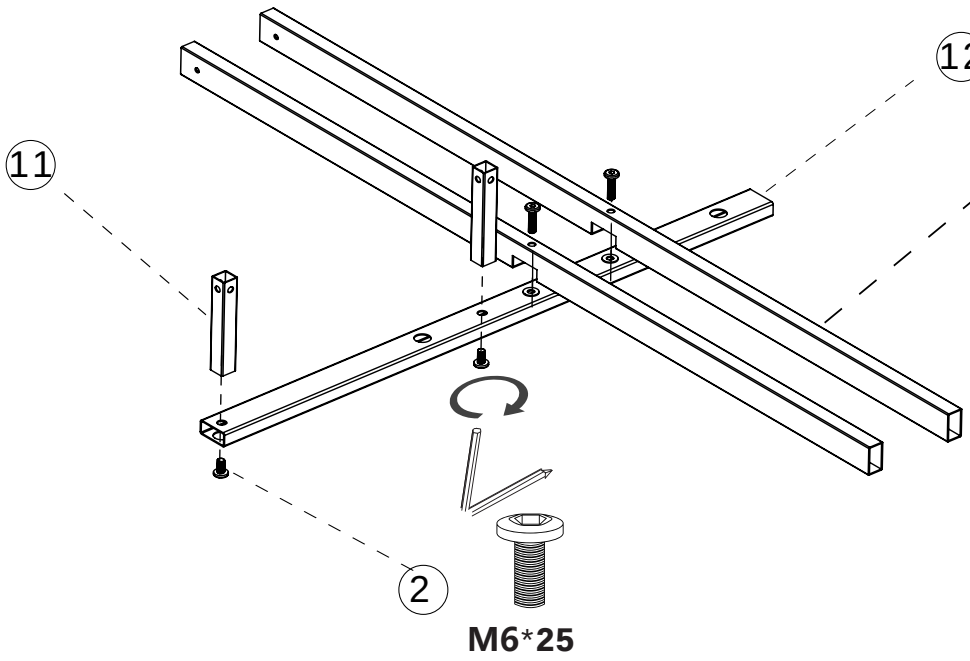

2 x4
M6*25

04

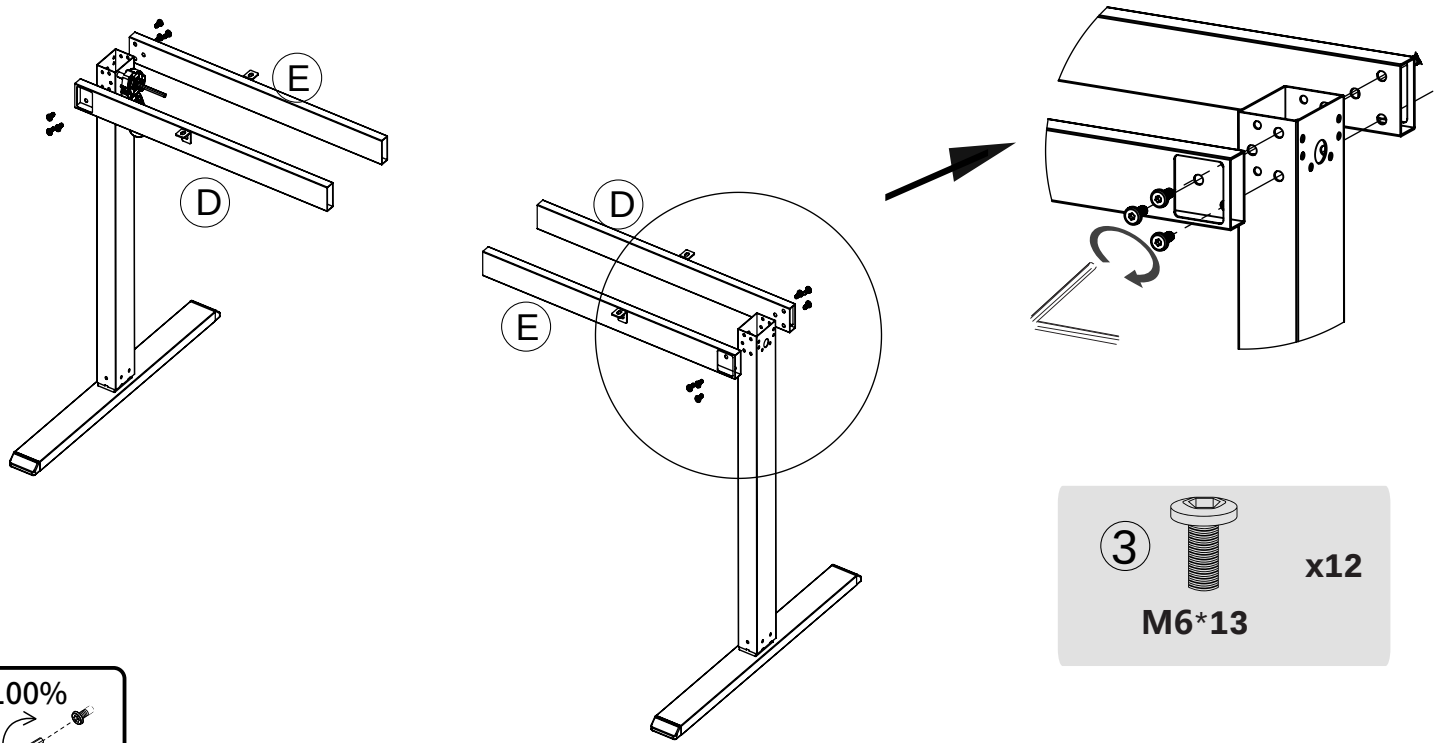

3 x12
M6*13

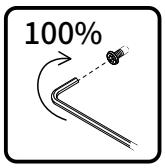

05

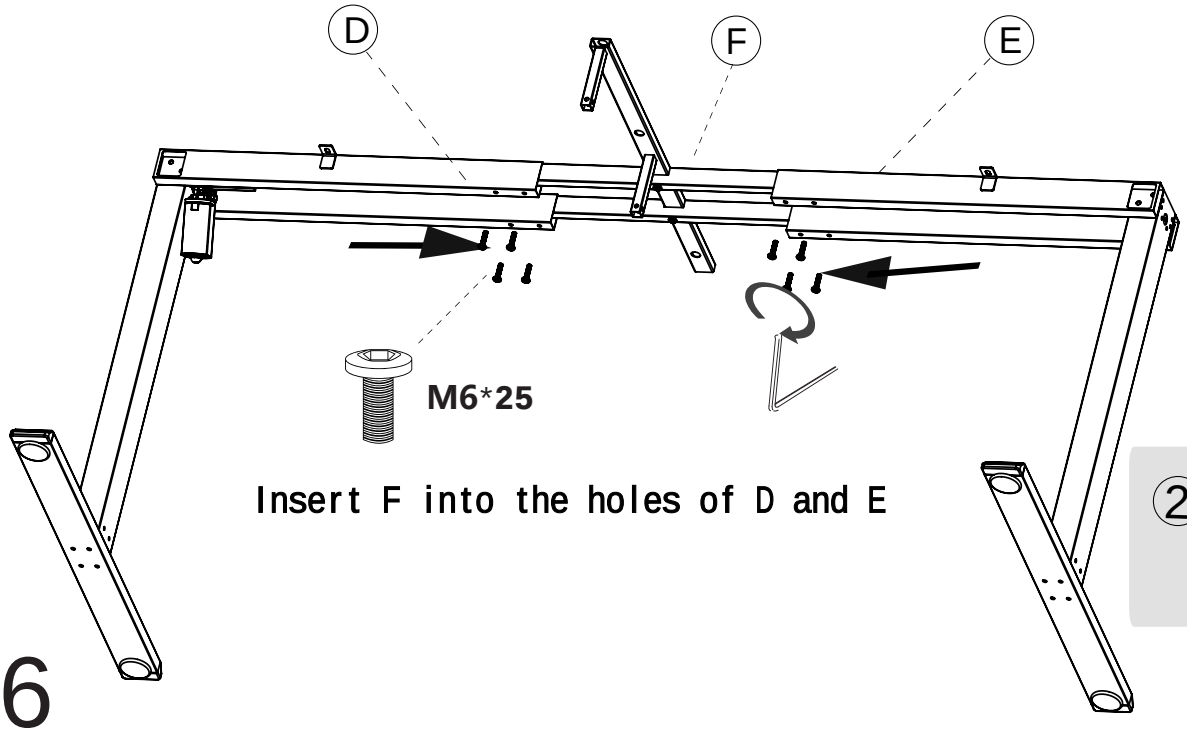

Insert F into the holes of D and E

2 x8
M6*25

06

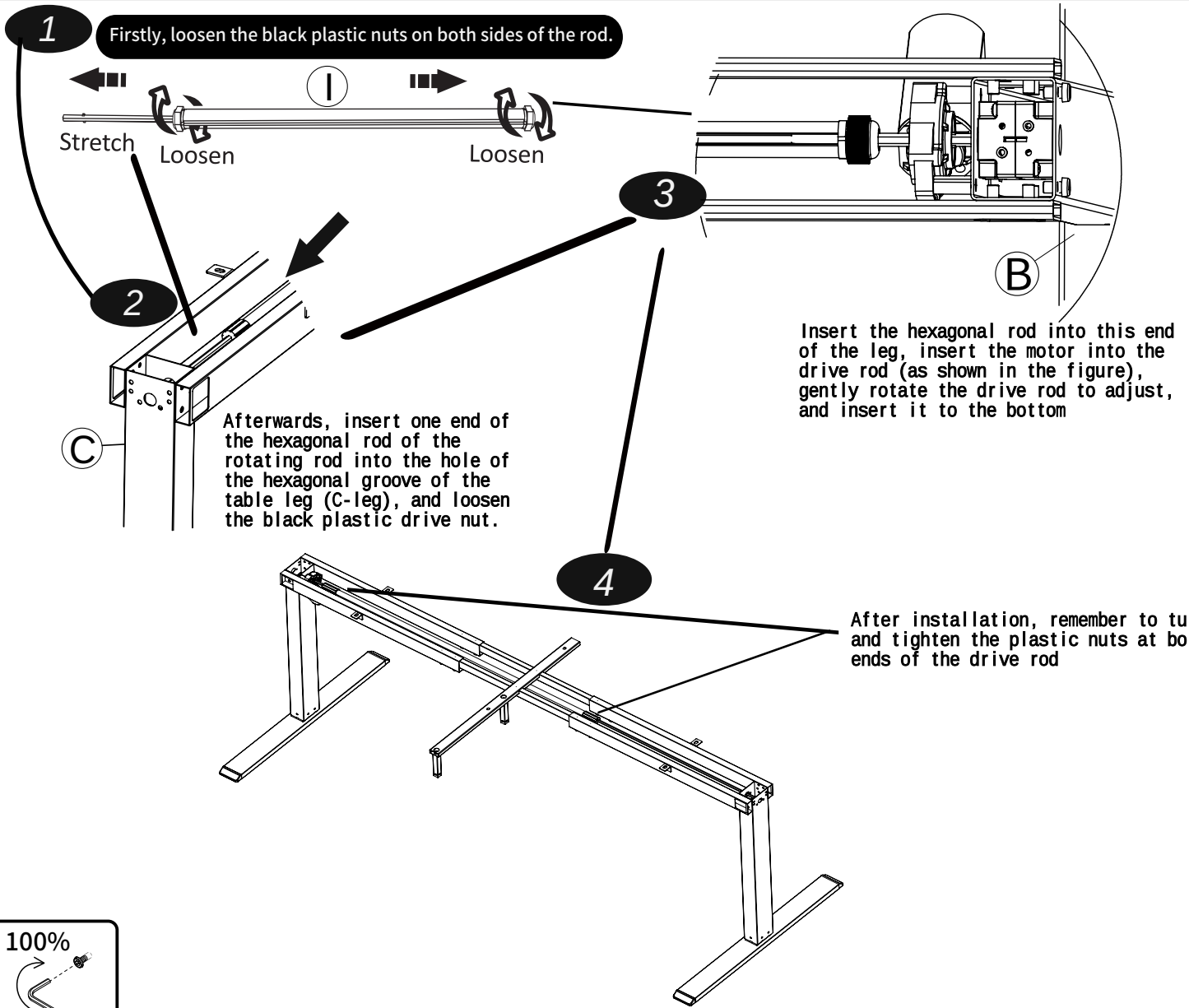

07

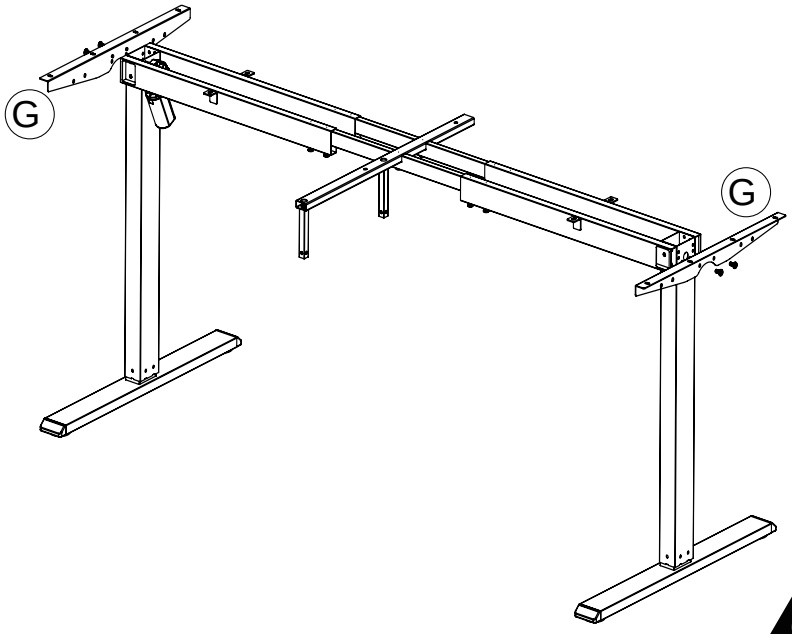

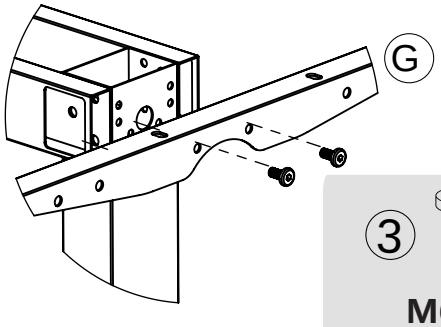

3 x4
M6*13

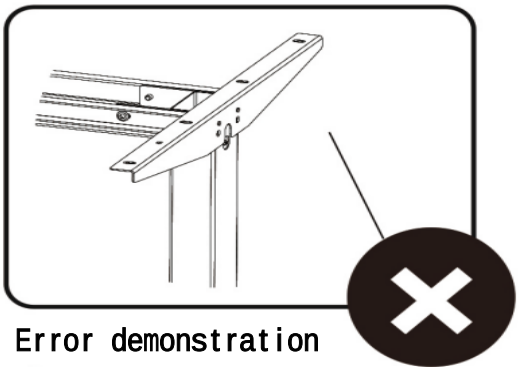

Error demonstration

08

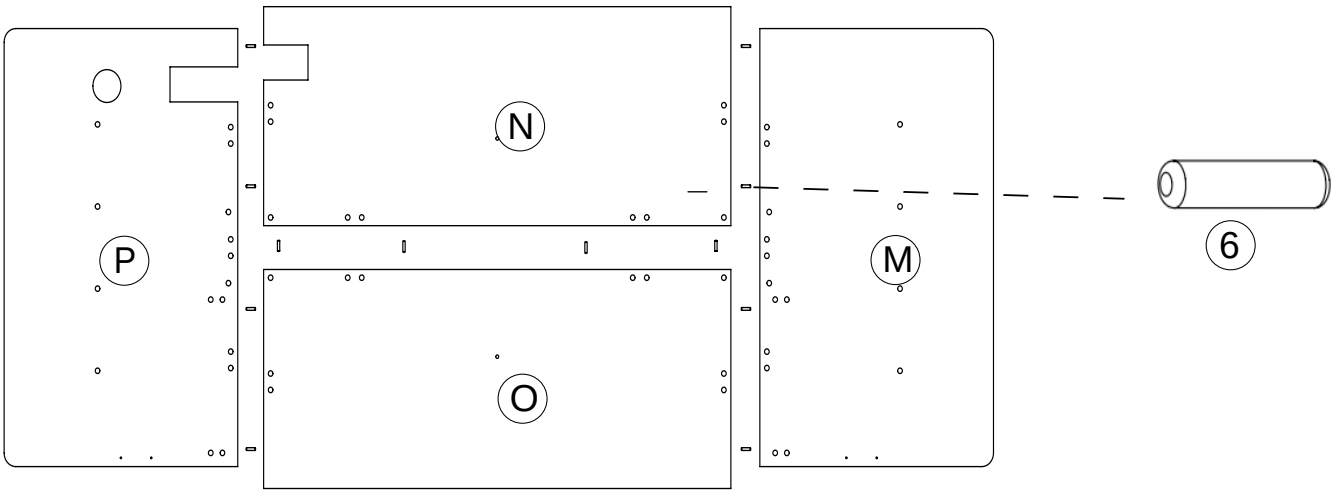

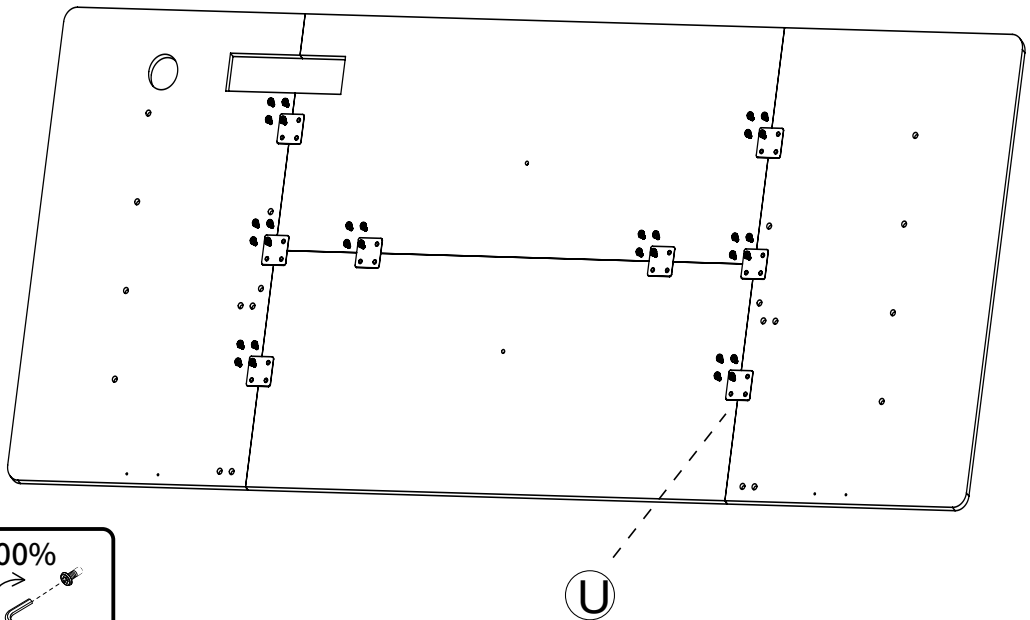

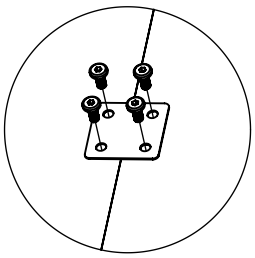

3 x32
M6*13

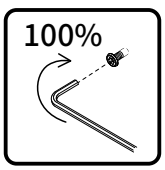

09

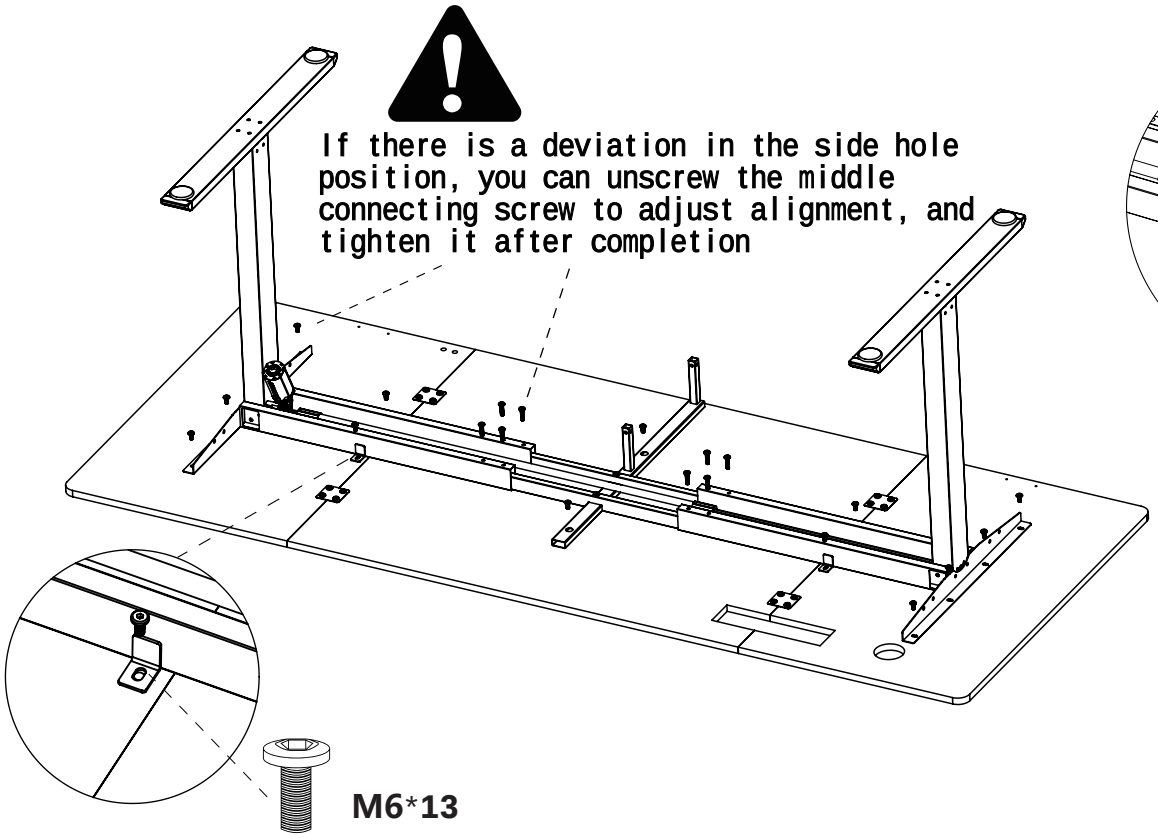

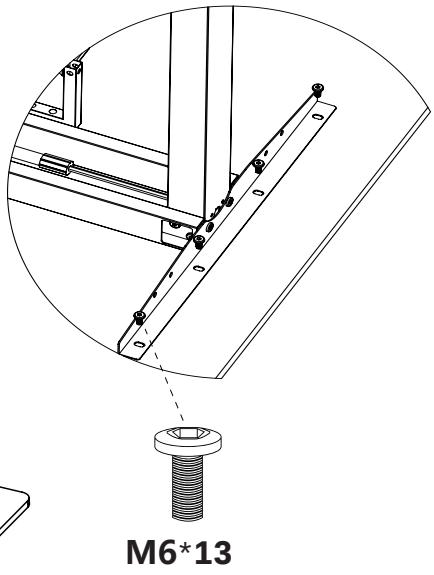

③ x14
M6*13

10

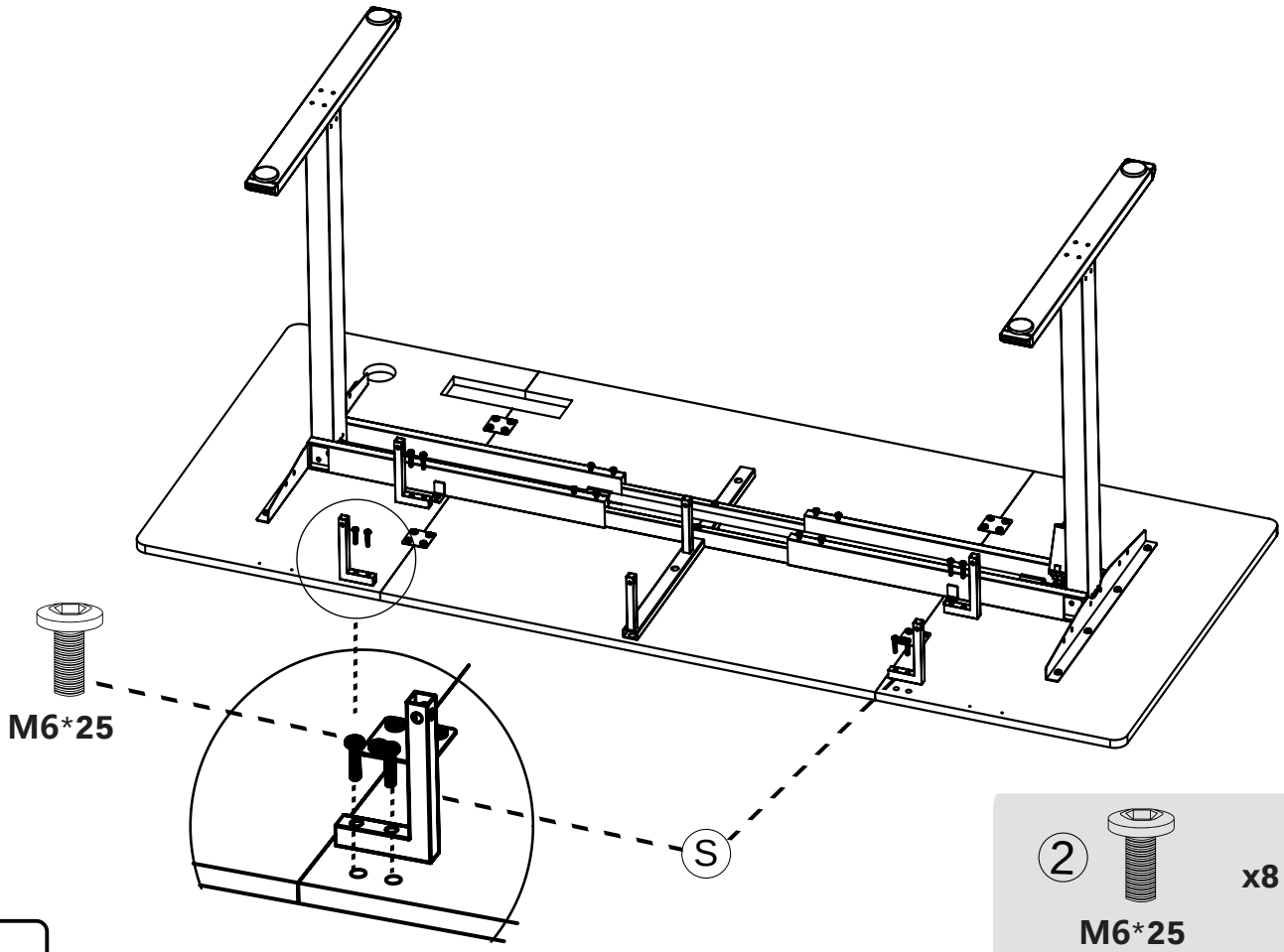

② x8
M6*25

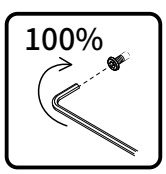

11

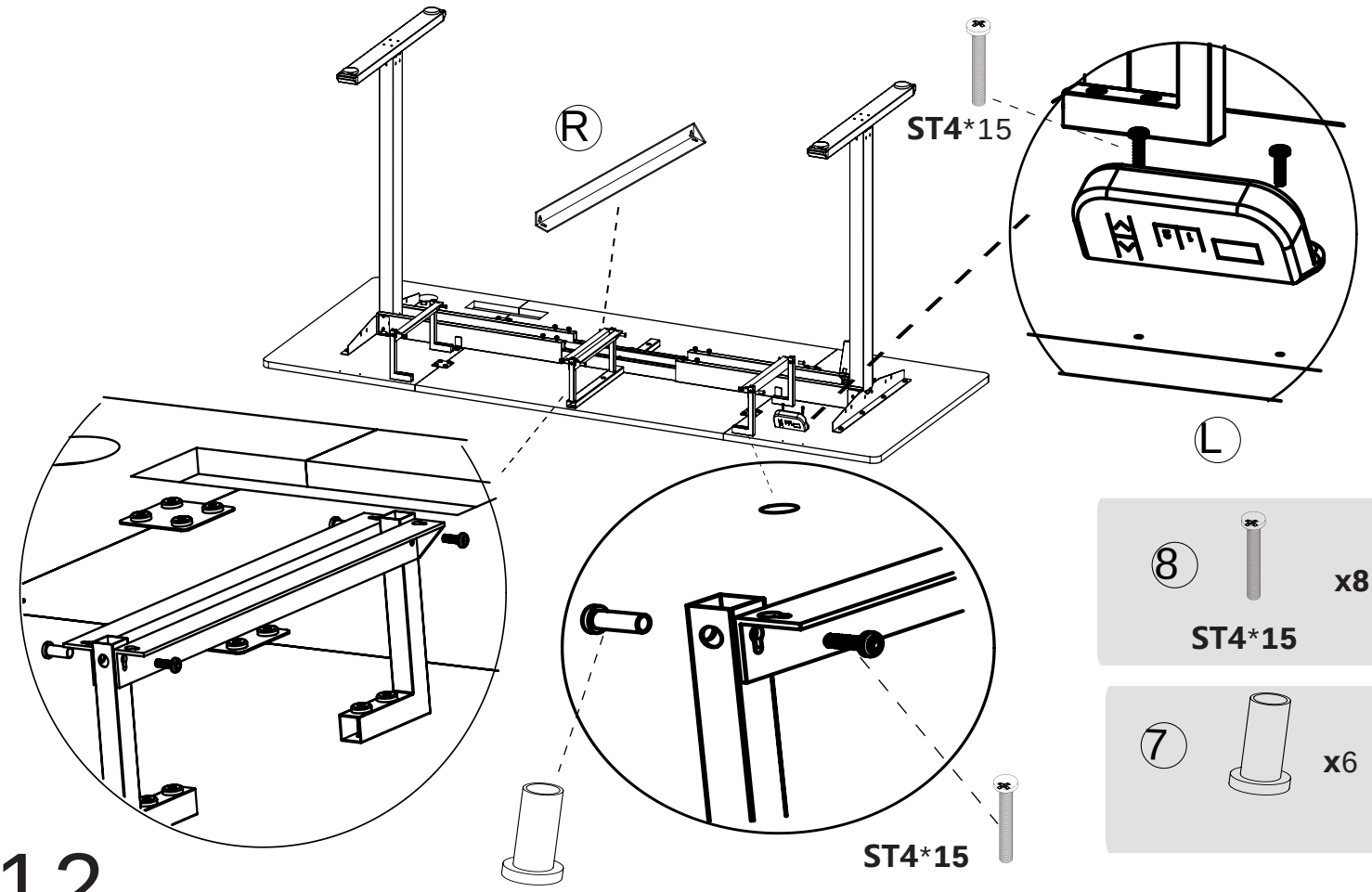

8 x8
ST4*15

7 x6

12

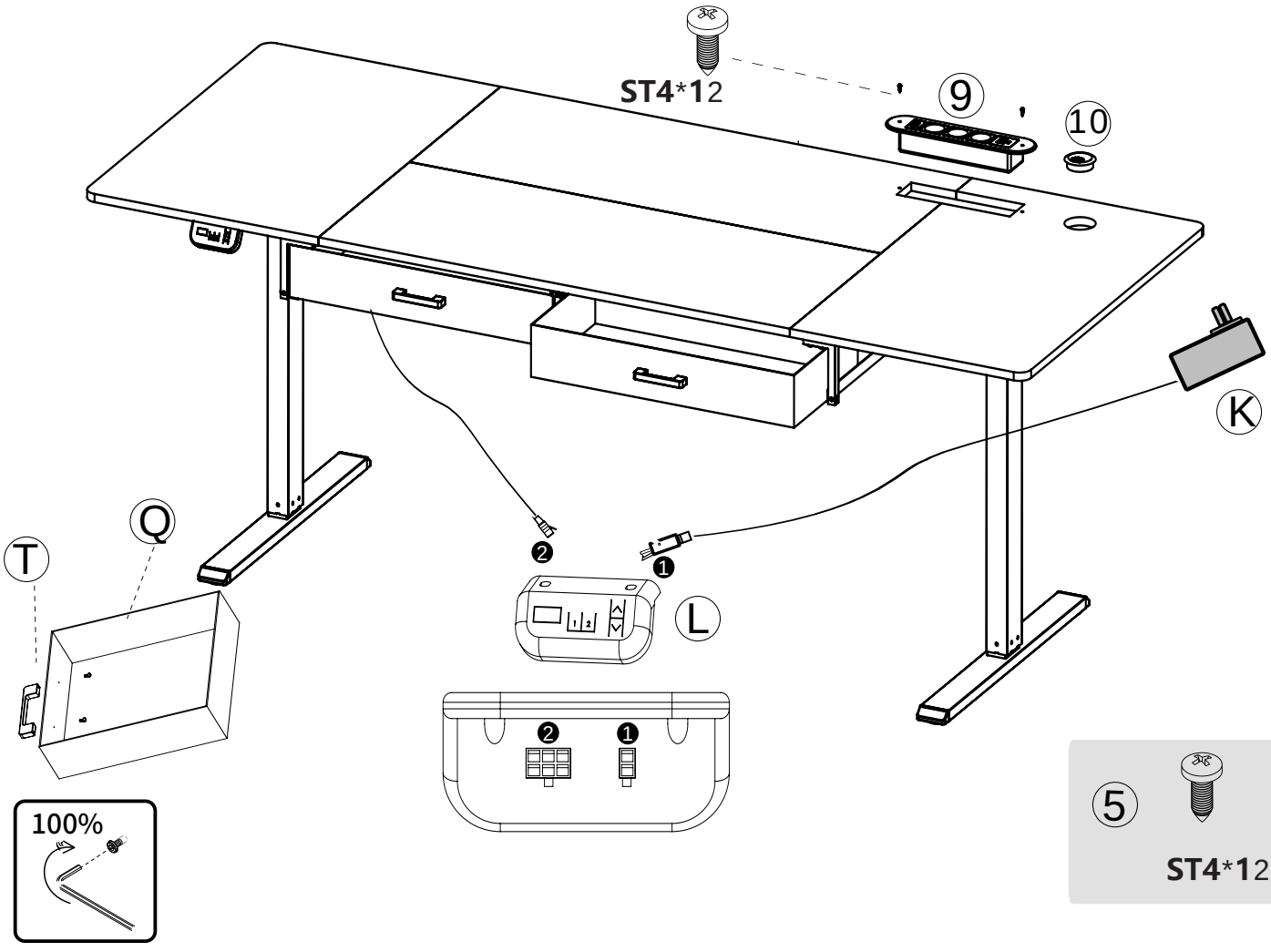

5 x2
ST4*12

Height Adjustment Controller Operation

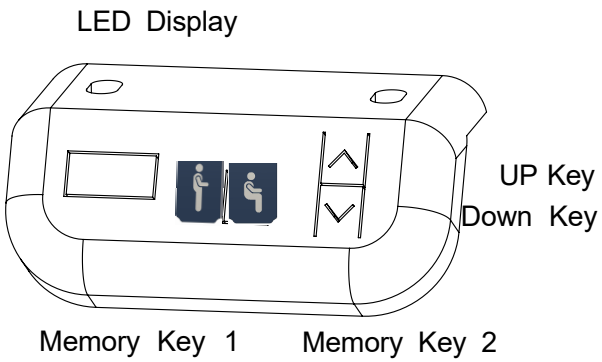

·LED Display:
Press any key once to wake up the LED display.

·UP Key:
Press and hold the UP key to raise the desk.

·Down Key
Press and hold the DOWN key to lower the desk.

●Memory Key:

You must complete the Initialization Process to reset your desk before using it for the first time.

When the display shows "E-1"or "RST",it means that a reset operation is in progress,please continue to press and hold the descending key "V"key as required by the instruction manual until the minimum height value appears,and then release the button

Set memory height
When the operation stops, press and hold the or button to maintain the current memory height

Error Code Instructions

Error Code	Reason	Solution
ER1	Motor malfunction or Hall signal malfunction	1. Power off and check if the motor circuit plug is correctly inserted into the control box interface; 2. Power off and check if the motor circuit and Hall circuit are intact; 3.After troubleshooting, simply plug in the power again and eliminate the fault code to resume operation;
Hot	Motor overheating	At this point, any button operation is ineffective. When the motor returns to normal operating temperature, the digital display on the manual controller shows the current height.
Rst	System requires reset	The reset must be run downwards, and only the down arrow is valid. At this time, long press the down arrow to keep the desktop running downwards until it reaches the lowest position, and then go back 5 millimeters. The digital display shows the actual height. The reset is successful and the operation is restored.

If you have any product defects or unclear problems, please contact us by e-mail. We will reply to you within 24 hours in principle. (Saturday rest day Except for holidays). We will help you to solve the issue ASAP.