Installation Manual

Tools

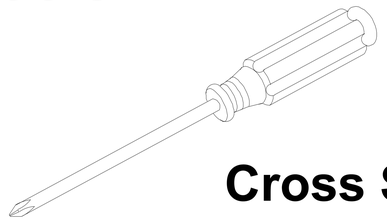

Cross Screwdriver

During Installation

1. Do not discard packing material until assembly is complete, as small parts may loosen inside the carton during shipping. If there is a missing part, please contact our after-sales team at jerry@rupatdecor.com

2. Please assemble this item on soft surfaces such as carpets to protect the finish.

3. Pay attention to stability when assembling to avoid falling or scratching.

4. Fully tighten all screws when all parts are in place.

Cleaning and Maintenance

1. To protect the finish, avoid chemicals and household cleaners.

2. Keep away from the heat source to prolong the service life.

3. Wipe up any spilled liquid on top with a damp cloth.

Components

screw(A x48)

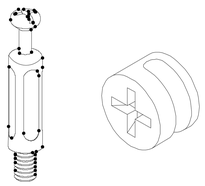

Wooden tenon (B x37)

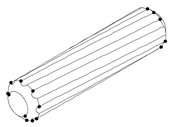

Hinge (C x4)

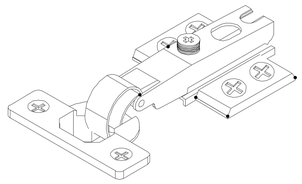

Guide rail (D x4)

Self tapping screws (E x76)short

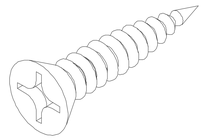

Self tapping screws (E x20)short

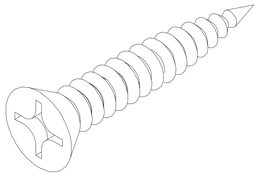

Back plate buckle (Ox4)

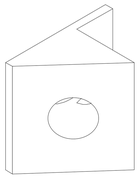

Cup head screws (Hx2)long

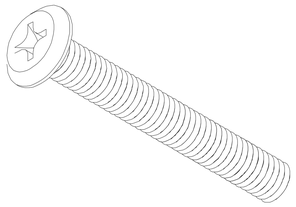

Full tooth screw (I x2)

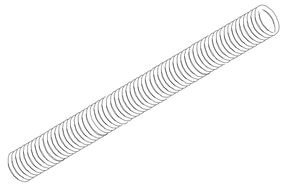

Nut(J x2)

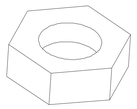

Semilunar tooth (K x2)

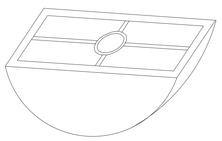

Handle(L x1)

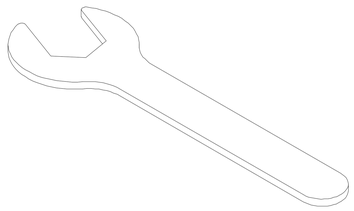

Pads(M x4)

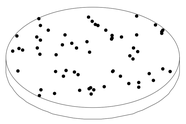

Cup head screws (Nx2)Middle

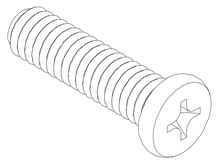

White studs （Qx12）

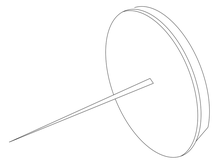

Brown plastic cap (P x2)

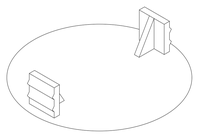

Note: Do not fully tighten all bolts until all parts are in place Failure to follow these instructions may cause the bolt to misalign during assembly.

Screw (A) installation demonstration

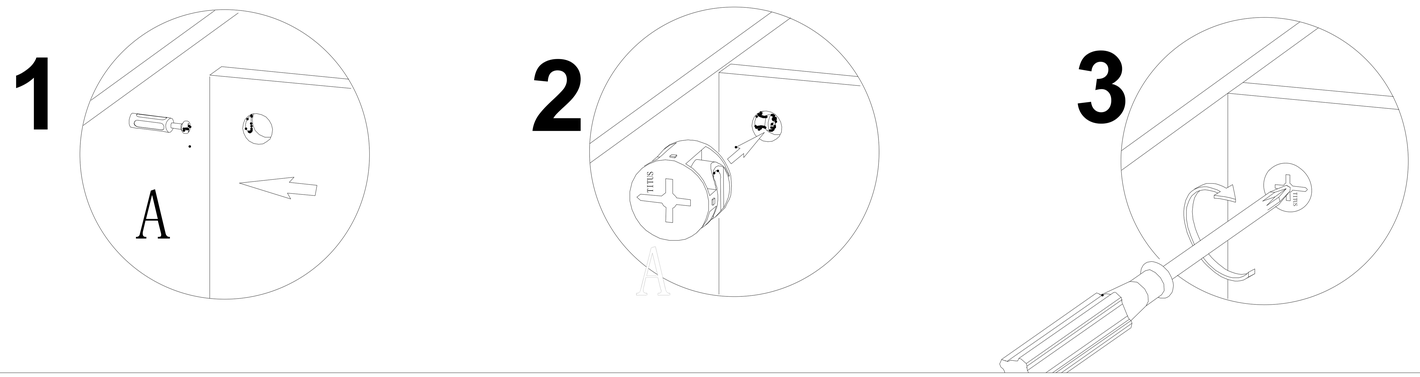

Board

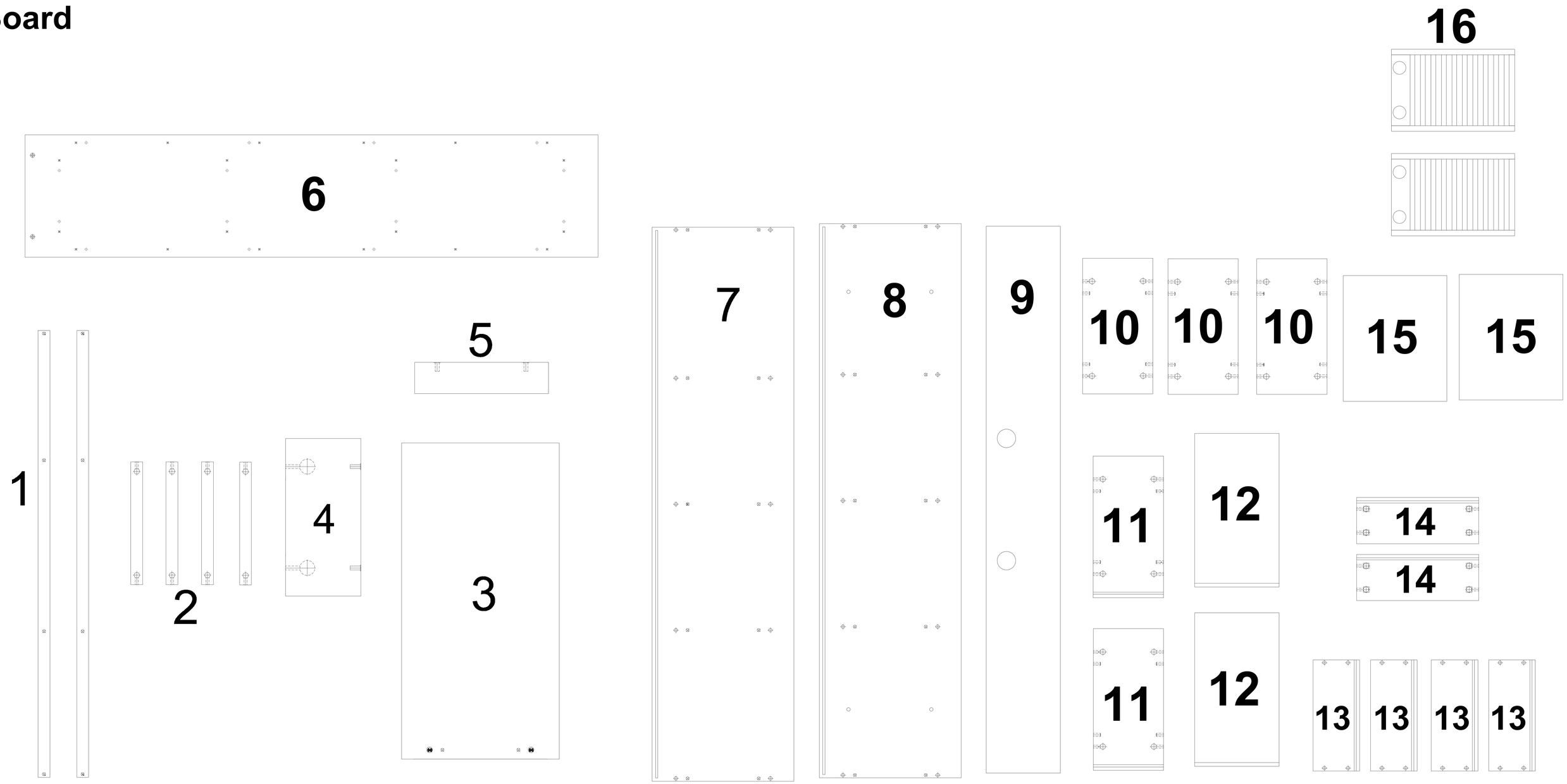

Installation Guide

Step 1

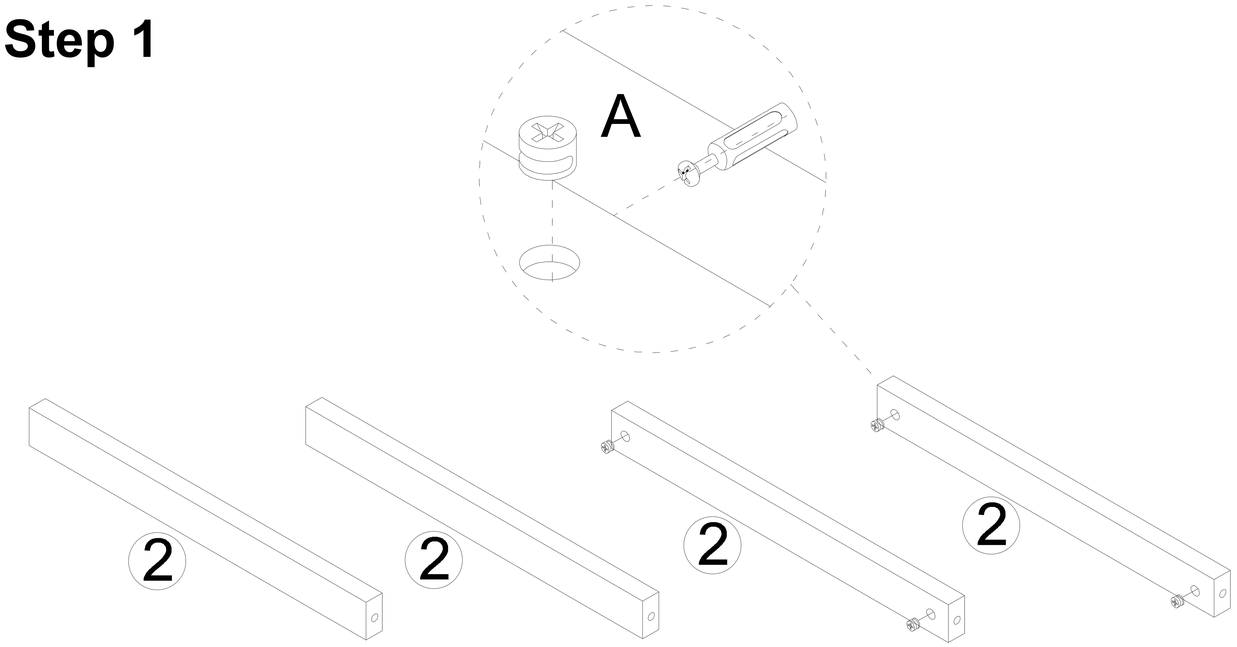

Assembly of three 3# boards. Connect two 2# boards on both sides for the first one with Triple Connectors (A), and connect one 2# board on one side for the other two.

Step 2

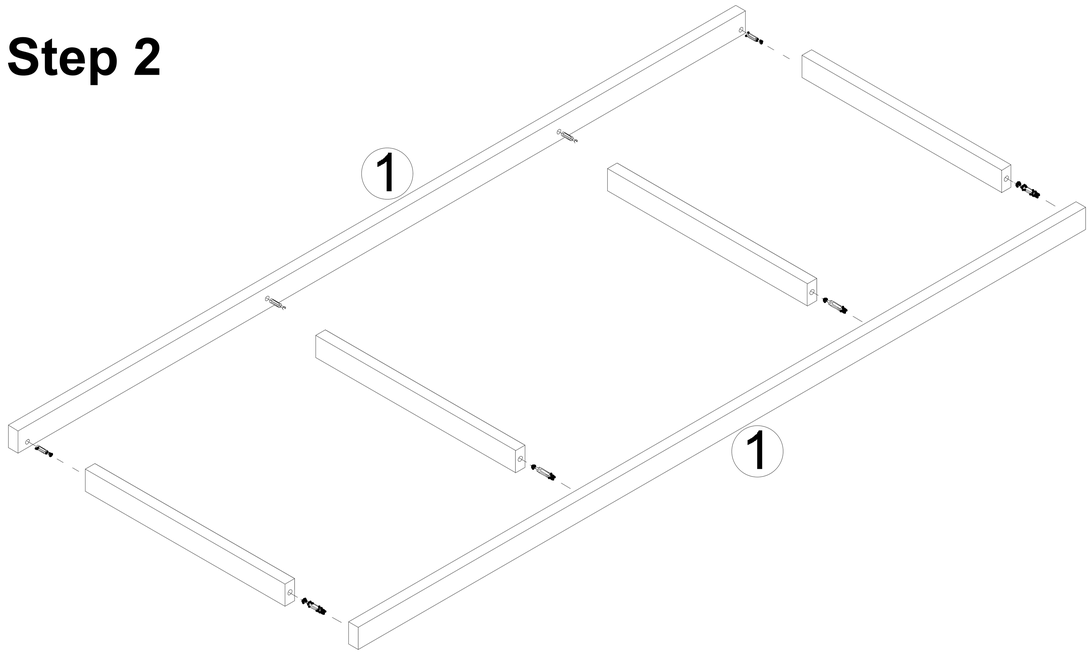

Use Triple Connectors (A) and Wooden Tenon (B) to connect the 1# boards with the three workpieces of Step 1.
***Note that there is a drilled hole under each triple connector, but the wooden tenon is not.**

Step 3

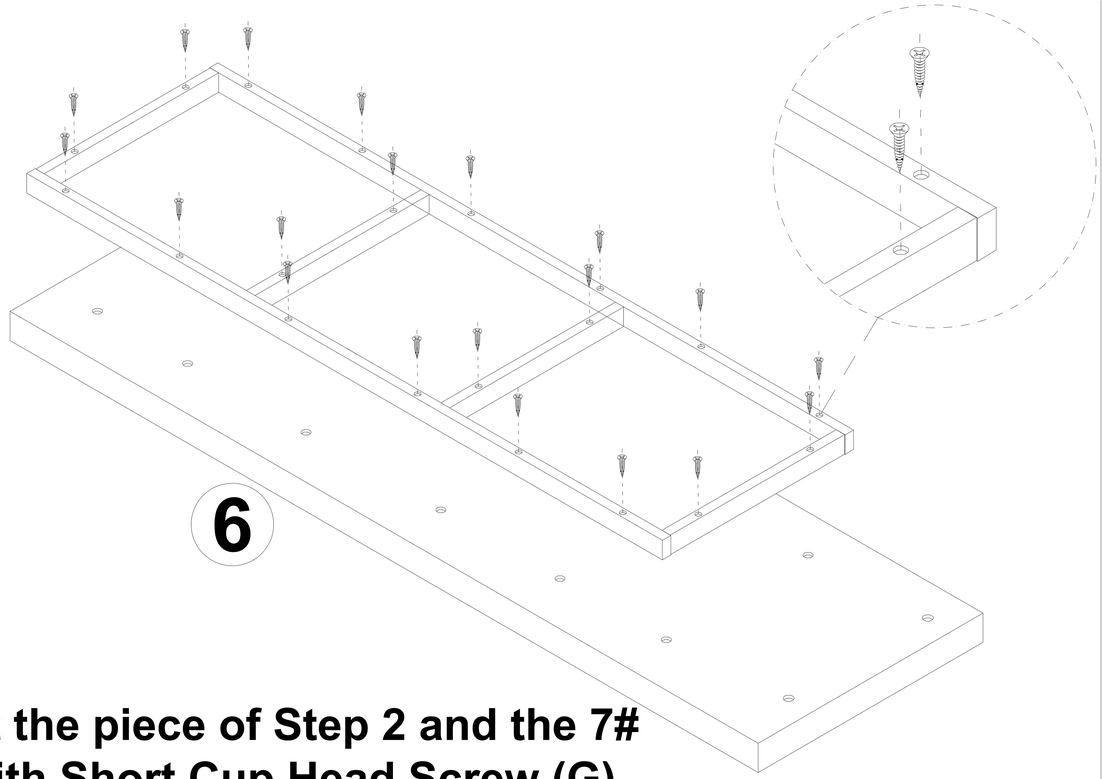

Connect the piece of Step 2 and the 7# board with Short Cup Head Screw (G).
Now you've done the base of the TV stand.

Step 4

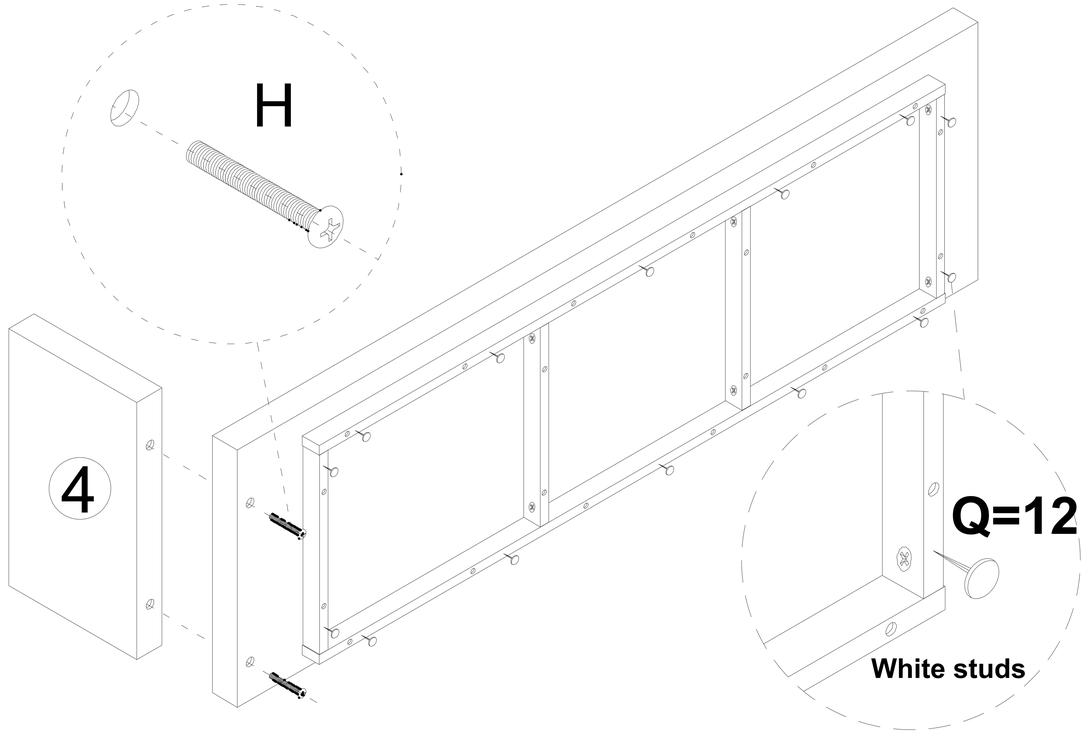

Screw the 4# board to the base of Step 3 with Long Cup Head Screw (H) as shown..

Installation Guide

Step 5

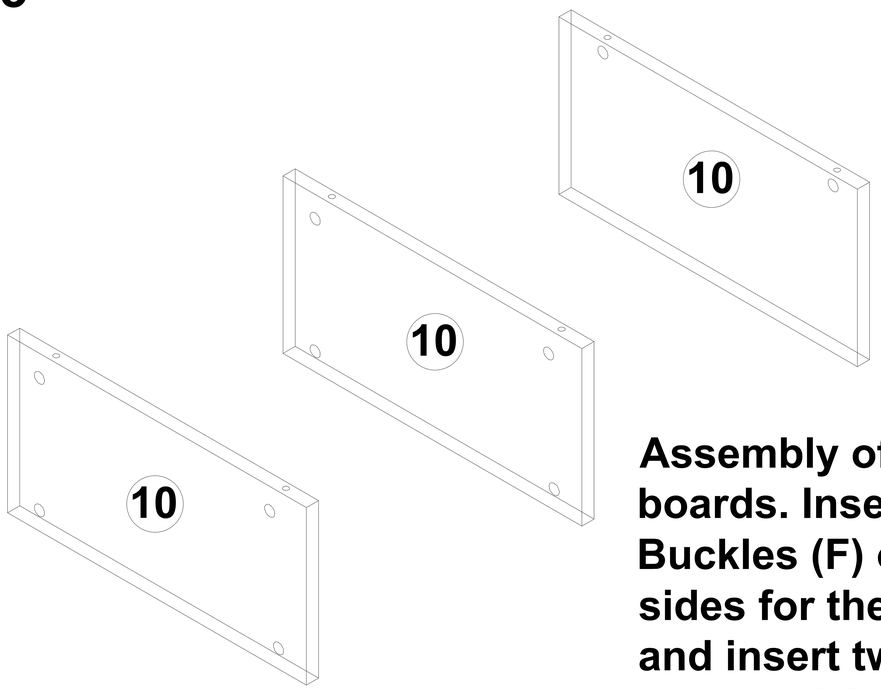

Assembly of three 12# boards. Insert two Plate Buckles (F) on both sides for the first one, and insert two Plate Buckles (F) on one side for the other two.

Step 6

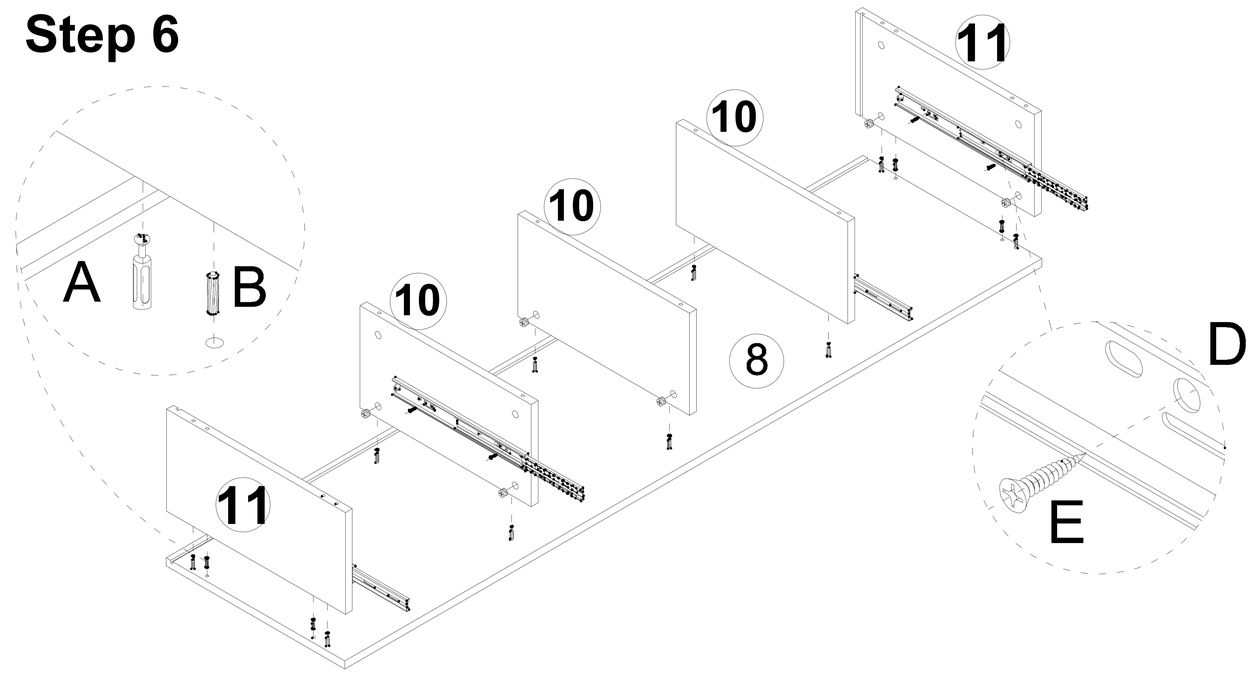

Fix three 12# boards and two 13# boards on the 9# board with Triple Connectors (A) and Wooden Tenon (B). Install the Slide Rails (D) between the 12# and 13# boards with Self Tapping Screws (E).

Step 7

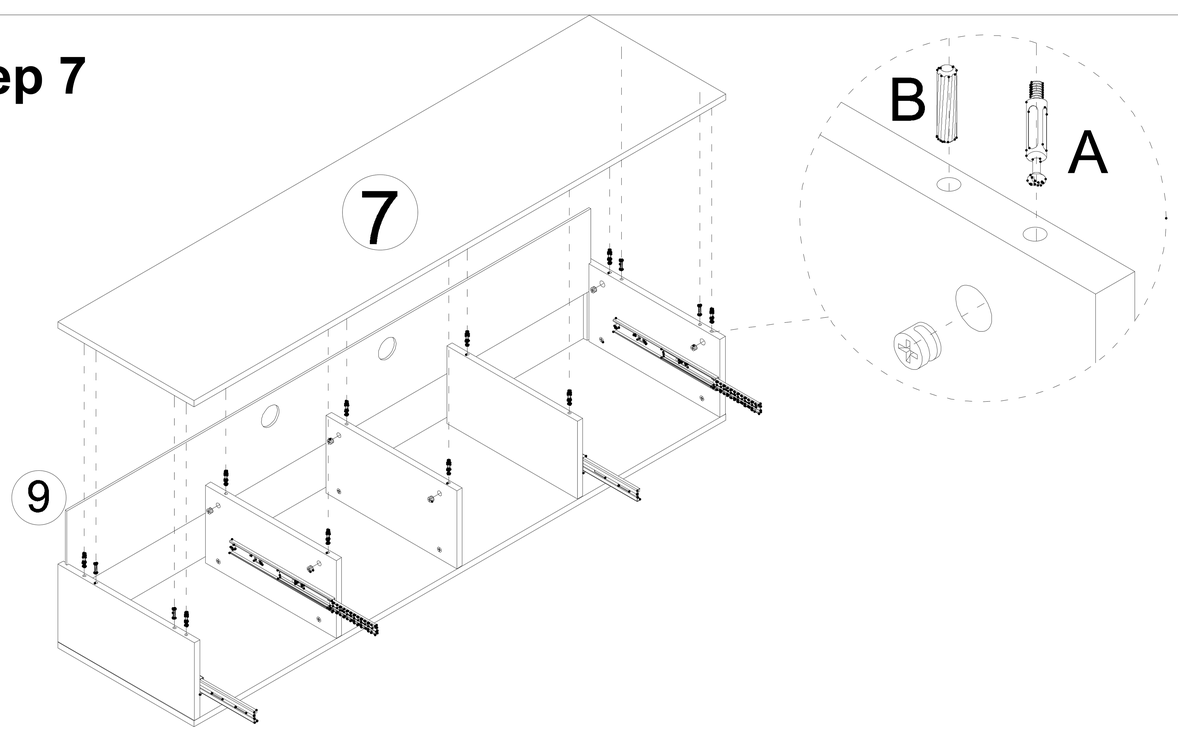

Fix the 8# and 10# board on the workpiece in Step 6 with Triple Connectors (A) and Wooden Tenon (B) as shown. Now you've done the main body of the TV stand.

Step 8

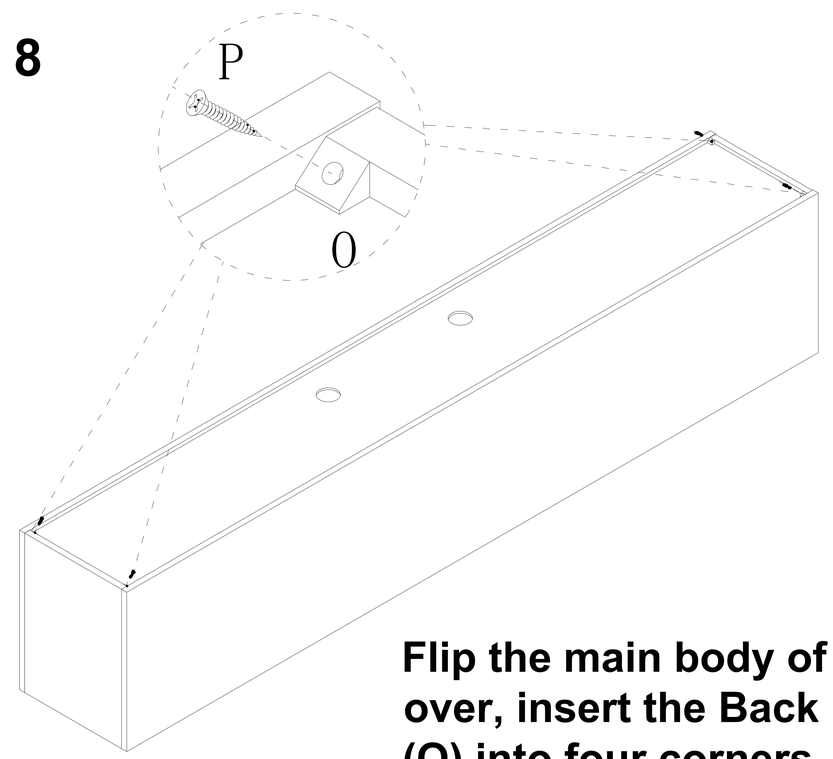

Flip the main body of the TV stand over, insert the Back Panel Buckles (O) into four corners, and fix them with Long Self Tapping Screws (P).

Install according to the part number sequence.

Step 9

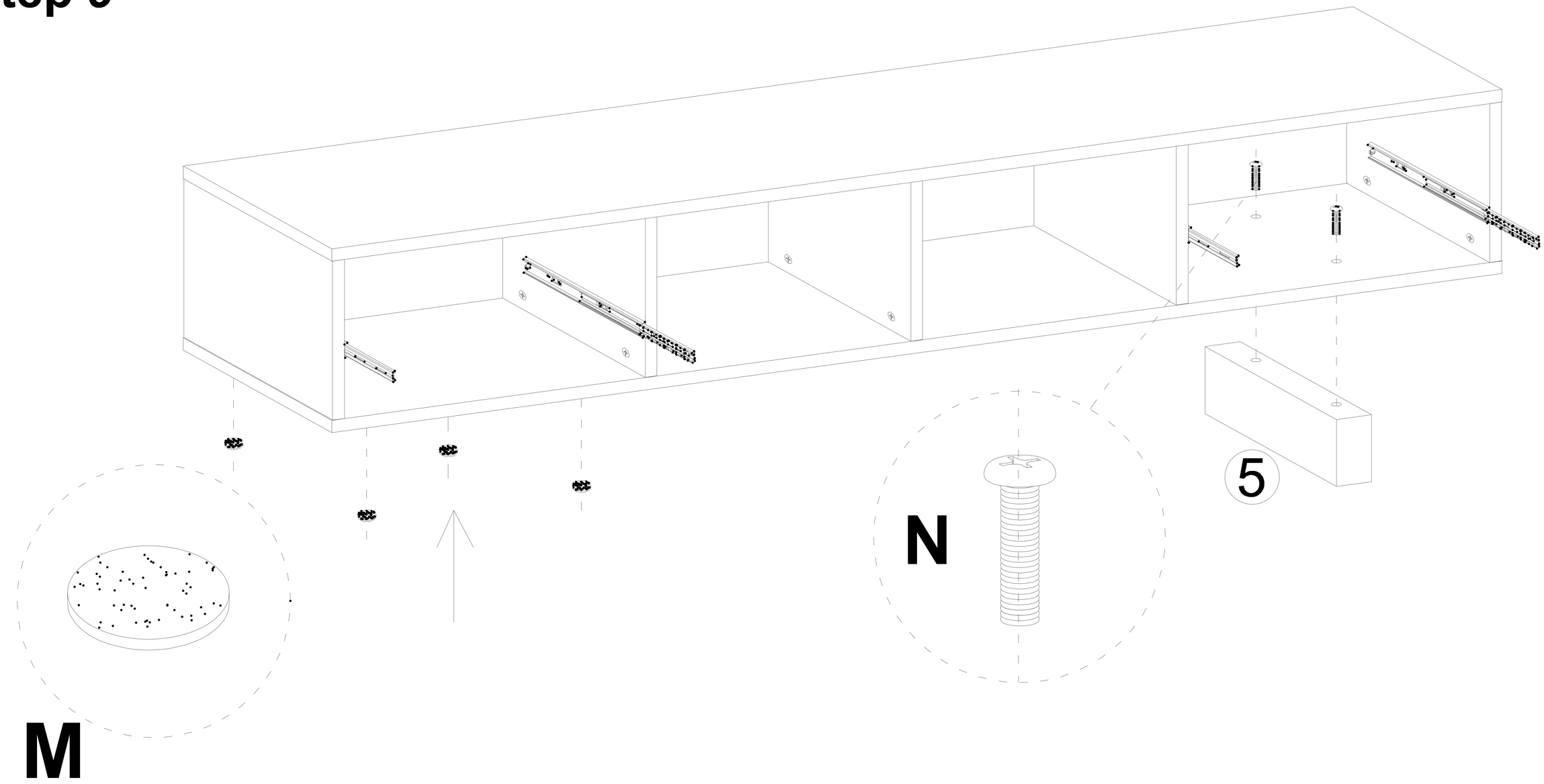

Now you need to choose the placement direction of the TV stand and then fix the 6# board under the main body with Screw (N). Affix the Pads (M) under the other side of the main body.

Step 10

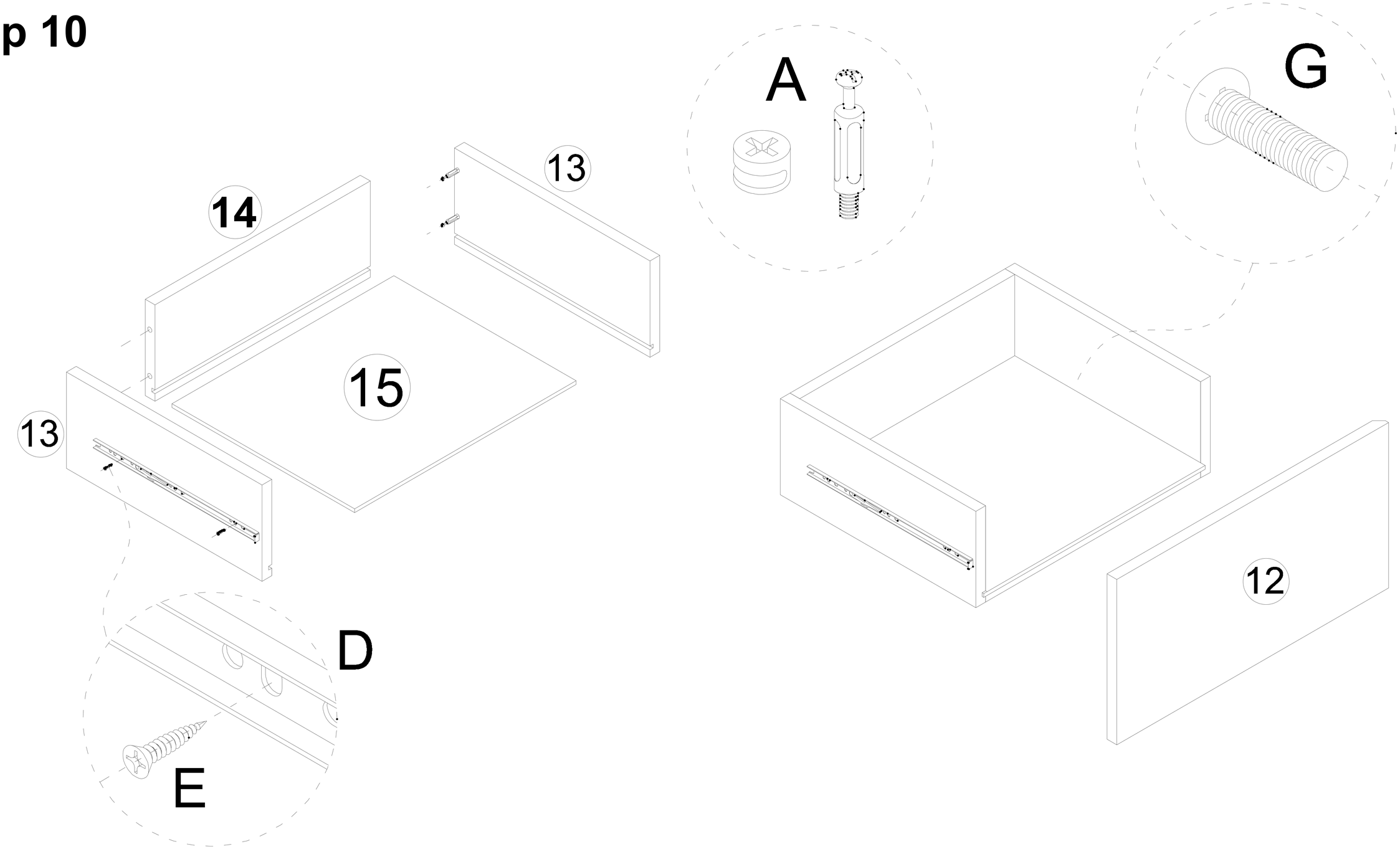

Fix the Slide Rail (D) on the outside of the 15# board with self-tapping screws (E), and connect the 15# board with the 17# board with Connectors (A). Connect the 16# 18# boards with Triple Connectors (A) in the same way. Then fix the 14# board outside the 16# board with Short Cup Head Screws (g). Repeat to get the other drawer.

Install according to the part number sequence.

Step 11

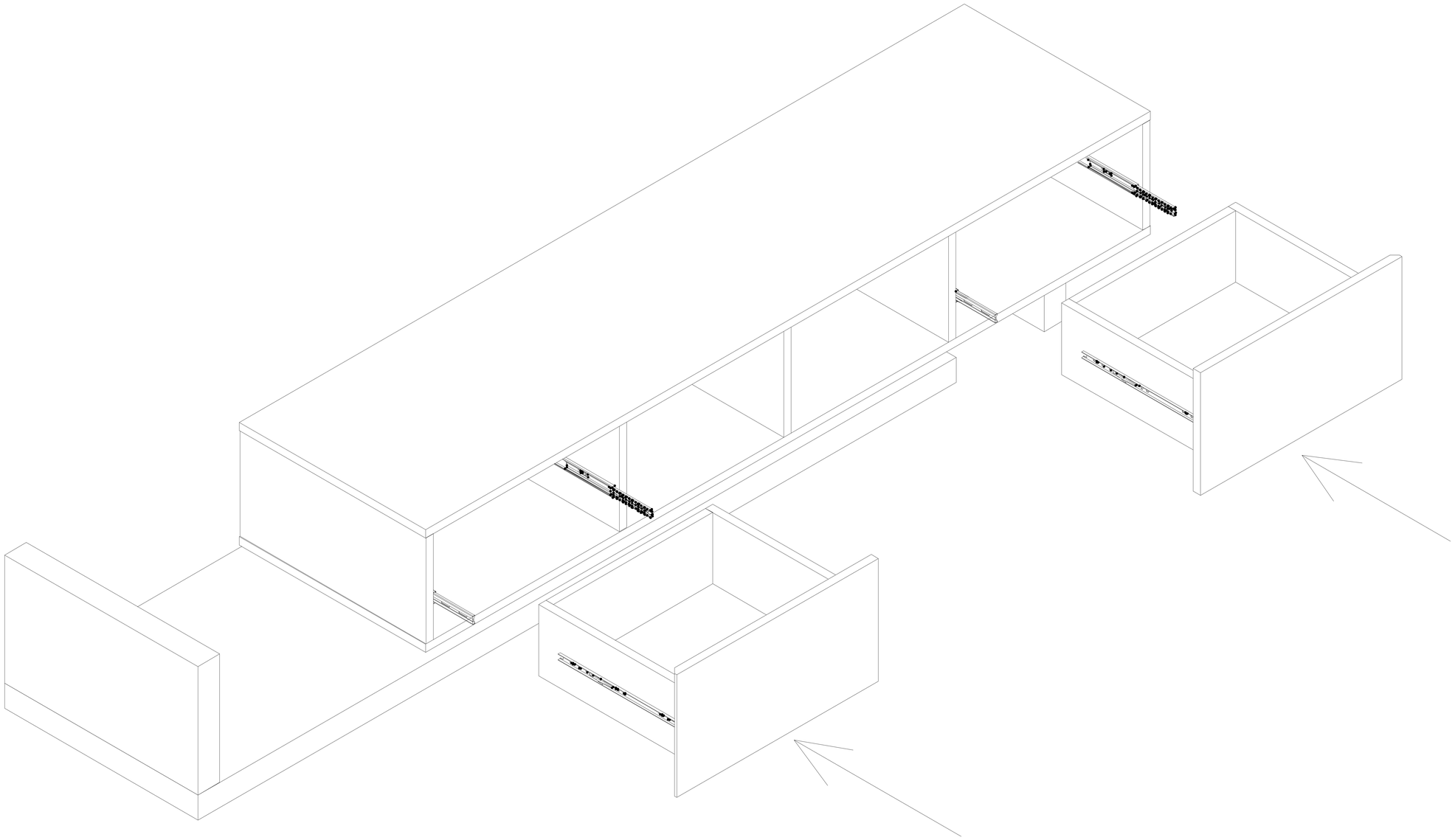

Place the main body on the base. Align the joints between the rails and place the drawers. Then, place two 11# boards as the interlayer as shown.

Step 12

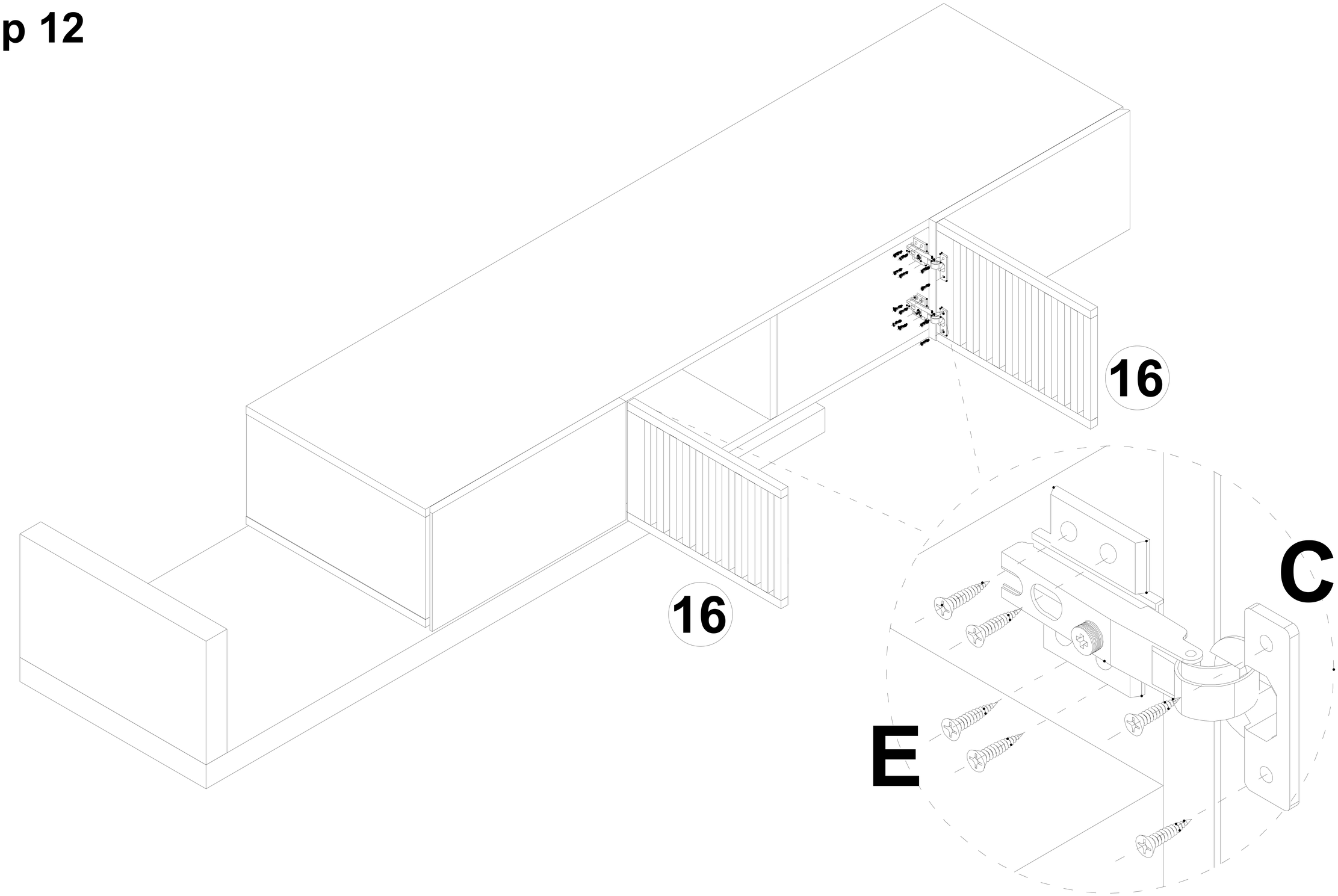

Install the Curved Hinge (C) with Self Tapping Screws (E) between 19# boards and the joints of the layers.

Installation Guide

Step 13

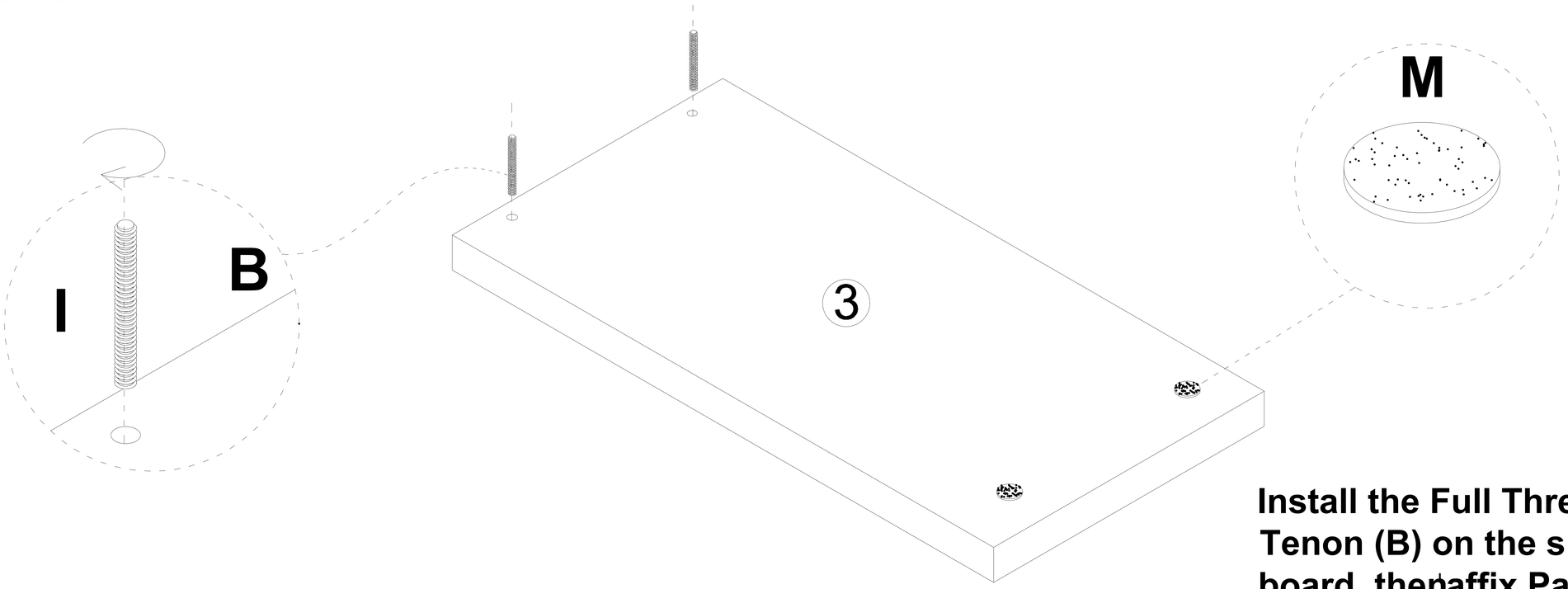

Install the Full Thread Screw (I) and Wooden Tenon (B) on the side of the pre-drilled 4# board, then affix Pads (M) on the other side.

The brown plastic cover can be buckled after installationm (Brown plastic cap)P=2

Step 14

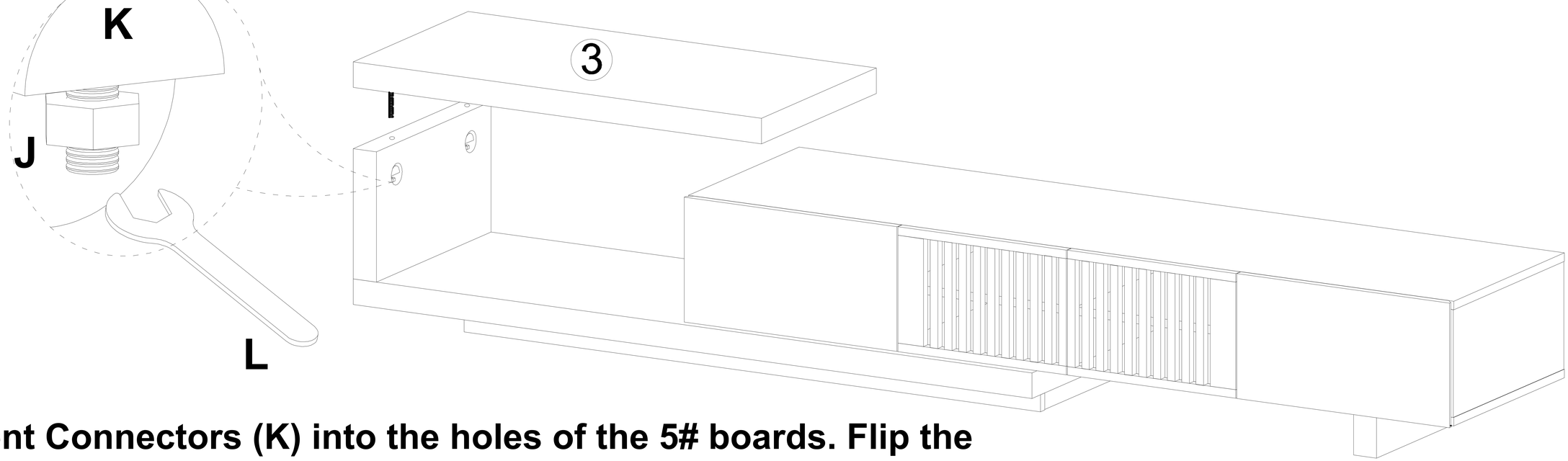

Put the Crescent Connectors (K) into the holes of the 5# boards. Flip the workpiece from Step 12 over, and make sure the Full Thread Screw (I) goes through the Crescent Connectors (K). Tighten the Full Thread Screw (I) with Nut (J) with Wrench (L).