SKU: [PHO 14UMWPTB] [PHO 14UM96Q7]

LOT No.:DX-No.1

Assembly Instruction

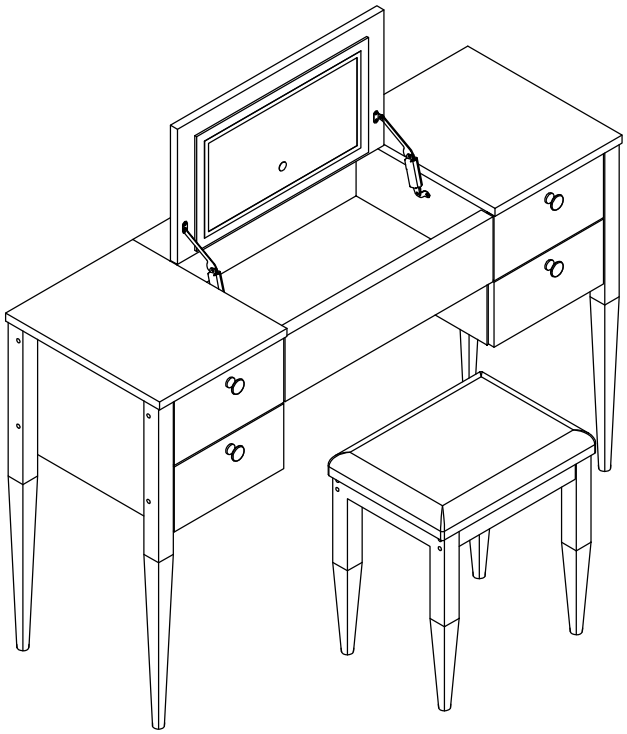

Team Assembly Recommended

Trouble shooting:

Missing / Wrong / Broken parts and installation issues

↓

Send email with your question, pic and order NO. to ***support@idealhouse.vip***

↓

Respond within 24 hours

↓

Issue resolved

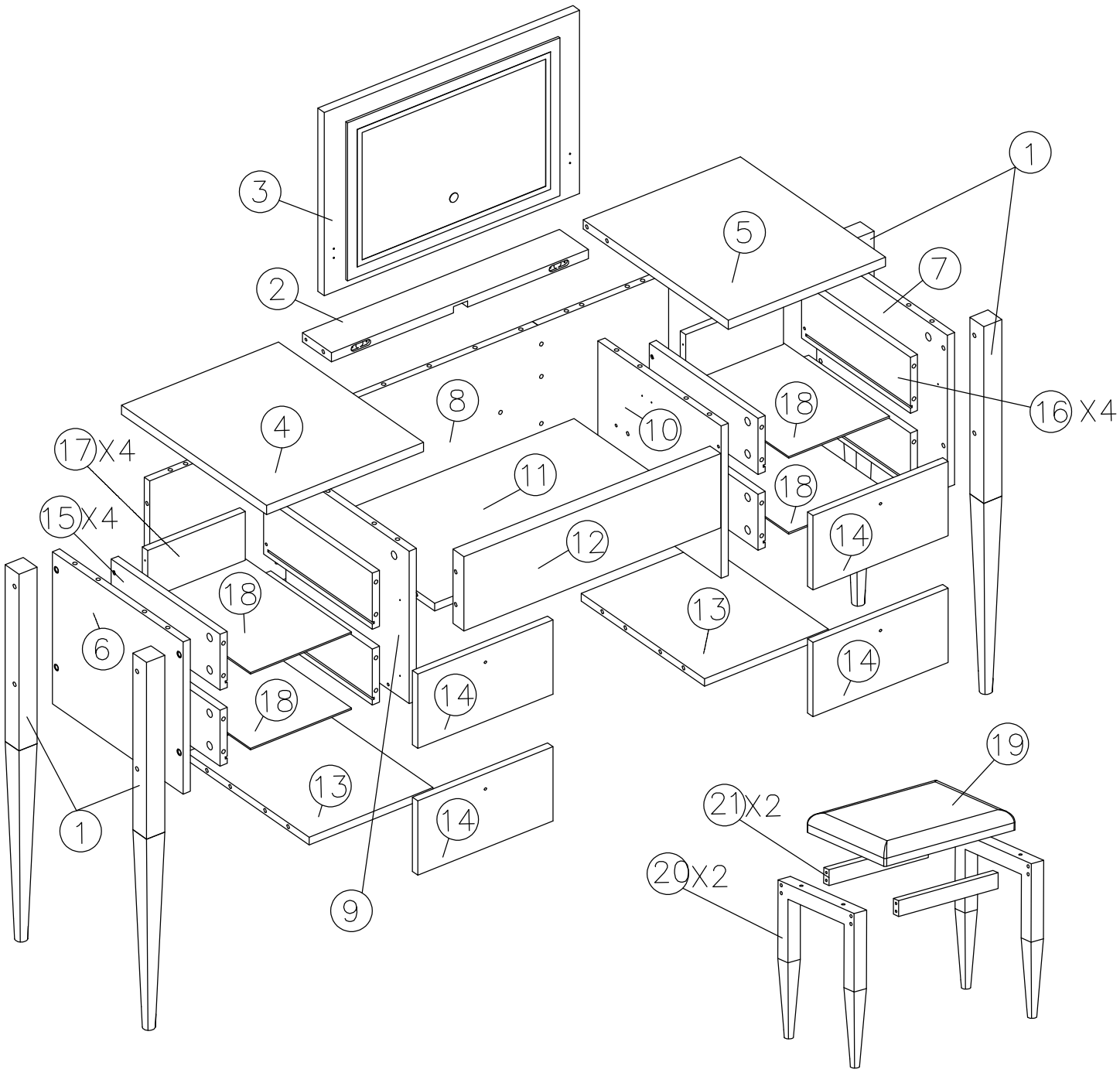

Note:Don't tighten all screws during installation.

Componets

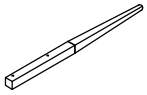	_38*38*732mm_	1	X 4
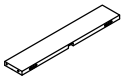	_540*96*18mm_	2	X 1
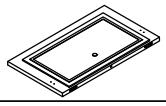	_536*304*22mm_	3	X 1
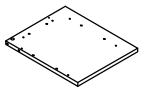	_330*400*18mm_	4	X 1
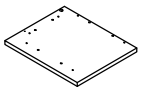	_330*400*18mm_	5	X 1
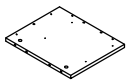	_360*299*15mm_	6	X 1
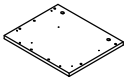	_360*299*15mm_	7	X 1
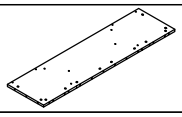	_1090*299*15mm	8	X 1
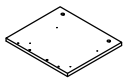	_340*299*15mm_	9	X 1
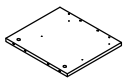	_340*299*15mm_	10	X 1
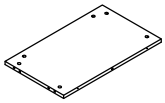	_540*325*15mm_	11	X 1
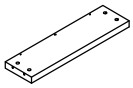	_540*146*30mm_	12	X 1
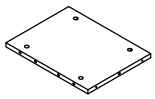	_260*340*15mm_	13	X 2
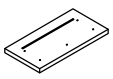	_284*146*15mm_	14	X 4
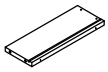	_300*110*15mm_	15	X 4
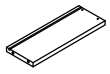	_300*110*15mm_	16	X 4
	_205*110*15mm_	17	X 4
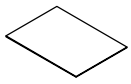	_291.5*212*3mm_	18	X 4

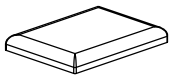	_400*300*50mm_	19	X 1
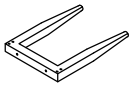	_290*400*38mm_	20	X 2
	_40*20*304mm_	21	X 2

Check all the components & screws before assembl y.
Do not install in case part is missing, contact us to get.
Send email with your question to ***support@idealhouse.vip***.
We will resend within 24 hours.

Screws &Tools

A	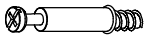	Ø6x35	x 56+2
B		Ø15x12	x 56+2
C		Ø7x40	x 10+2
D	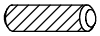	Ø8x30	x 38+2
E	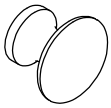		x 4
F	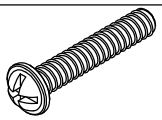	M4x18	x 4+1
G		Ø4x35	x 16+2
H	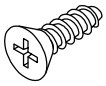	Ø3.5x12	x 40+2
I	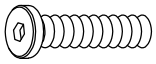	M6*48	x 12+2
J	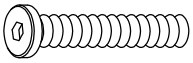	M6*60	x 8+1
K	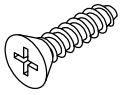	Ø3.5x16	x 8+1
L	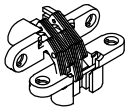		x 2
M	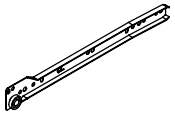		x 4
N	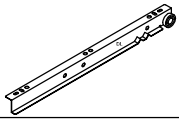		x 4
O	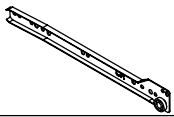		x 4
P	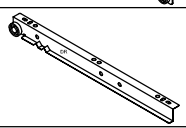		x 4

Q	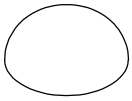	x 2+1
R	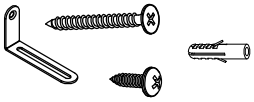	x 2
S	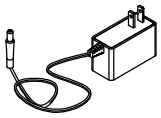	x 1
T		x 1
U	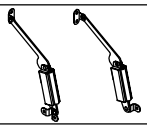	x 1
V	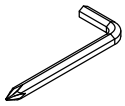	x 2

Check all the components & screws before assembl y.
Do not install in case part is missing, contact us to get.
Send email with your question to ***support@idealhouse.vip***.
We will resend within 24 hours.

Step1:



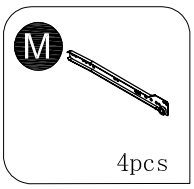

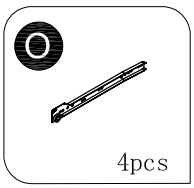

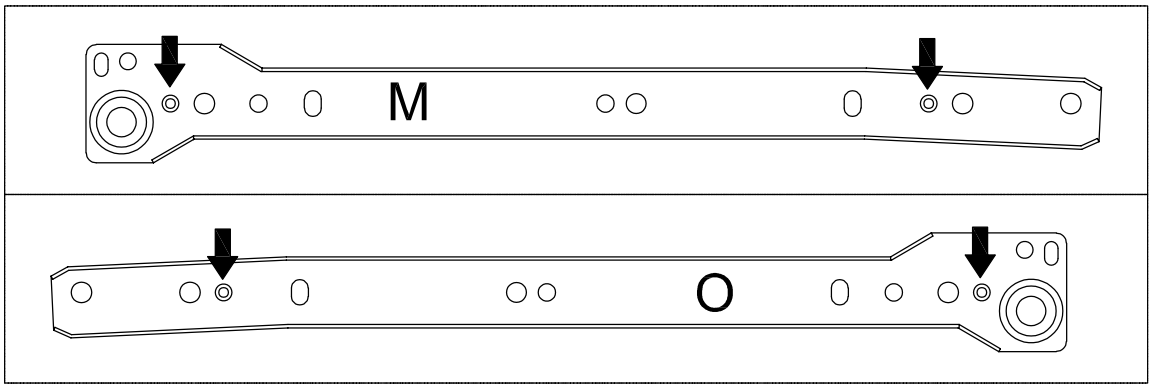

Step2:

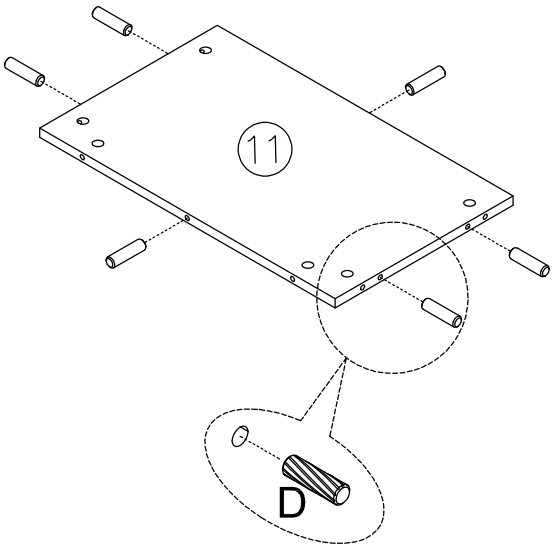

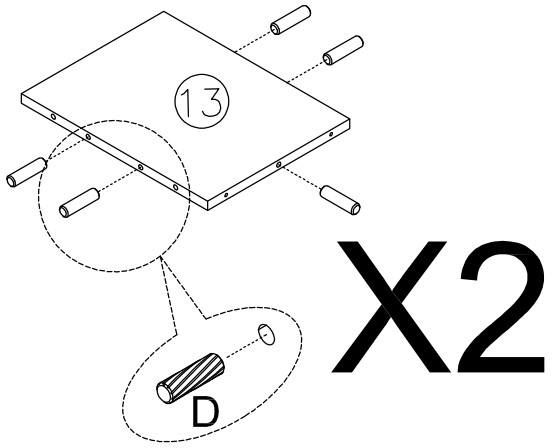

Step3:

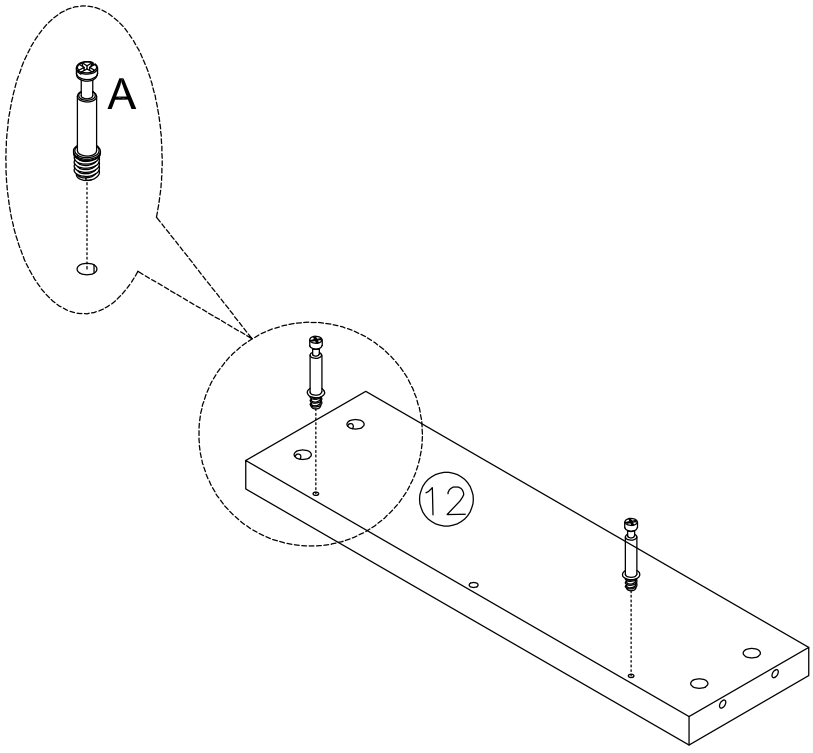

Step4:

B

Ø15x12mm
2pcs

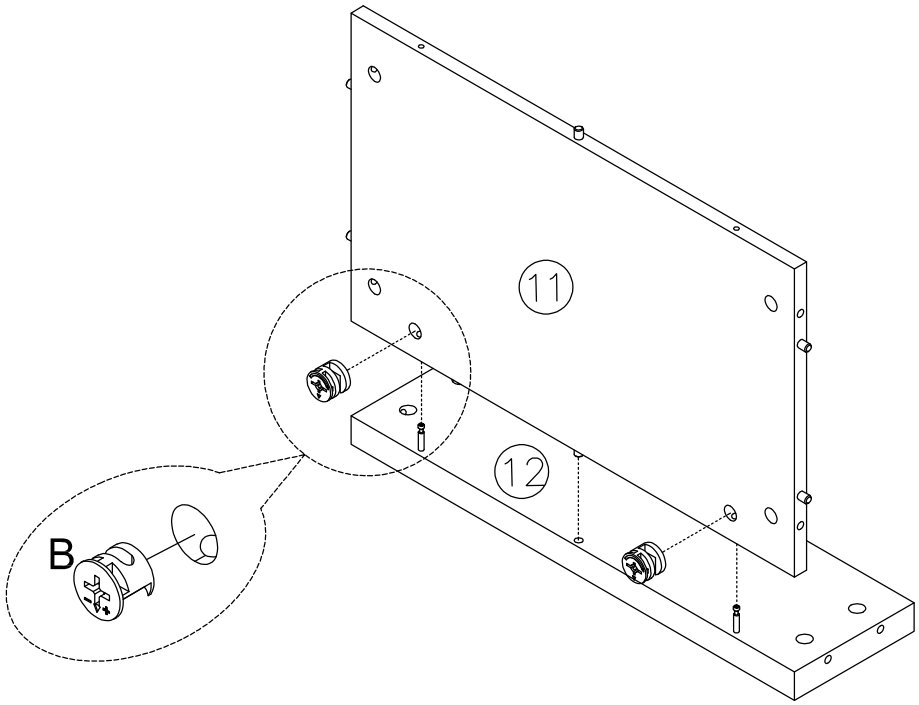

Step5:

A

Ø6x35mm
12pcs

D

Ø8x30mm
8pcs

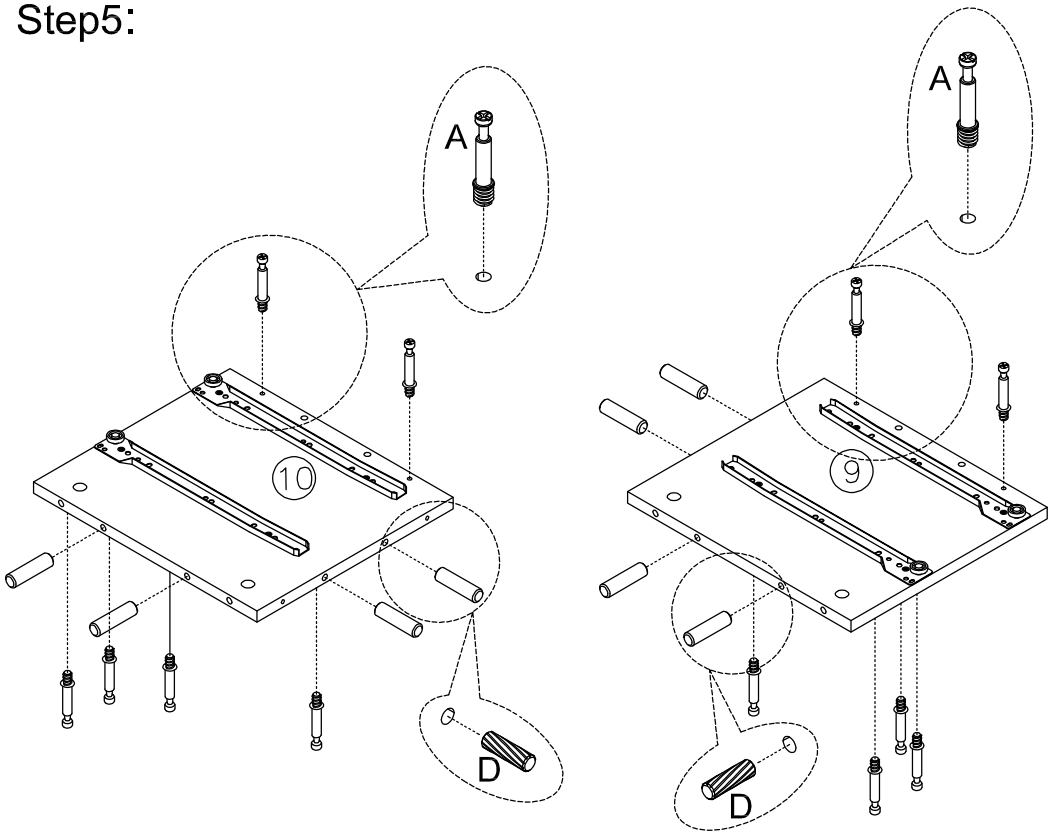

Step6:

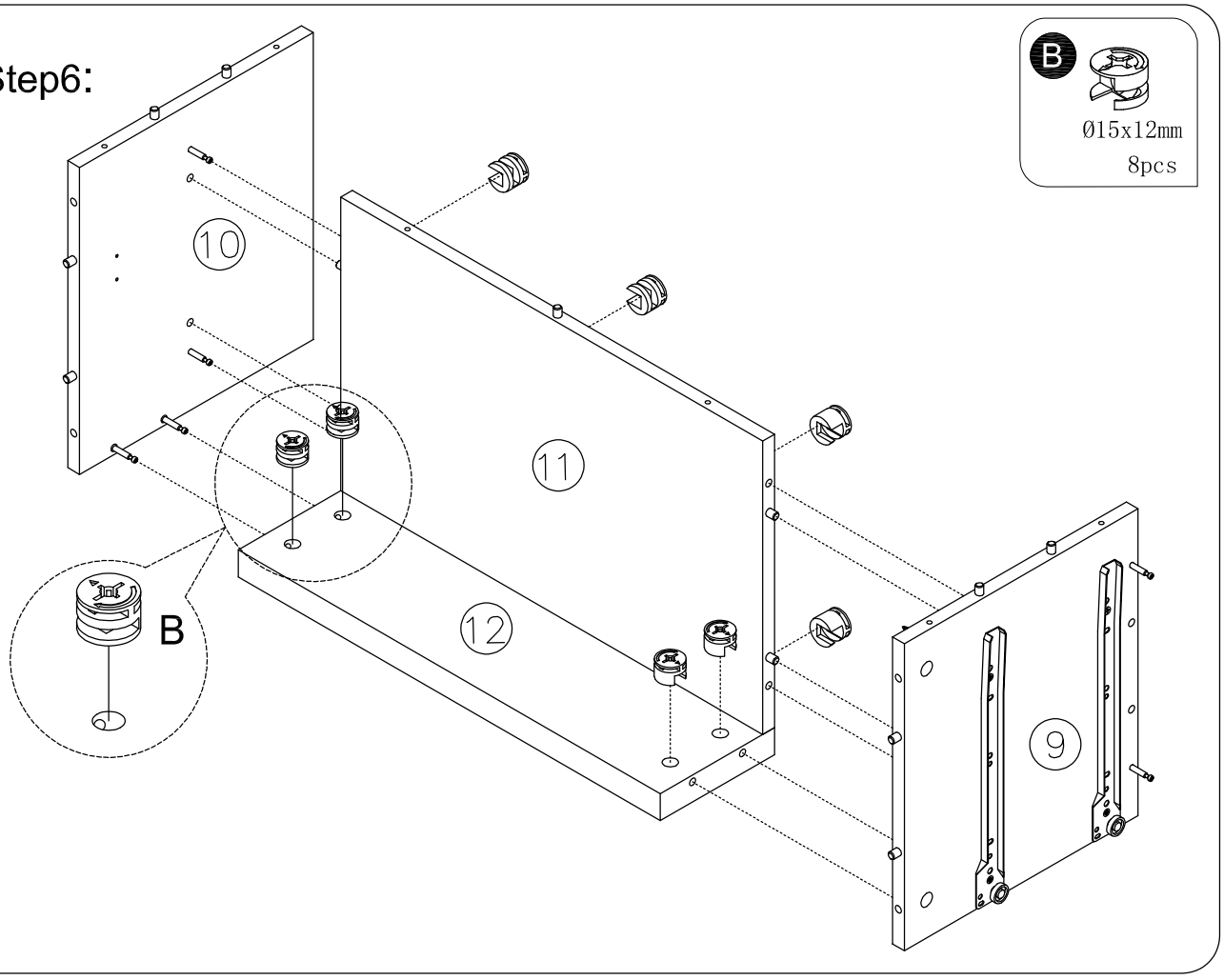

Step7:

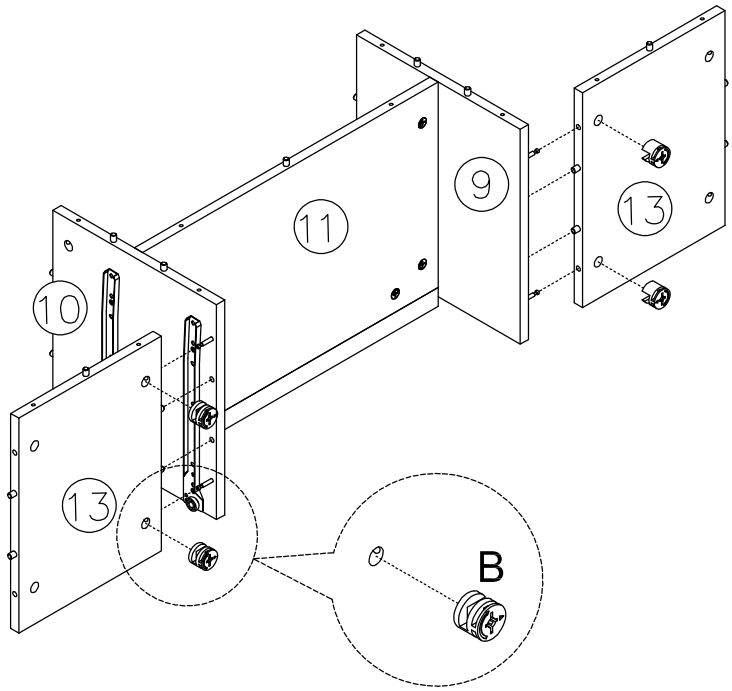

Step8:

D

Ø8x30mm
8pcs

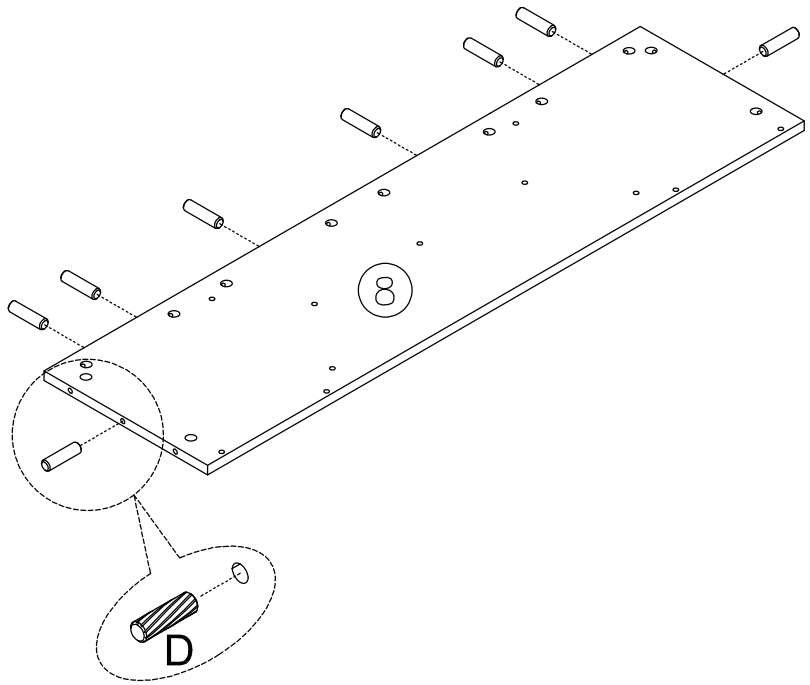

Step9:

C

Ø7x40mm
10pcs

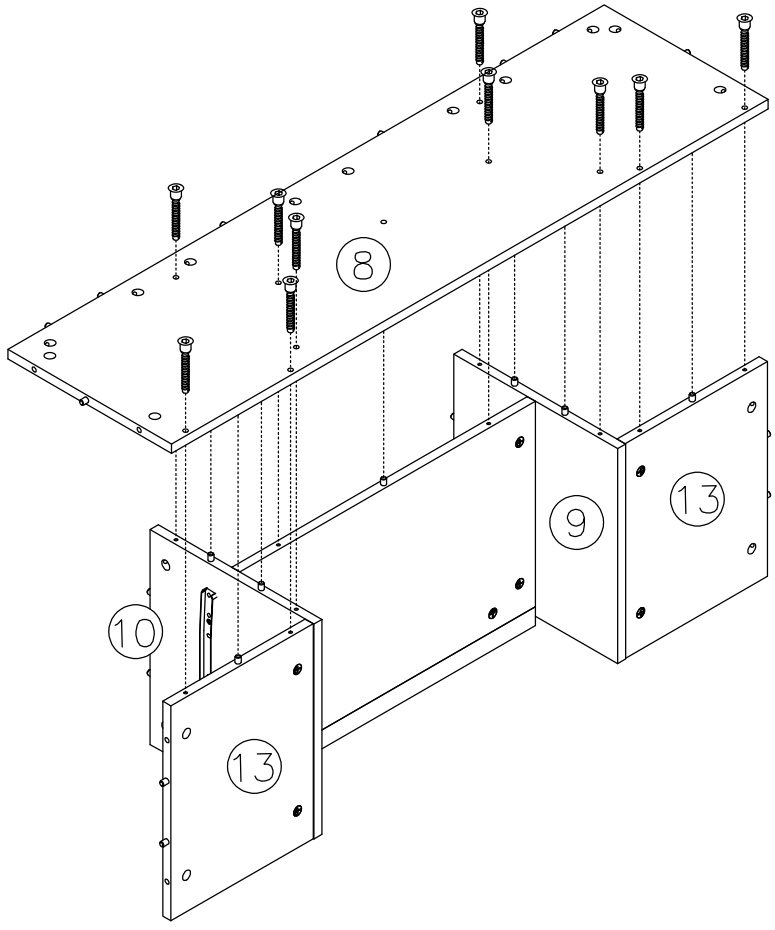

Step10:

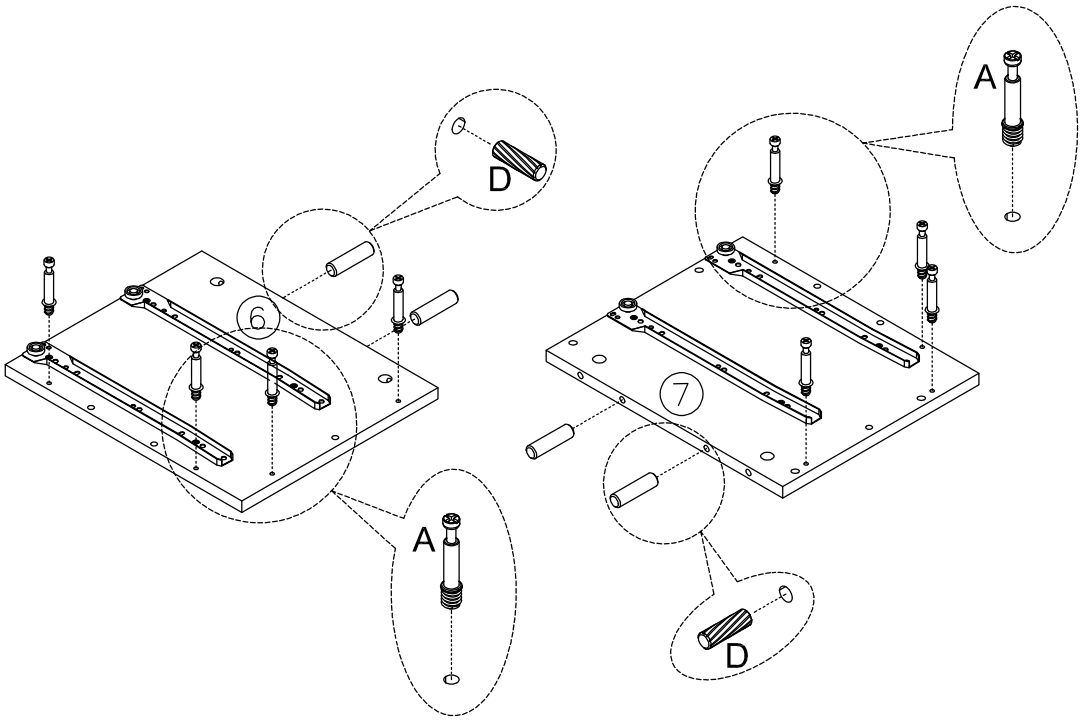

A

Ø6x35mm
8pcs

D

Ø8x30mm
4pcs

Step11:

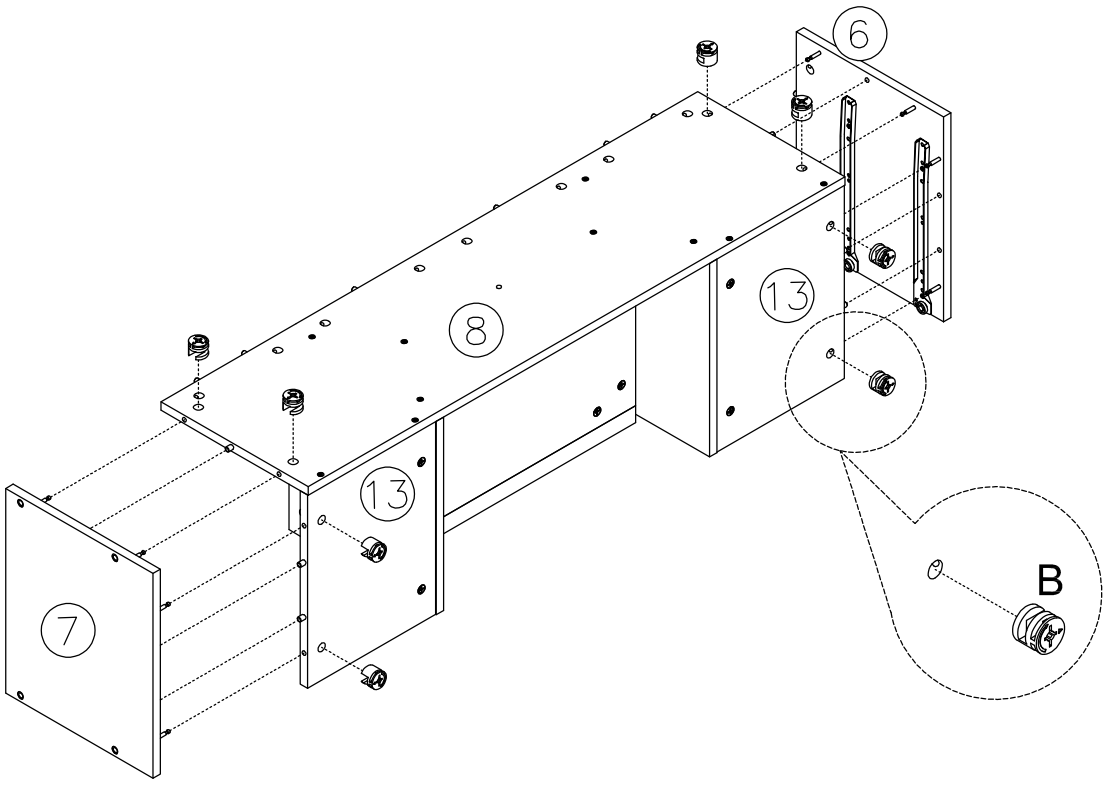

B

Ø15x12mm
8pcs

Step12:

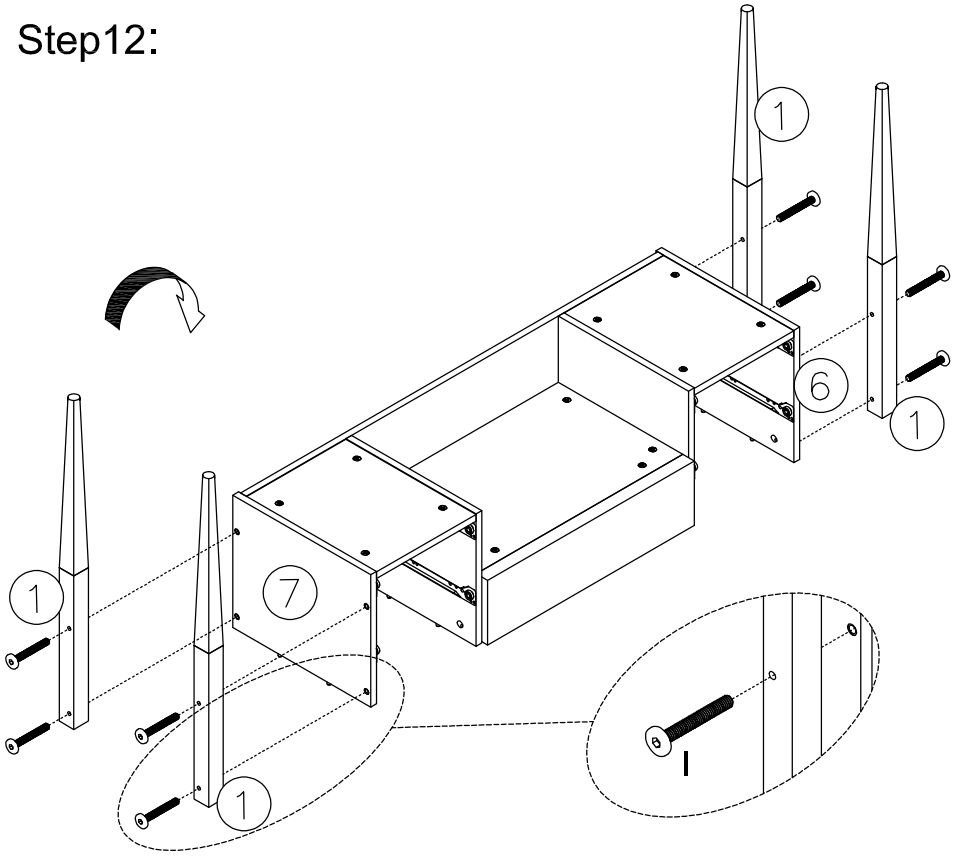

I

M6*48mm
8pcs

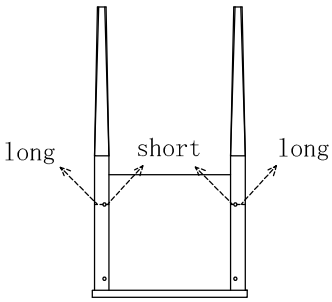

Step13:

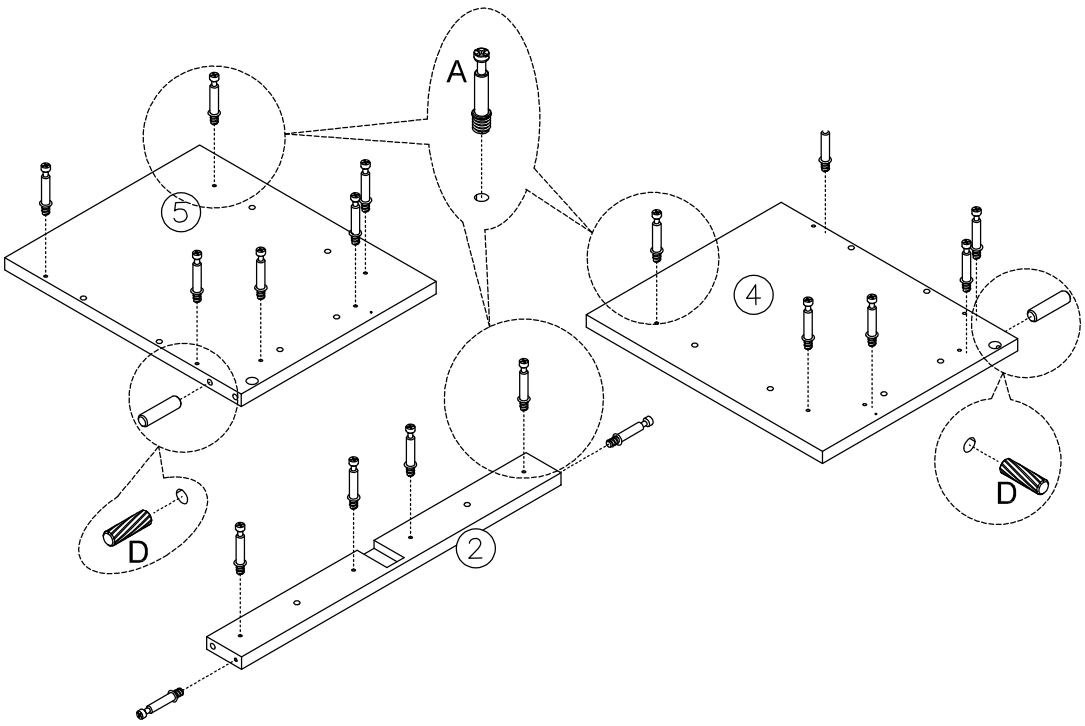

A

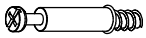

Ø6x35mm
18pcs

D



Ø8x30mm
2pcs

Step14:

B

Ø15x12mm

2pcs

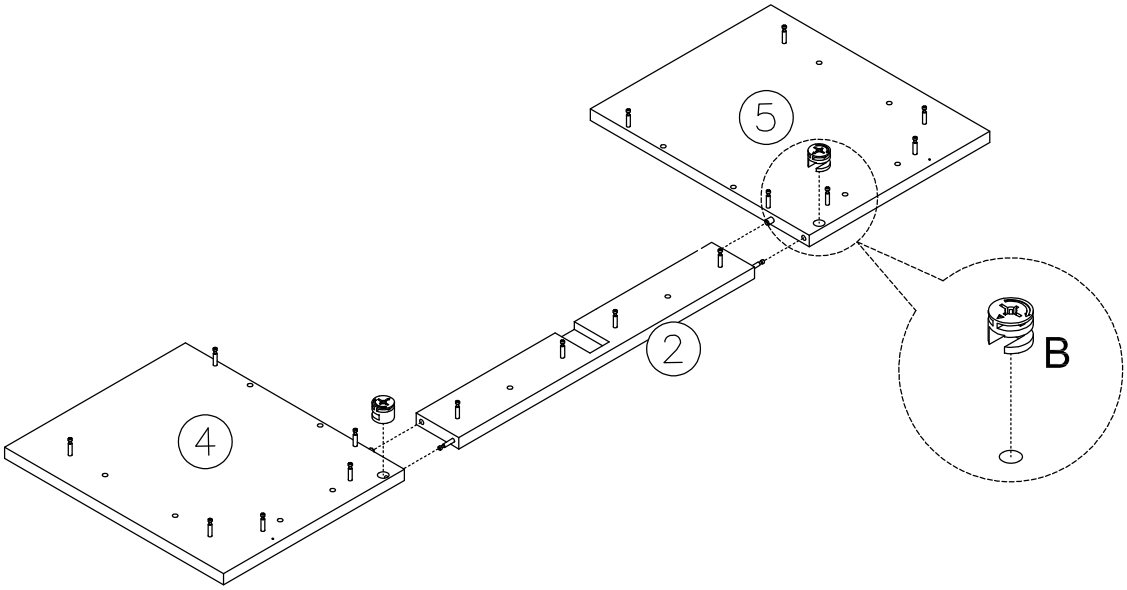

Step15:

B

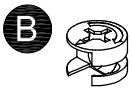

Ø15x12mm

16pcs

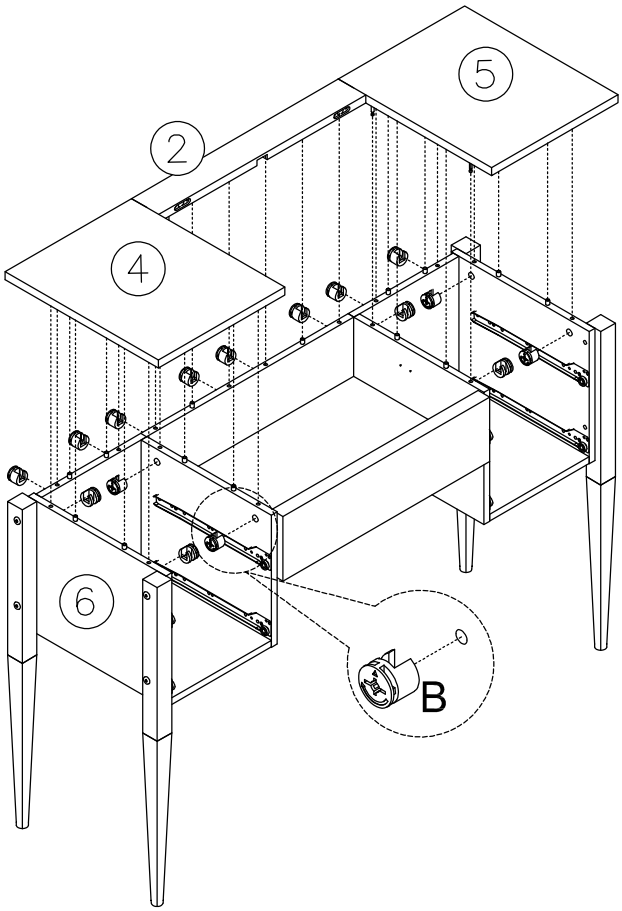

Step16:

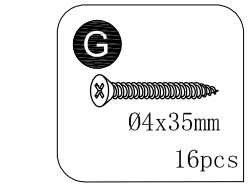

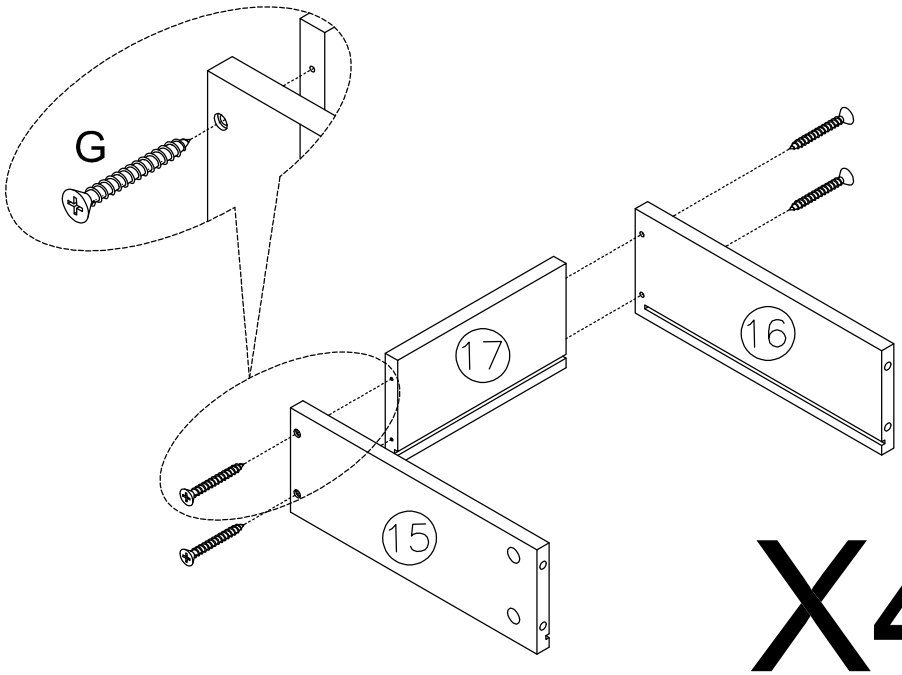

X4

Step17:

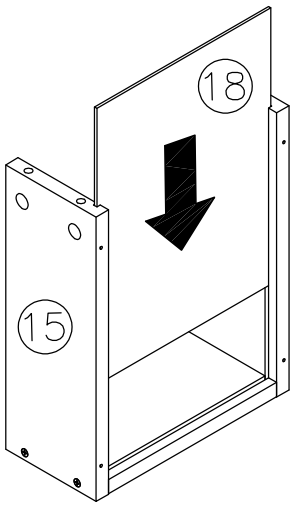

X4

Step18:

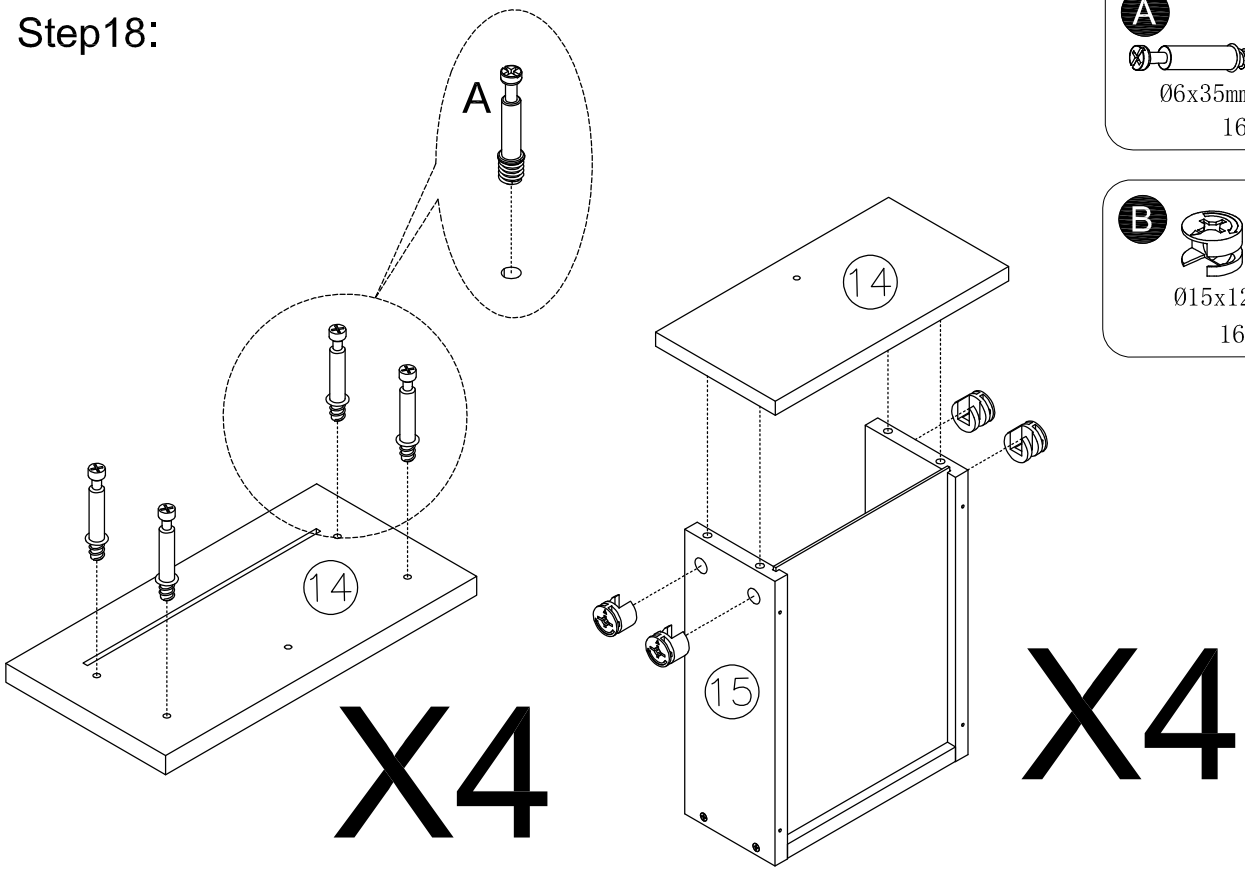

A
Ø6x35mm
16pcs

B
Ø15x12mm
16pcs

Step19:

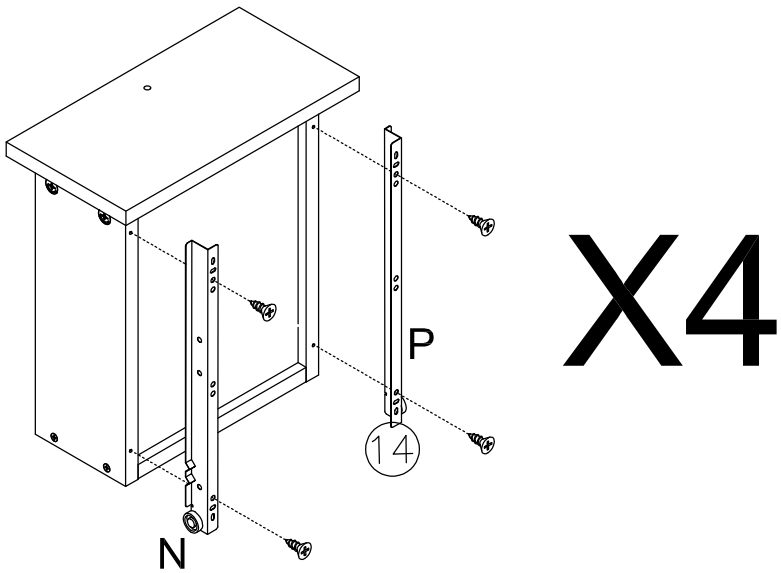

H
Ø3.5x12mm
2pcs

N
4pcs

P
4pcs

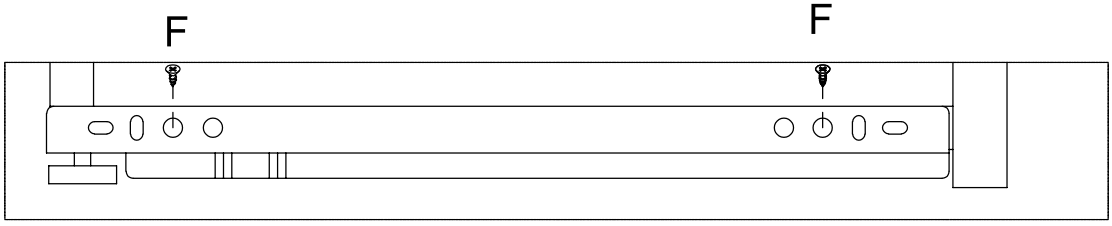

Step20:

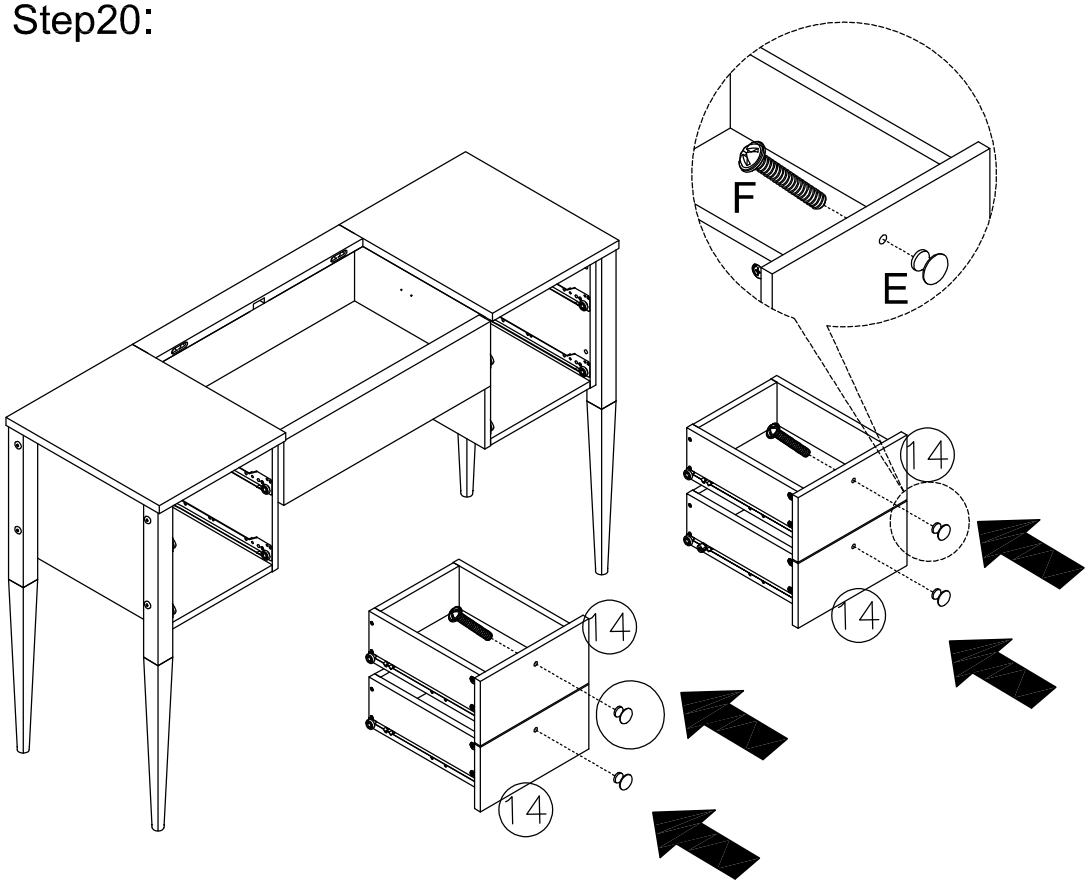

F
M4x18mm
4pcs

E
4pcs

Step21:

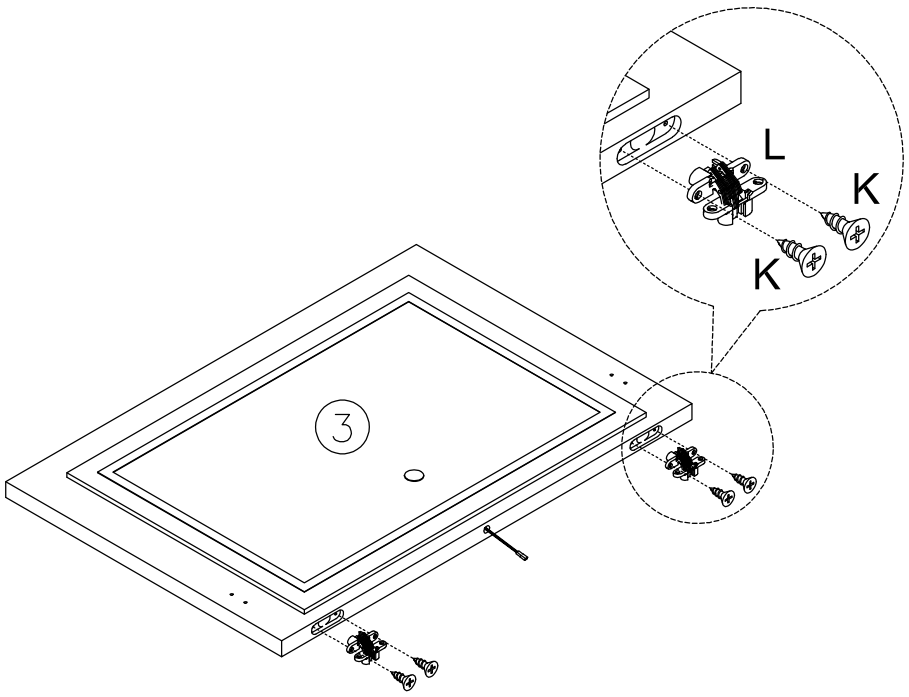

K
Ø3.5x16mm
4pcs

L
2pcs

Step22:

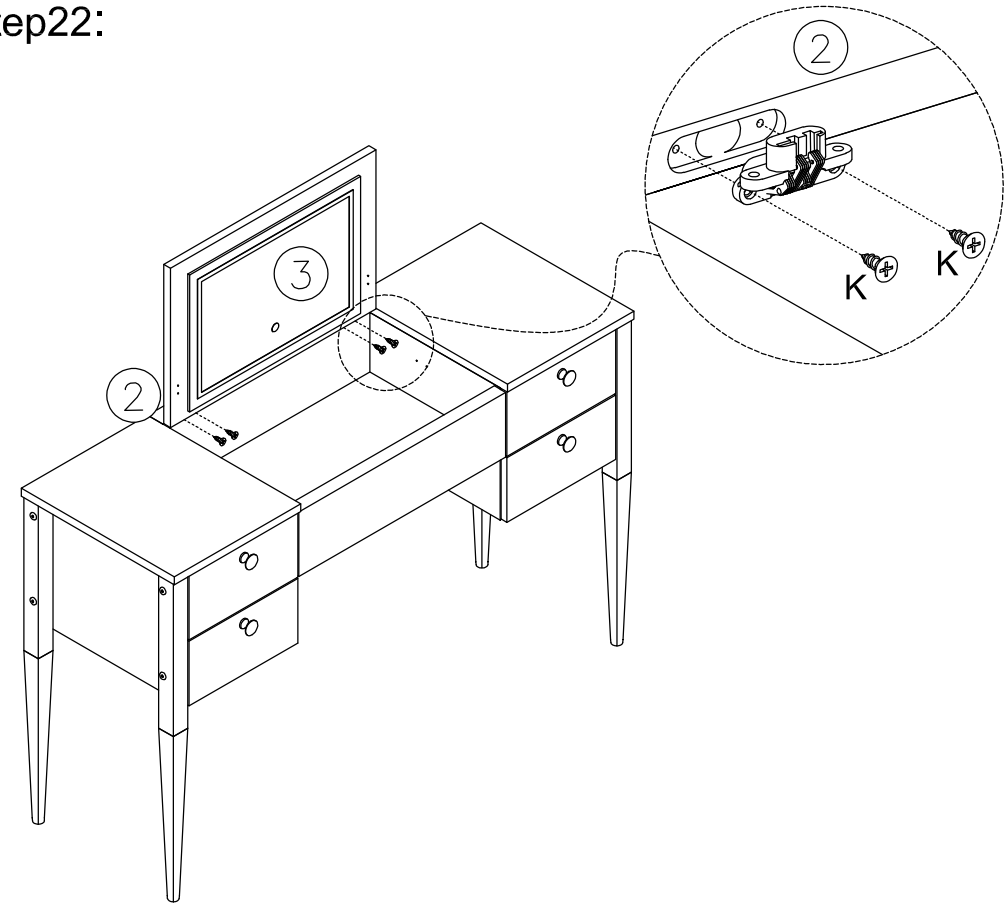

K

Ø3.5x16mm
4pcs

Step23:

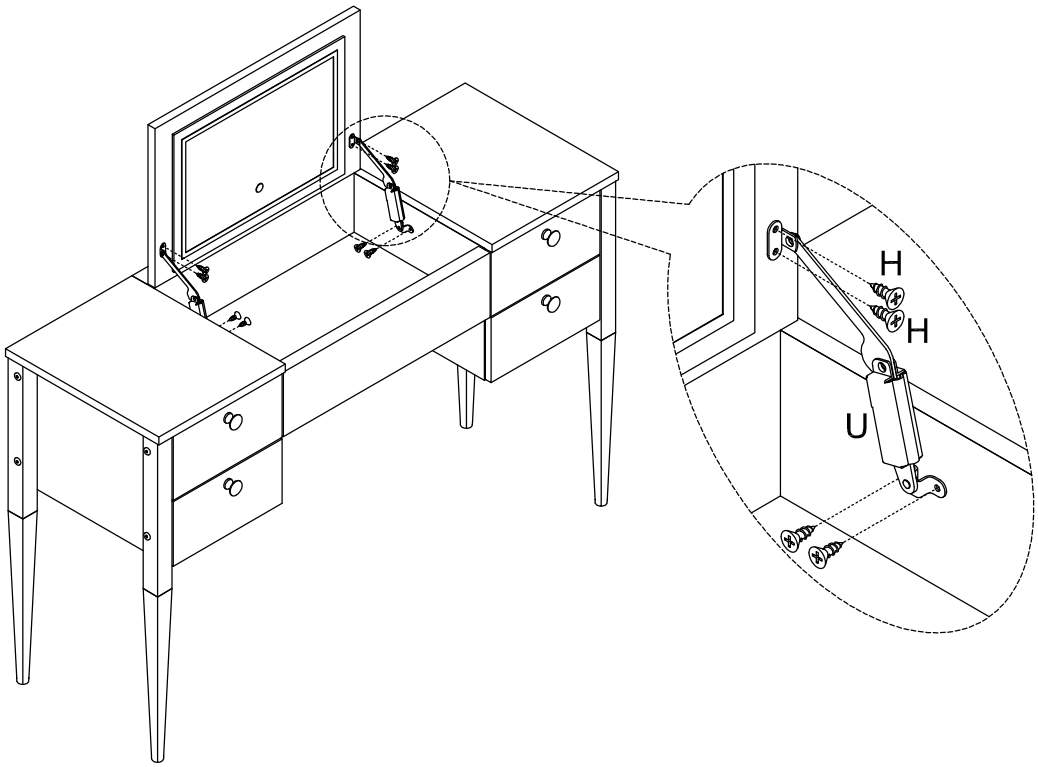

U

1pc

H

Ø3.5x12mm
8pcs

Step24:

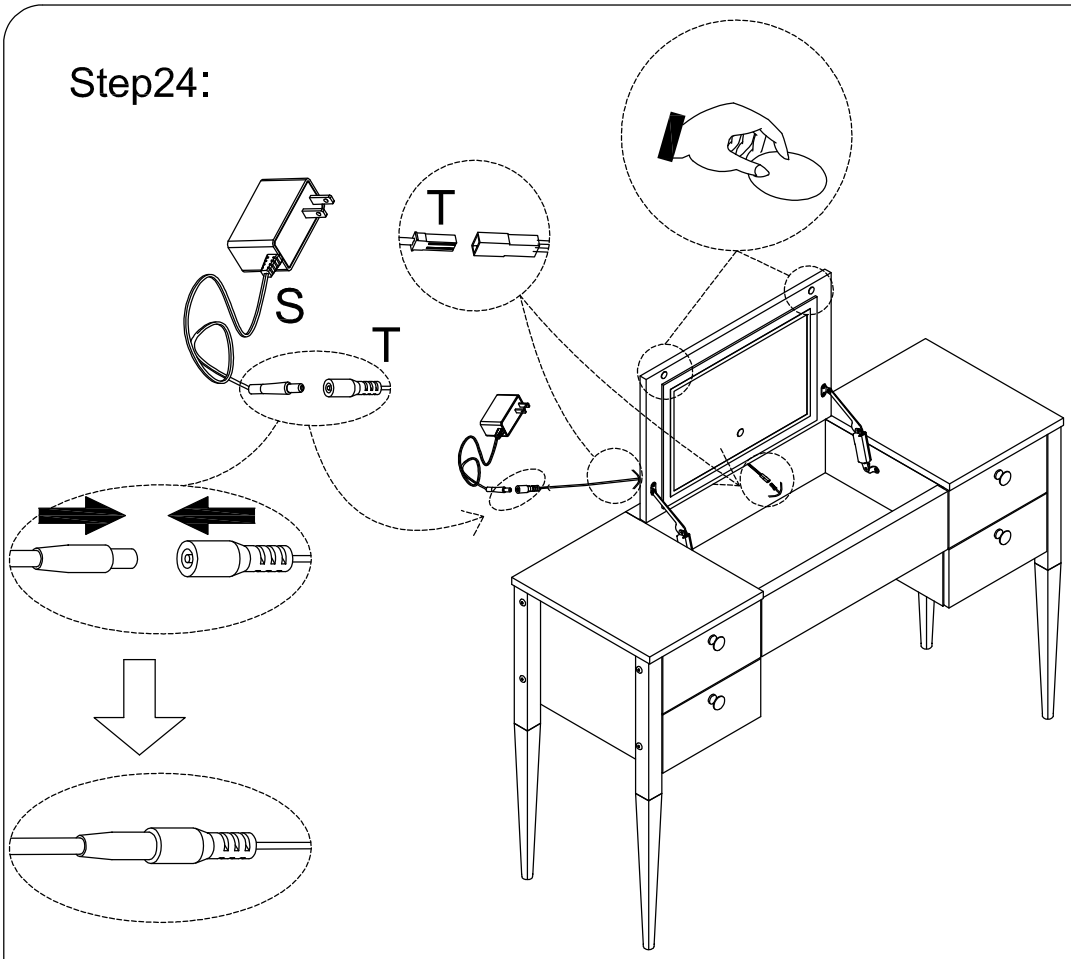

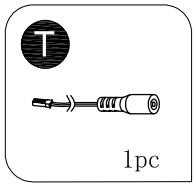

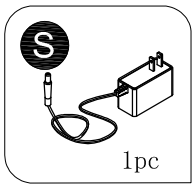

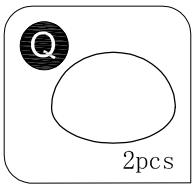

Step25:

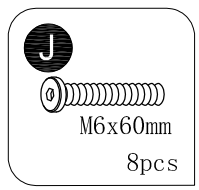

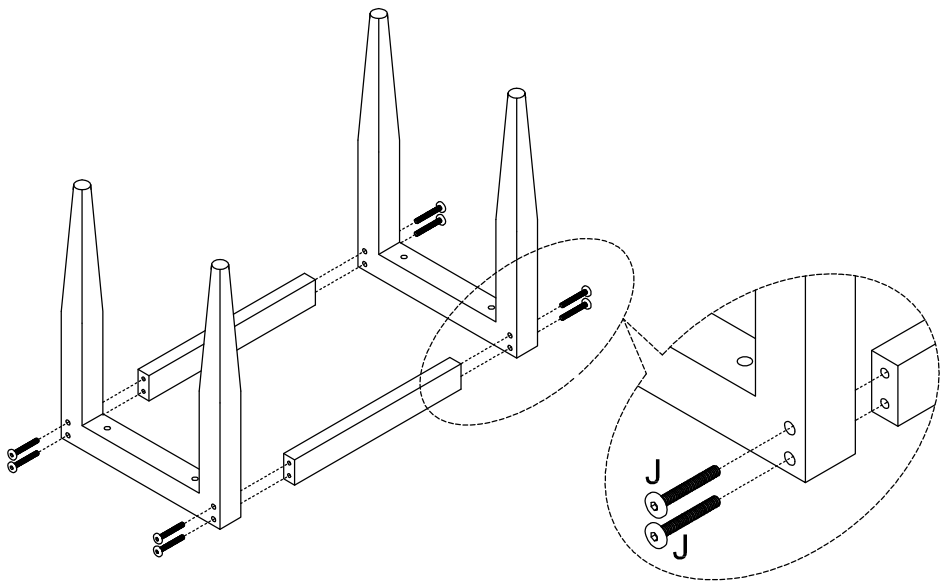

Step26:

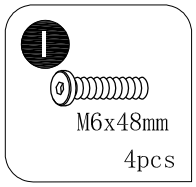

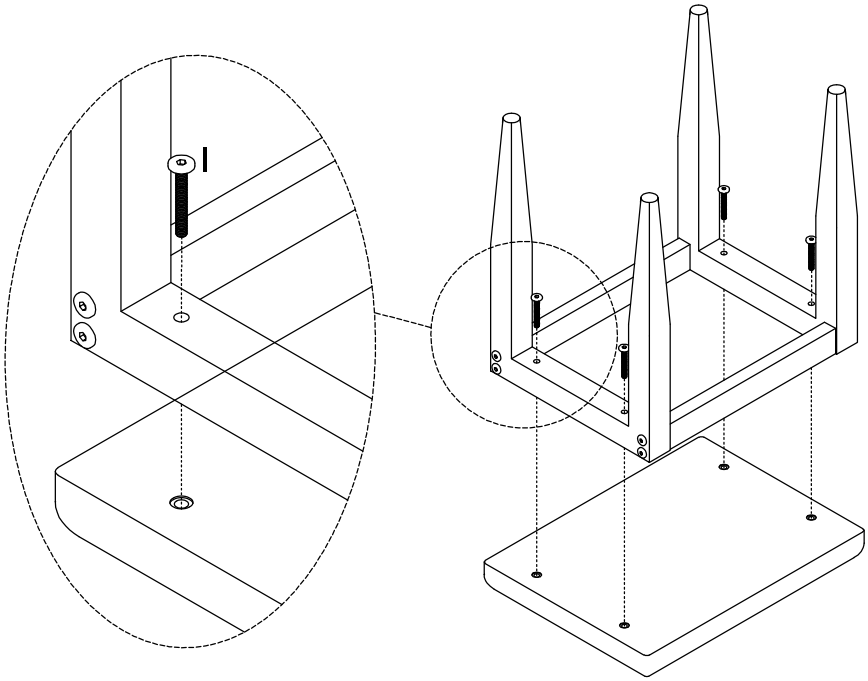

Step27:

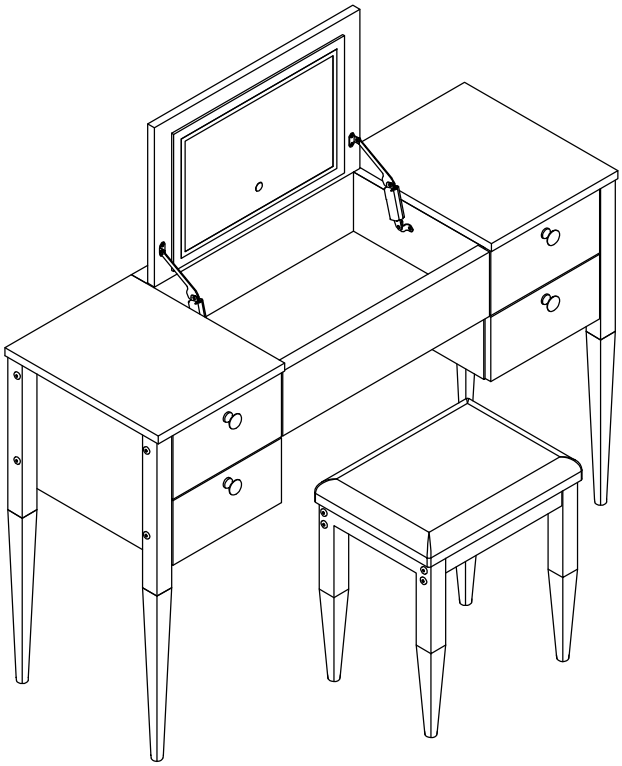

Step28:

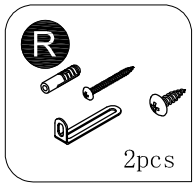

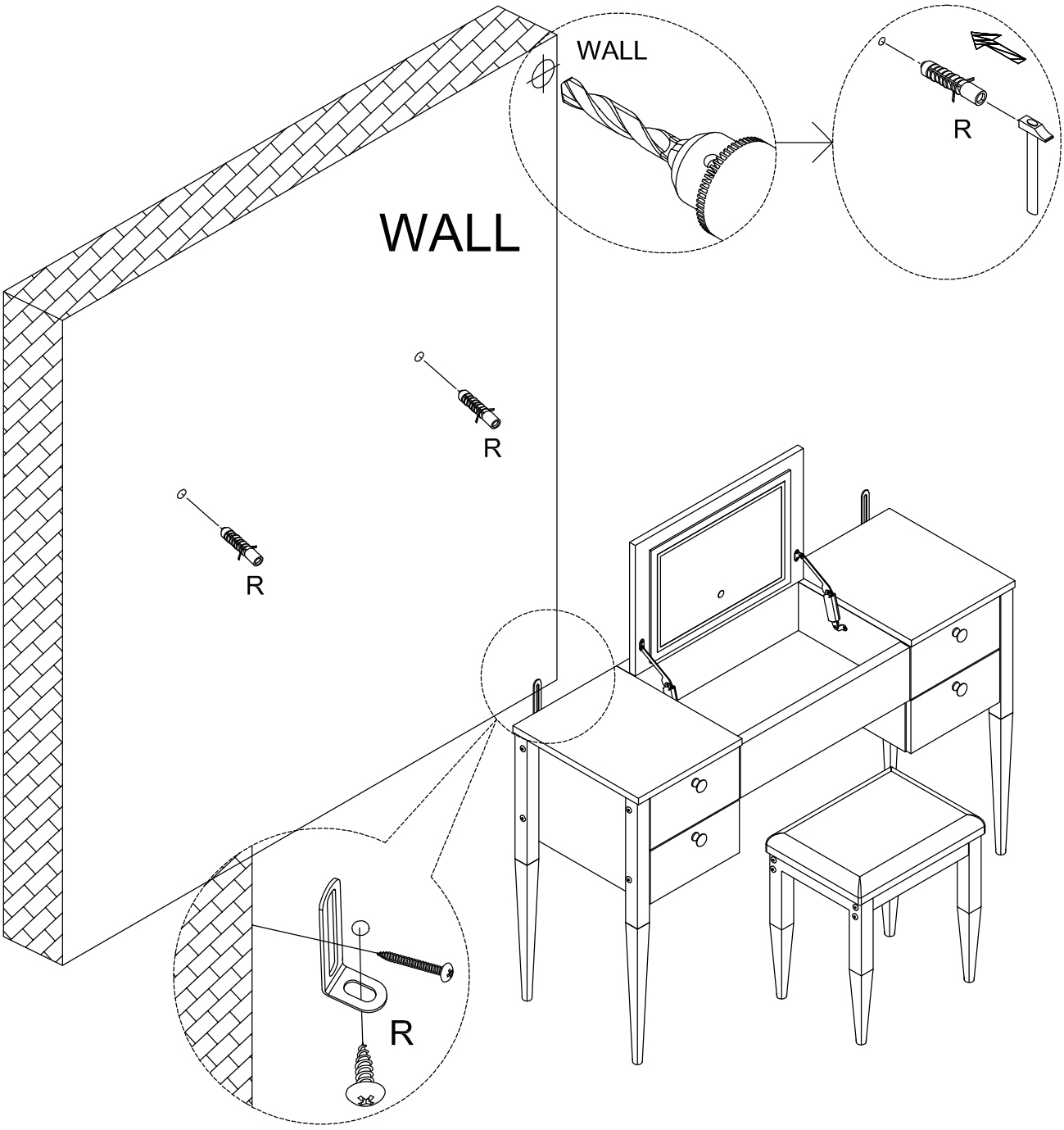

IMPORTANT SAFETY INFORMATION

Please carefully read the instructions and caution warnings below before assembling the product. Following this guide will ensure that you install, use and maintain the product properly.

- Please keep this installation and user manual/instructions for future reference in case you need to assemble the product.
- Do not assemble if you notice serious damage such as cracks or bends.
- During installation, please use work gloves for hand safety.
- Please assemble the unit on carpeted floor or the flat cardboard box to avoid scratching the surface or your floor while assembling on the floor.
- To assemble, please use the complimentary installation tools (Allen Wrench). Pay more attention to the direction of components at each steps.
- It is recommended that two people work together to assemble the product.
- Please do not tighten the screws up too much, just to 80% before you finish to make the installion go on successfully.

RETURN POLICY

We believe you will absolutely love your new product. But for some reason you want to return your item, please contact us within 30 days after receiving and ensure that the product which you want to return is in a good condition in the original box with all original certificates of purchase, manuals and accessories attached.

HOW TO MAINTAIN YOUR PRODUCT:

- Check the screws of the product are not loose from regular use.
- Do not use sharp instruments, rubbing alcohol, corrosive chemicals, or abrasive cleaners to clean the product.
- Do not keep the product in a damp environment for a long period of time. The damp environment may cause the iron components to rust and the plates to bulge and crack.

How to find us?

Customer Service

Email: support@idealhouse.vip