ASSEMBLY INSTRUCTIONS

BATHROOM VANITY



VANITY SIZE

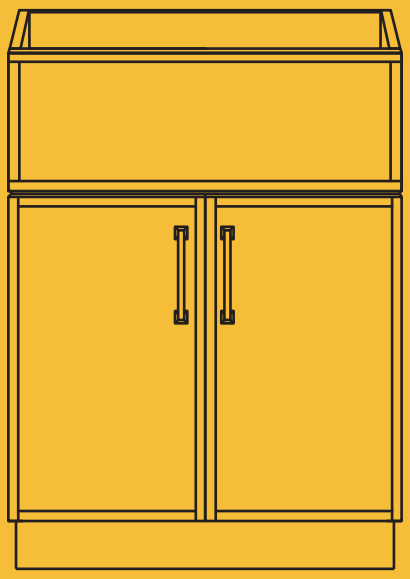

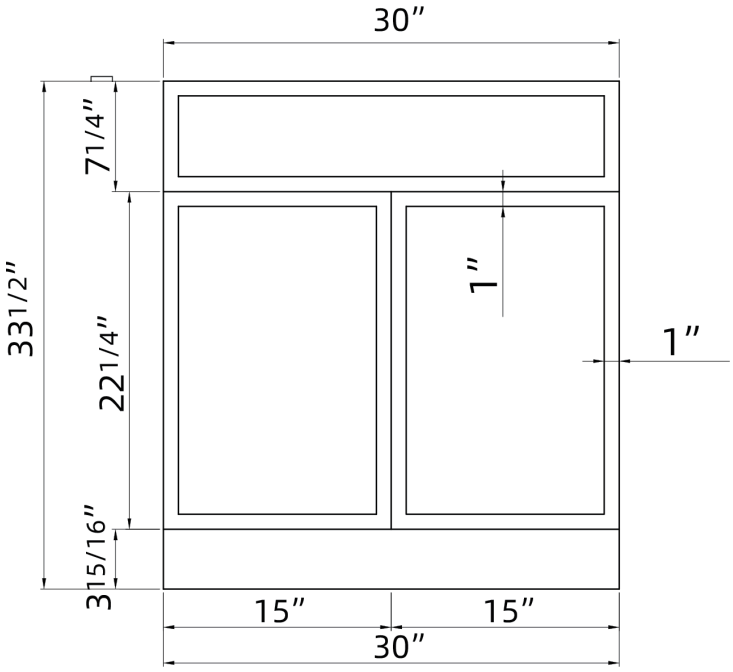

Front View

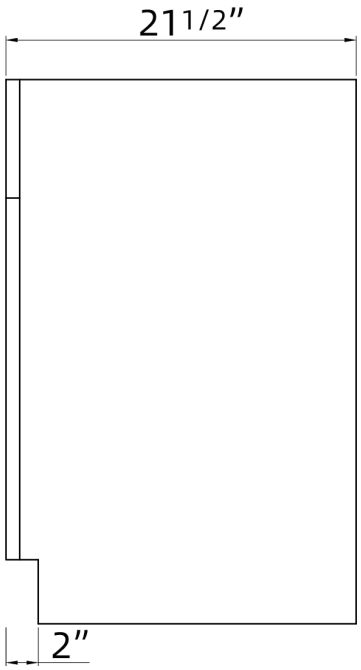

Side View

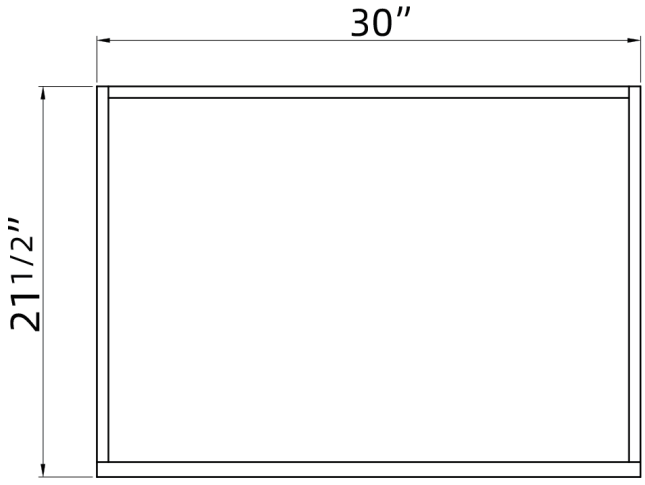

Top view

INSTALLATION GUIDE

EXPLOSION FIGURE

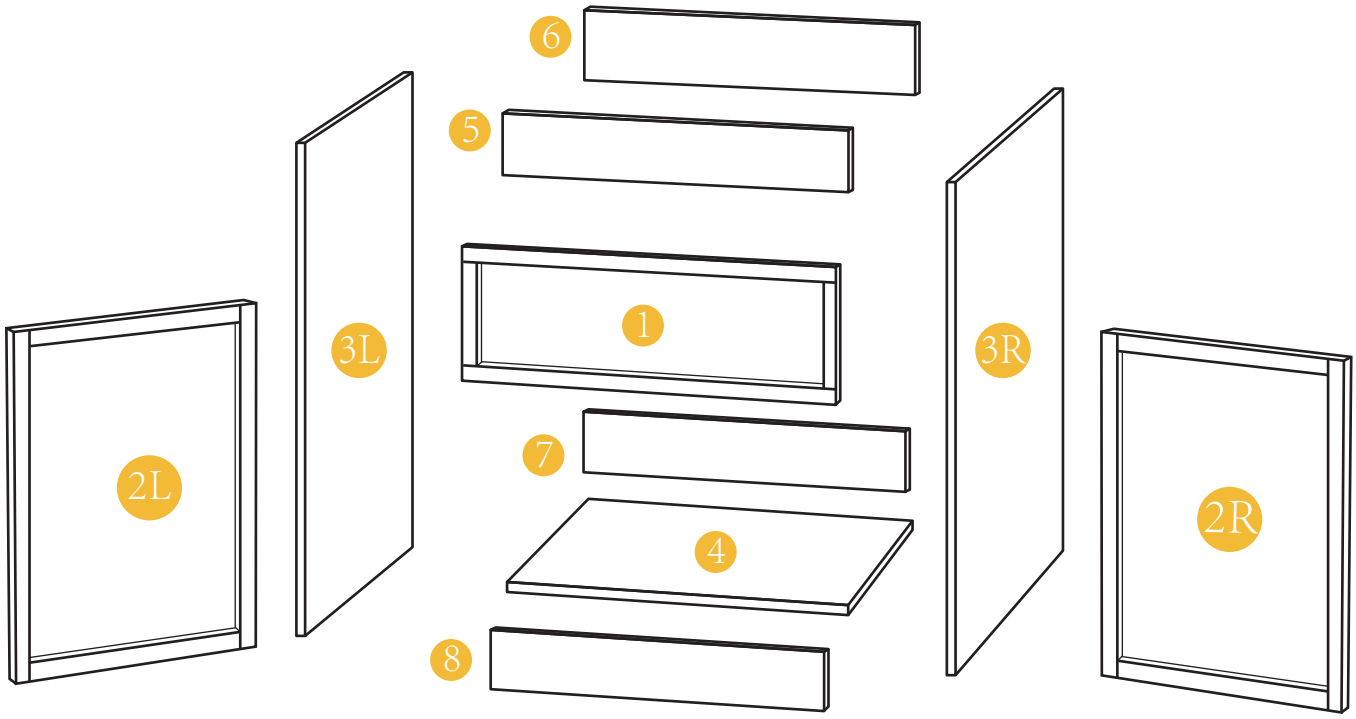

ACCESSORY DIAGRAM

 A x28	 B x28	 C x12	 D x2	 φ4*20mm E x4	 G x4	 H x4
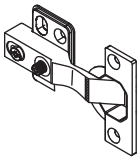 J x4	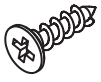 φ4*14mm K x24	 φ4*40mm N x2	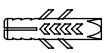 O x2	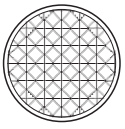 F x4		

INSTALLATION GUIDE

Installing a bathroom vanity can vary depending on the specific type and design of the vanity, as well as your bathroom setup. Here are some general steps to guide you through the process:

NOTE:A drain pipe and trap are not included with this vanity.

1. **Prepare the area:** Clear out the space where the vanity will be installed. Ensure the plumbing lines are in place and ready for connection.
2. **Measure the space:** Measure the dimensions of the vanity and the available space in your bathroom to ensure it will fit properly.
3. **Turn off the water supply:** Before starting any work, be sure to turn off the water supply to the bathroom.
4. **Remove the old vanity:** If there is an existing vanity, you will need to disconnect the plumbing, remove the sink, and take out the old vanity.

TOOLS REQUIRED



STEP 1

Refer to the illustration.
Drive in the screws (A) into the panel (4), and tighten them carefully.

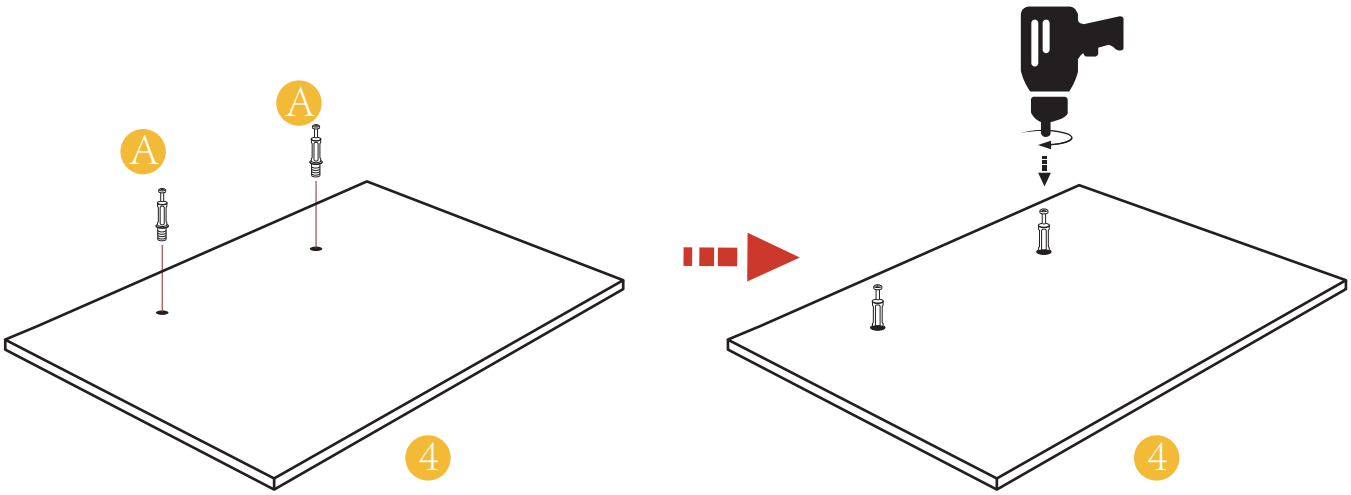

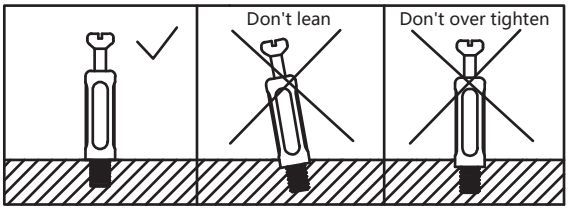

Attention: Stop tightening the screws until they meet the rubber particles, and do not over-tighten to prevent the screws from deforming.

Ⓐ All rubber particles are fit for screws (A) to tighten

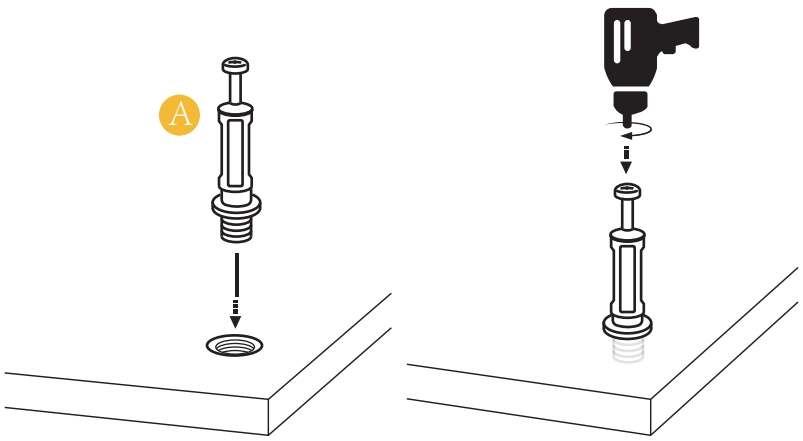

STEP 2

Refer to the illustration.
Drive in the screw (A) into the panel (8), splice (4),(8).

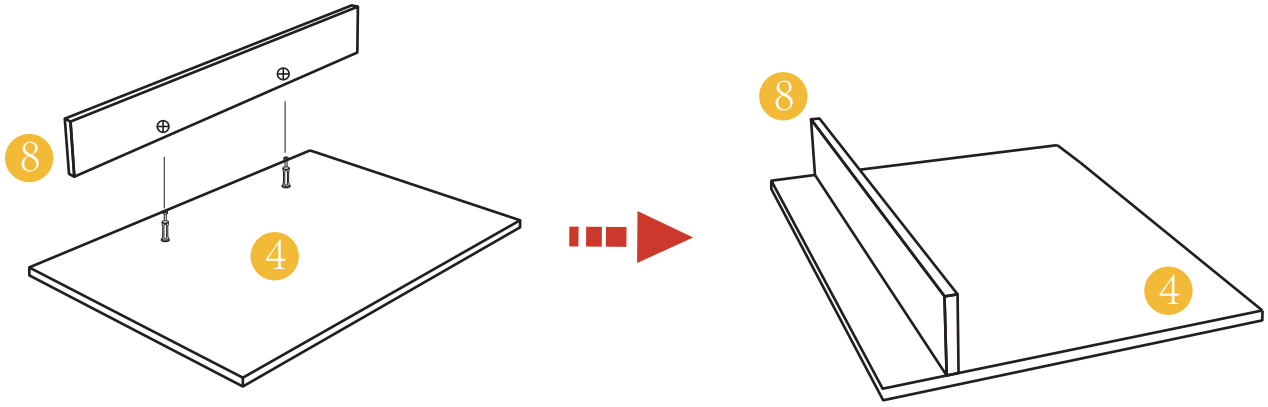

STEP 3

After the panels are spliced, you can rotate clockwise buckle (B) to lock the panels, and rotate counterclockwise to unlock and remove the panels.

Ⓑ All holes diameter 15mm are fit for buckle (B) to tighten

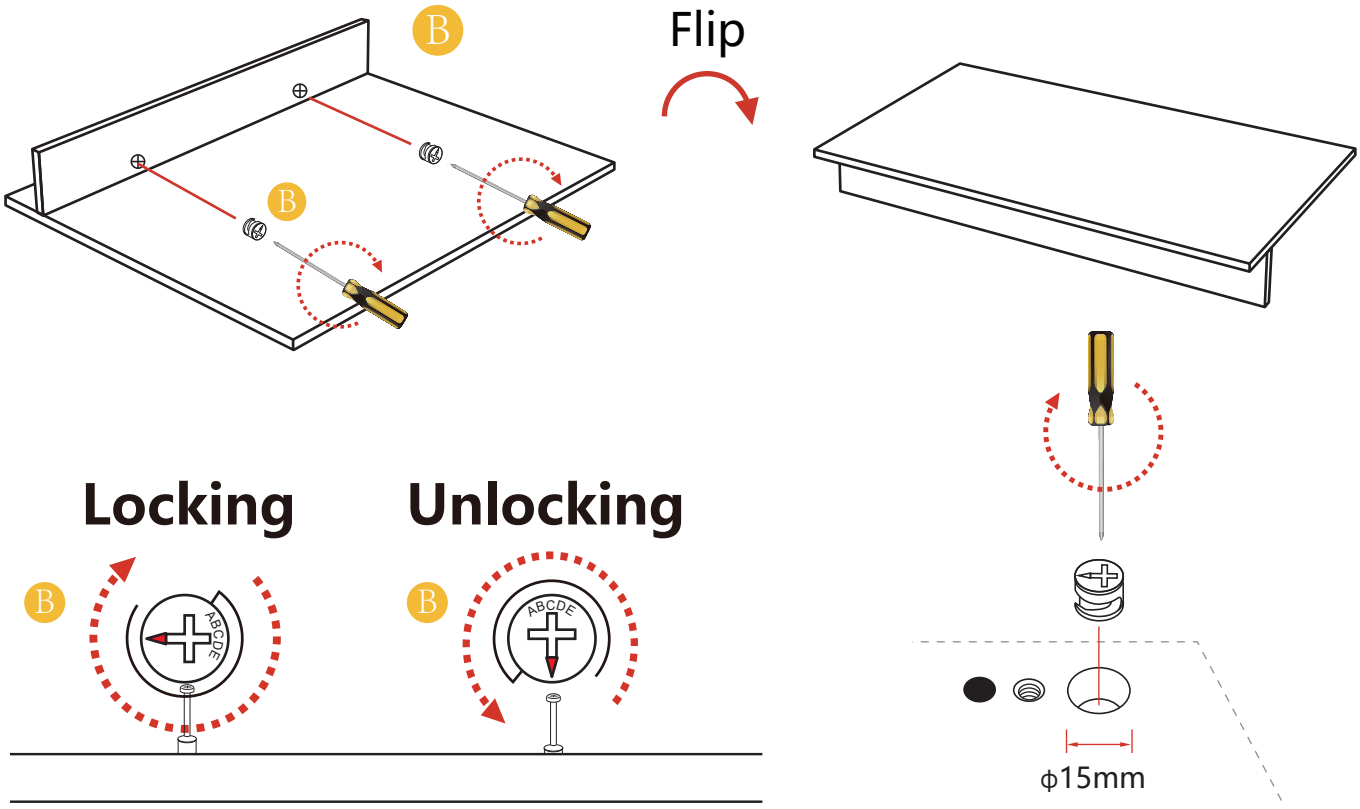

Refer to the illustration.
Drive in the screw (A) into the panel (7),
splice (4),(8)and (7).

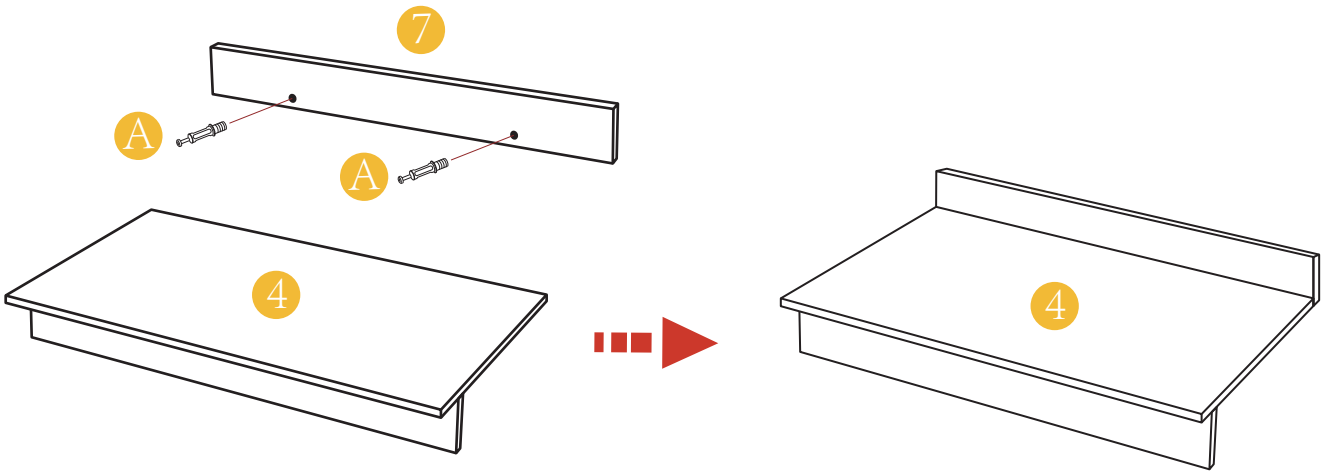

STEP 4

Refer to the illustration.
Drive in the screws (A) into the panels (3), and tighten them carefully.
Tap the wooden tenons(C) into the panels (3).

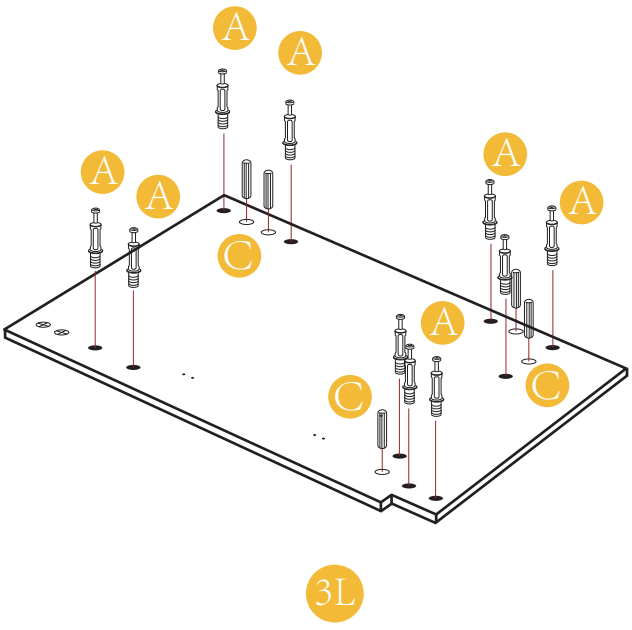

Left side panel

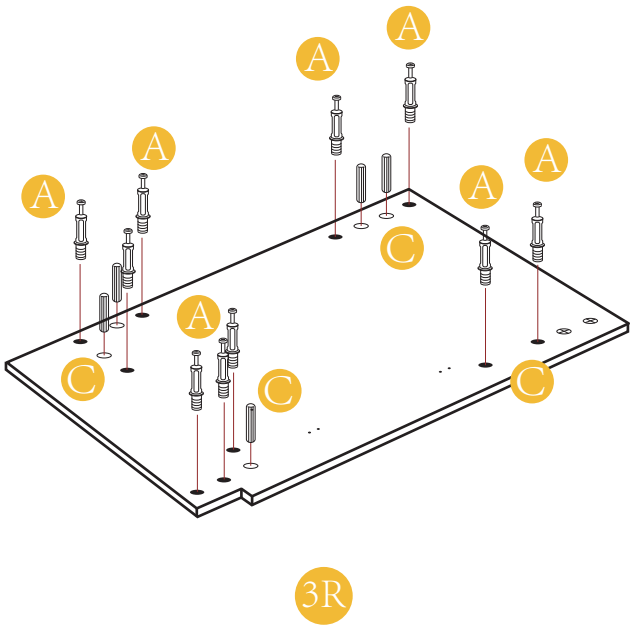

Right side panel

STEP 5

Refer to the illustration.
Splice left and right side panels with (4),(5),(6).

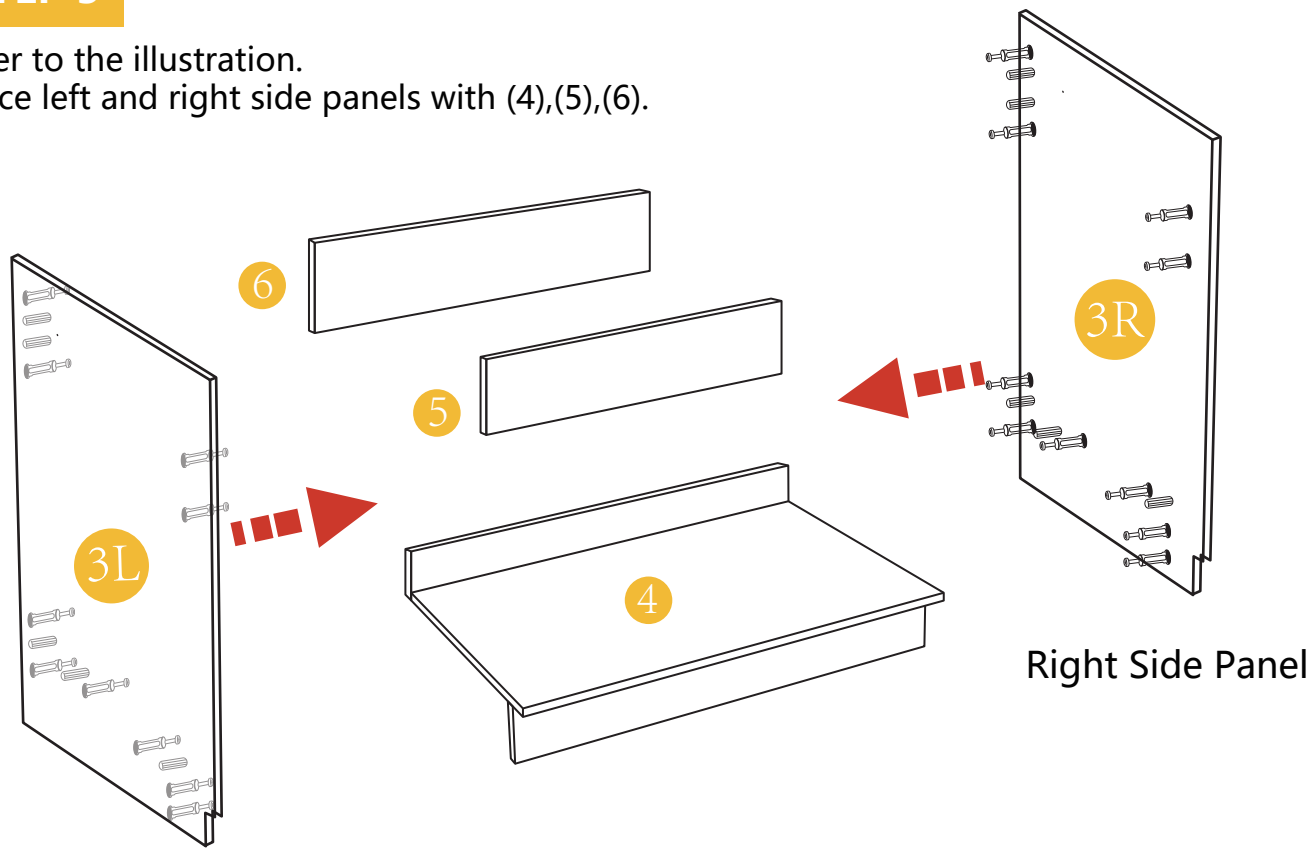

STEP 6

Lay down to Rotate clockwise buckles (B) to lock the panels.

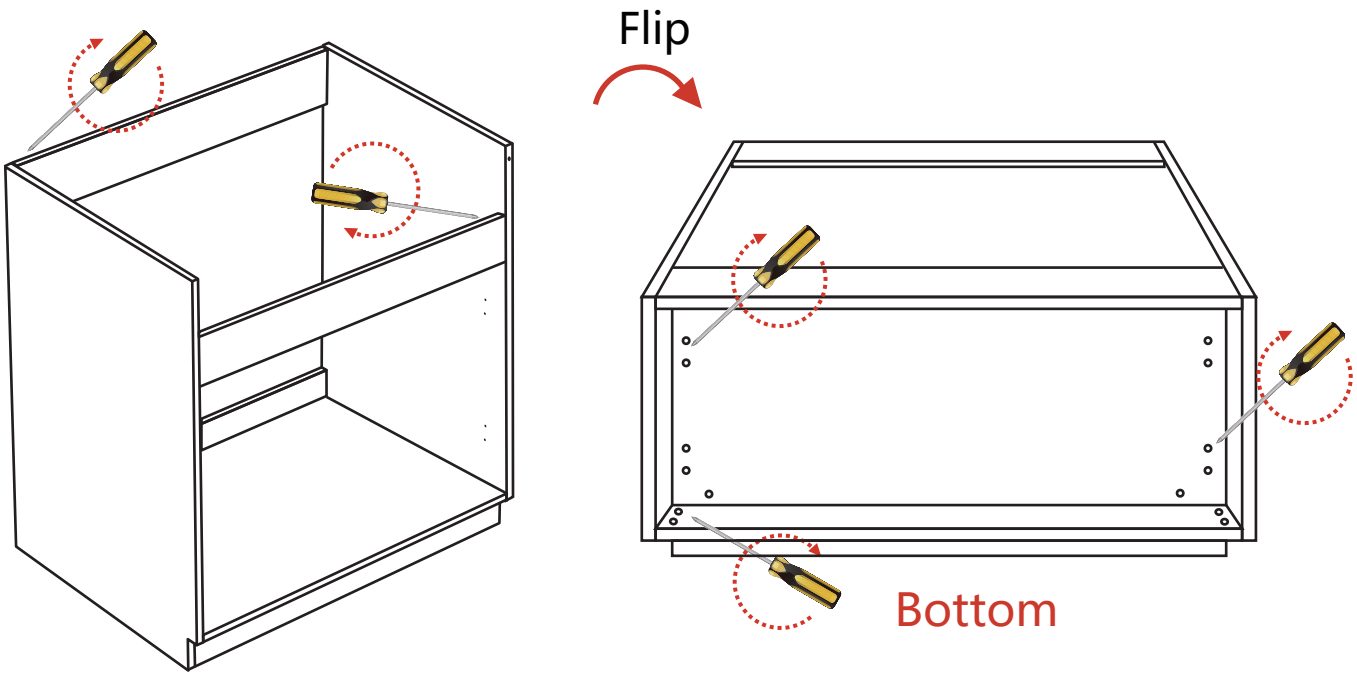

STEP 6

Refer to the illustration.
Tap the pads (G) into the cabinet bottom with a soft mallet until fully seated.

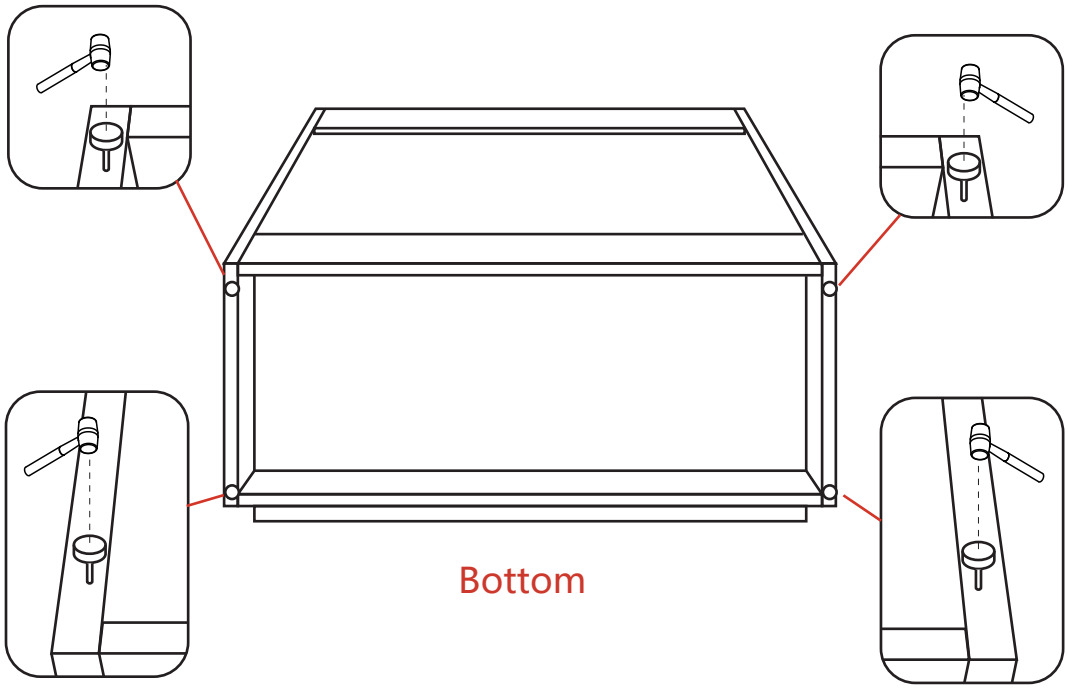

STEP 7

Refer to the illustration.
Drive in the screws (A)and(C) into the panel (1),Splice left and right side panels with (1).

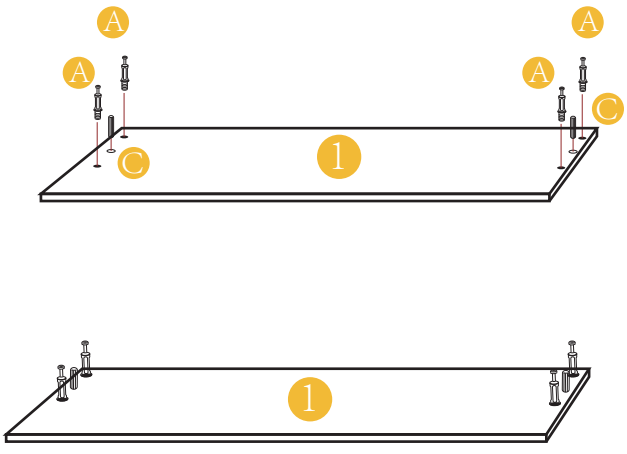

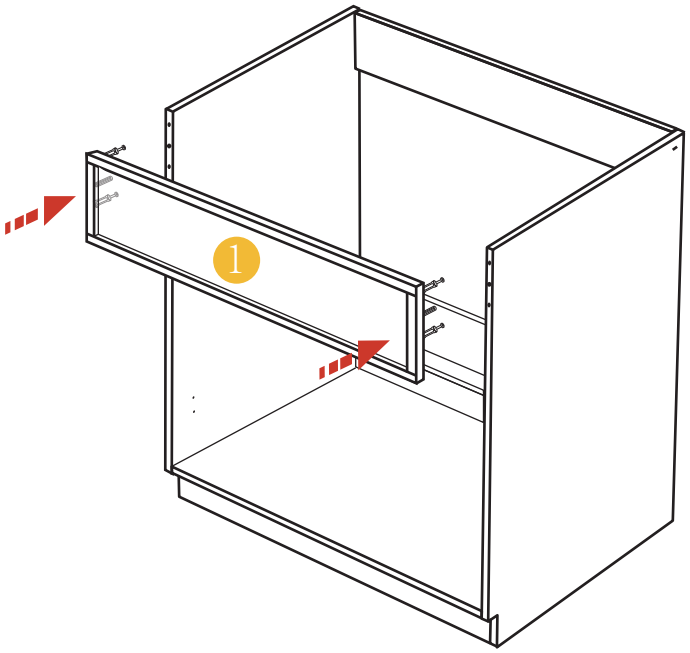

STEP 8

Lay down to Rotate clockwise buckles (B) to lock the panels.

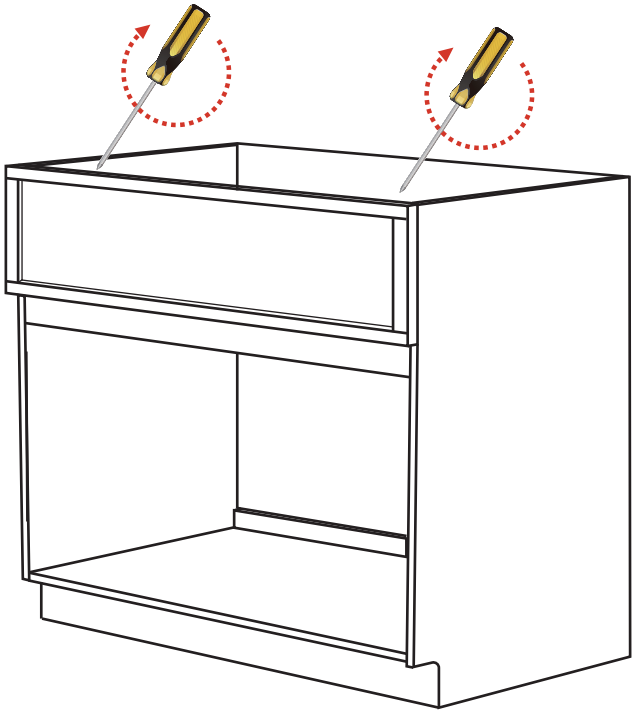

STEP 9

Refer to the illustration.
Assemble handles and full overlay hinges to doors.

Left Door

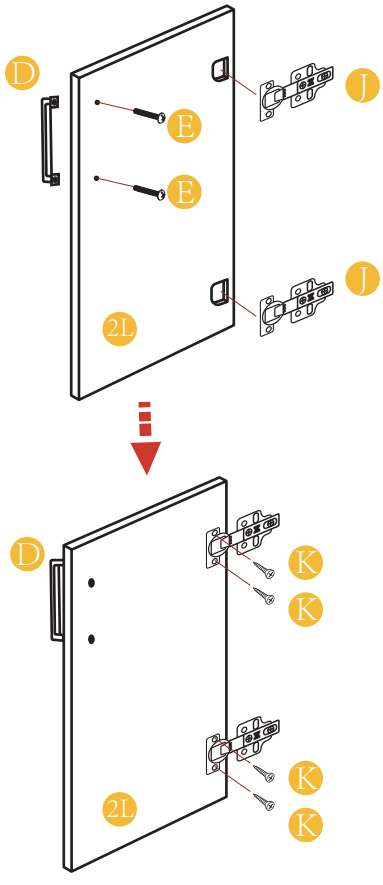

Right Door

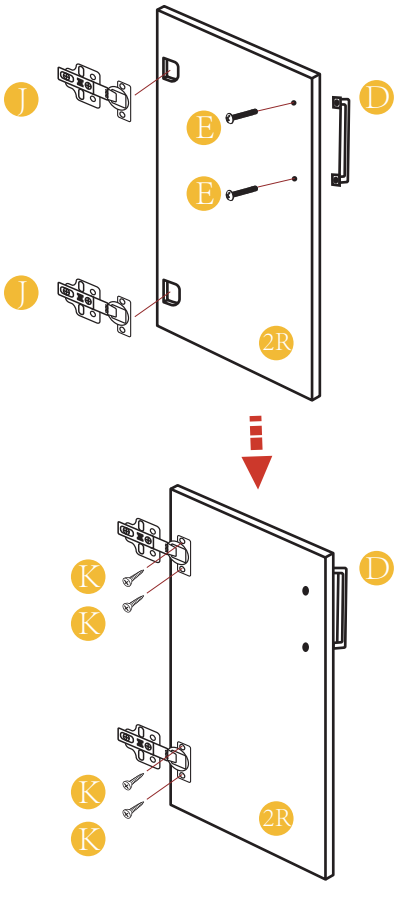

STEP 10

Stick-on anti-collision pads (H)

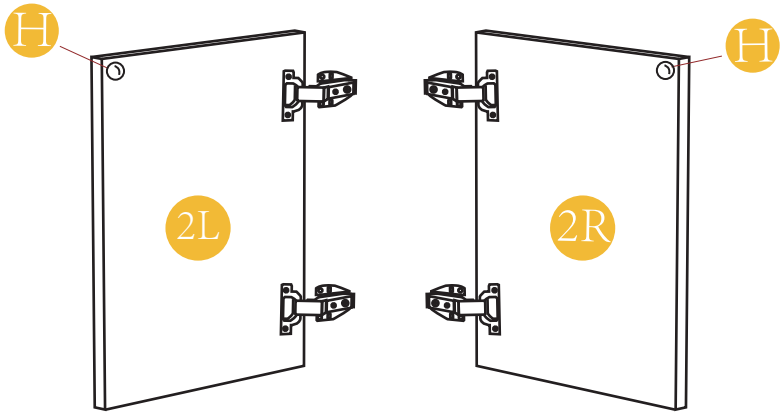

STEP 11

Refer to the illustration.
Drive in the screws (K) to fix the panel (2) tightenly.

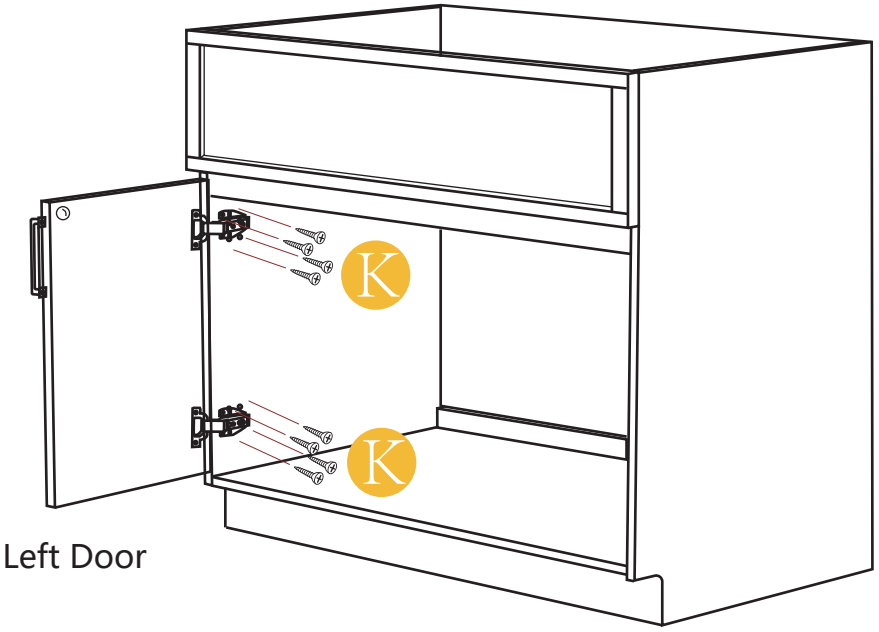

Left Door

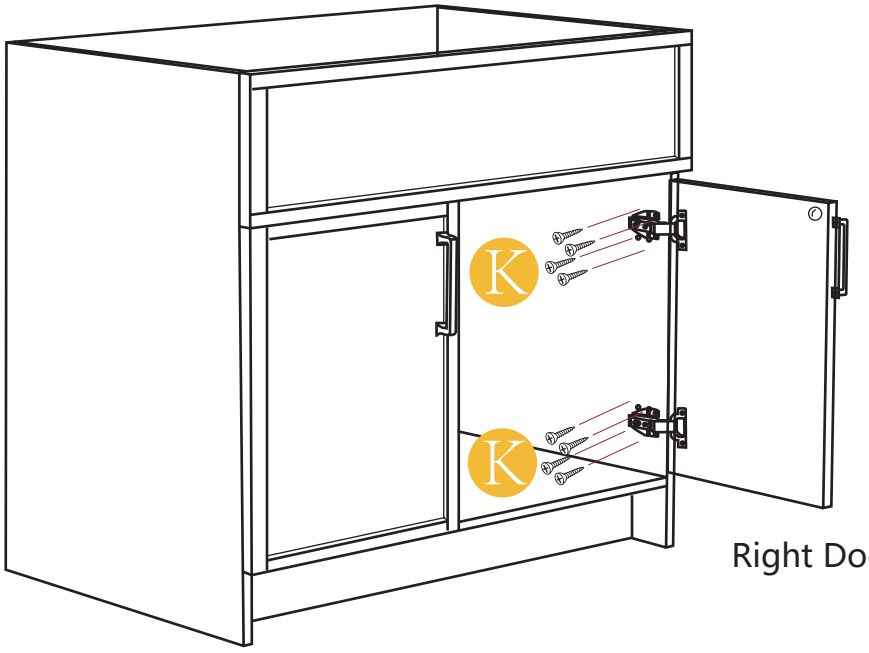

Right Door

STEP 12

Use a screwdriver to adjust the door panel.

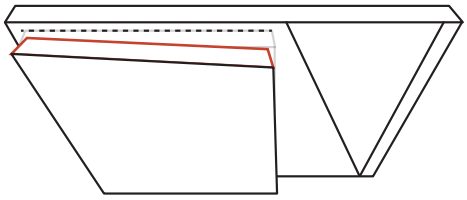

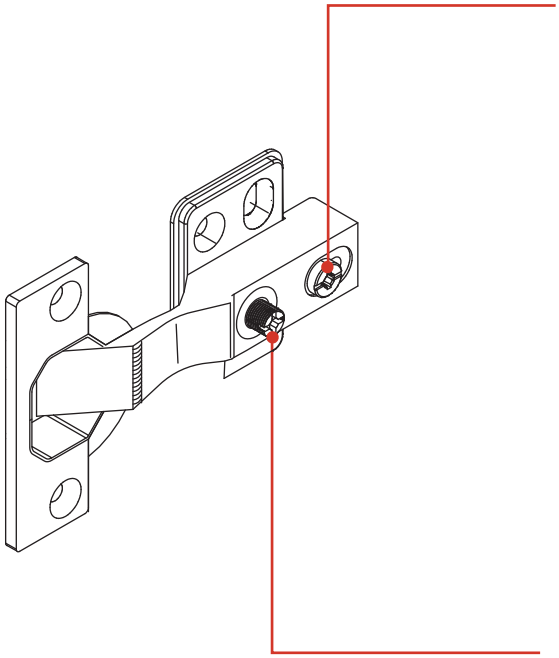

Loosen this screw and pull the hinge back and forth to adjust the door panel's front and rear tilt, ultimately achieving snug-fitting baffle effect.

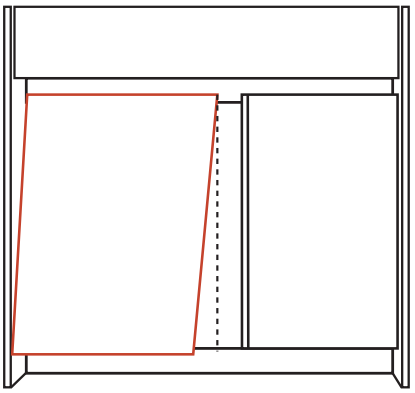

Turning this screw, the door panel can be adjusted to tilt left and right, eventually achieving vertical effect.

STEP 13

Refer to the illustration.
After the installation of the cabinet is completed, place the rubber cushion (F) on the component (3).

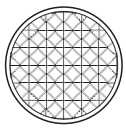

F x4

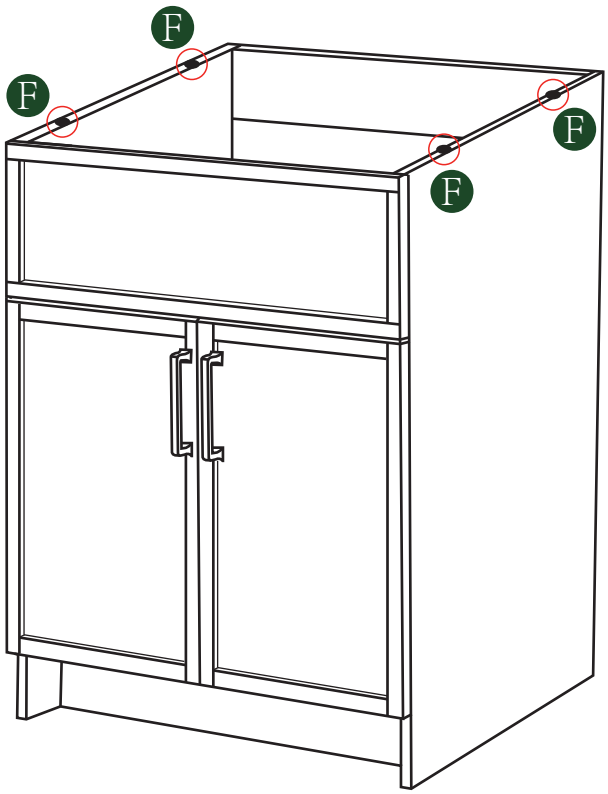

STEP 14

If necessary, follow the illustration to fix the vanity cabinet to the wall.

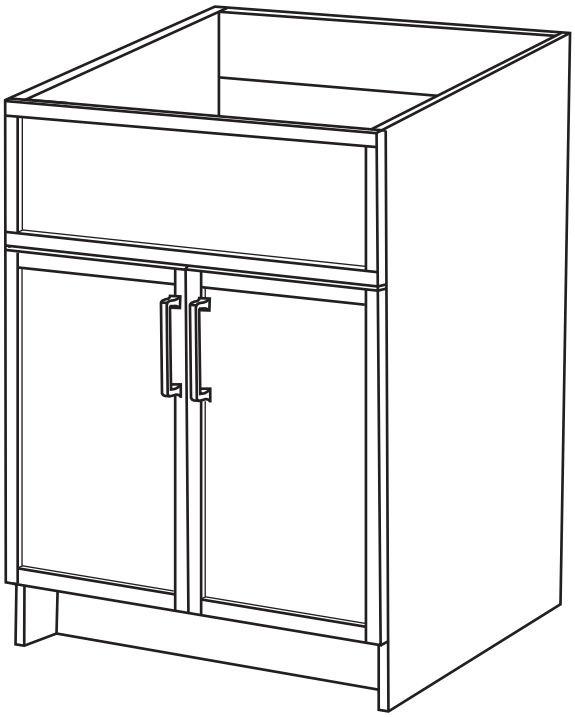

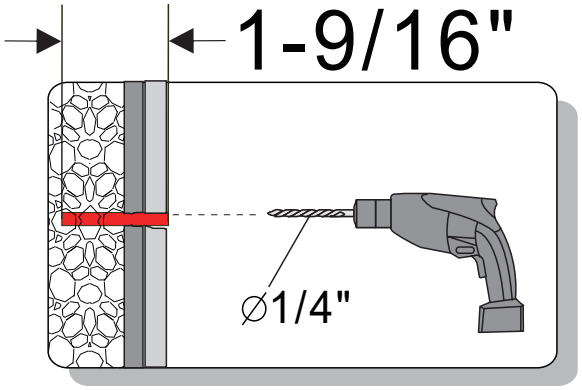

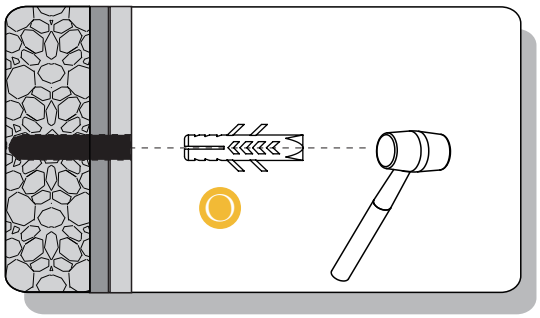

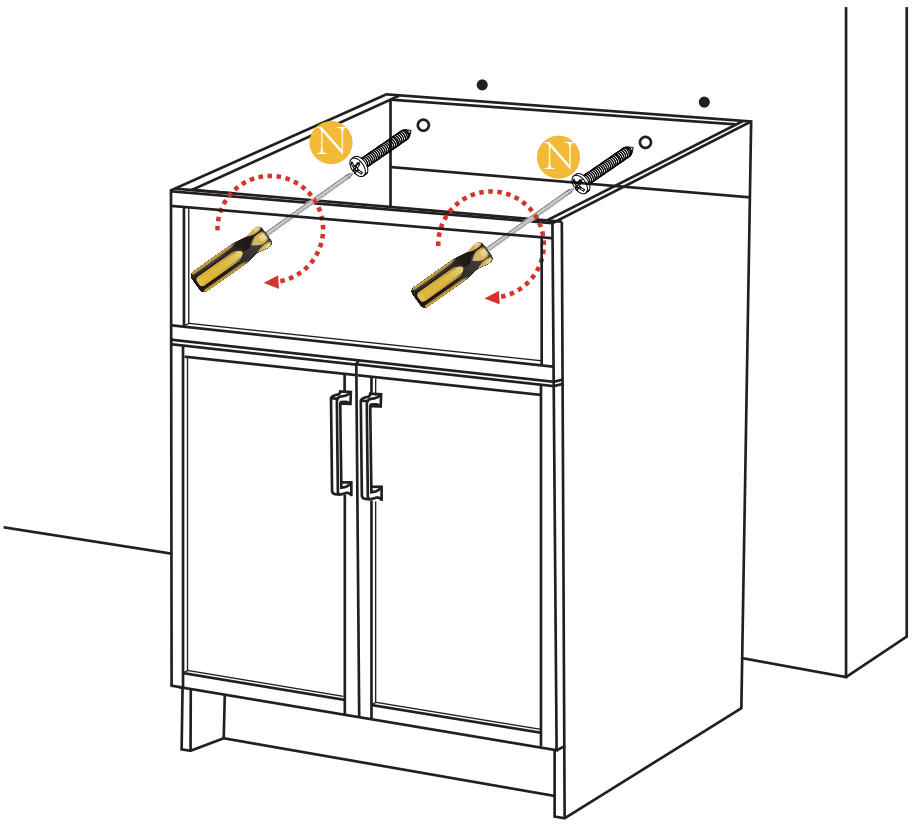

Congratulations! Successfully completed assembly

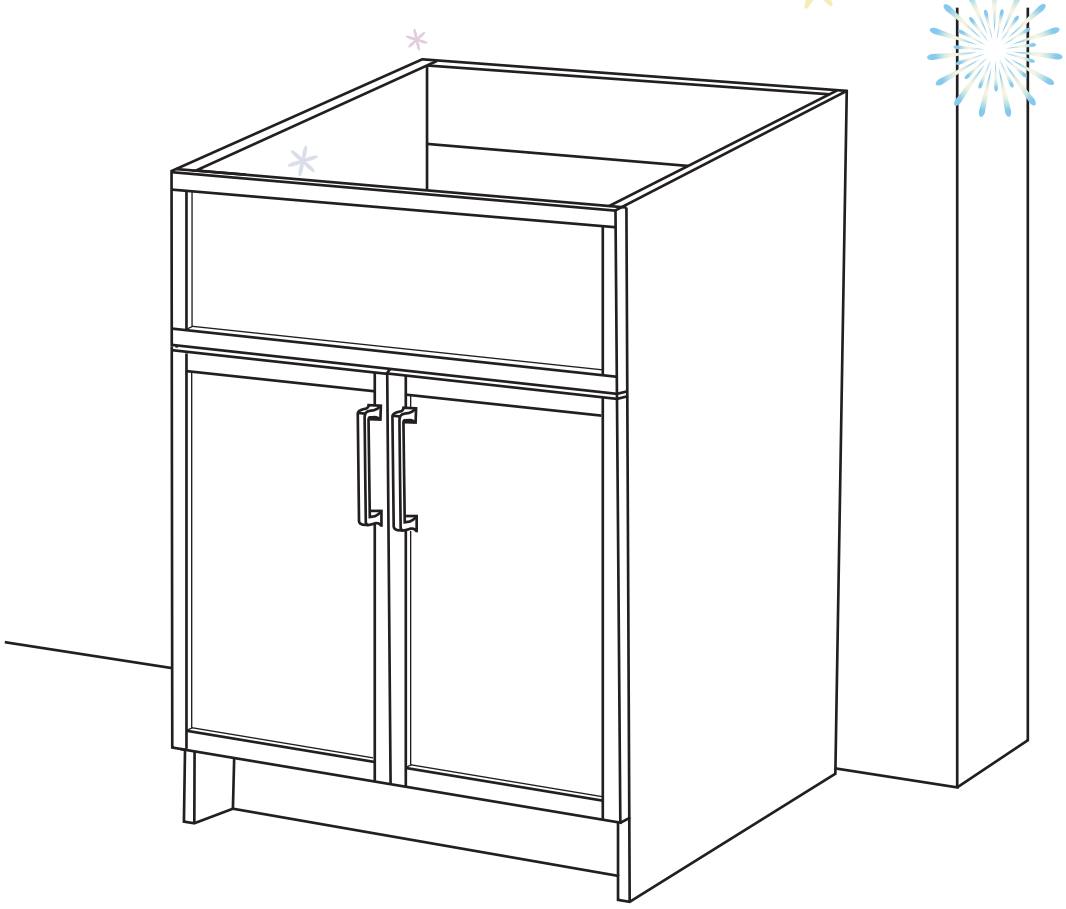

LIMITED WARRANTY COVERAGE

1 YEARS LIMITED WARRANTY

The products are made with quality materials and excellent craftsmanship to provide the customers a long-lasting product. In the case of any defects in materials or craftsmanship under regular use were inspected in the first one year of delivery, we will provide replacement parts at no charge, or at its option, replace any product or part of the product that is deemed defective, under normal installation, use, service and maintenance. This warranty applies only to the original purchaser. Proof of purchase will be required in the case of a claim.

We will, as its option

(1) Repair or replace the defective part(s) or product(s) at no charge;
(2) Issue a refund of the original purchase price of the product(s) (Valid within 30 days from the date of delivery);
(3) Issue a credit to be applied toward the purchase of a new the product shipping/delivery charges may apply and are in our sole discretion.

We recommend the installations to be made by a licensed, professional plumber. We will not be held responsible for any damage or product failure due to improper installation, misuse, or failure to use a licensed professional. We are not responsible for any removal or installation cost.

This limited warranty shall not apply to goods that have been subject to accident, negligence, improper installation, product abuse, product misuse, or use of cleaners containing abrasives, alcohol or other organic solvents, whether performed by a contractor, service company, or yourself, are excluded from this warranty.

Our responsibility under this limited warranty is limited to only to replacement parts and no other costs.

We will not be responsible for labor charges and/or damage incurred by installation, repair, or replacement, nor for any indirect incidental or consequential damages, losses, injury, or costs of any nature relating to this product.

Except as provided by law, this limited warranty is instead of and excludes all other warranties, conditions, and guarantees, whether expressed or implied, statutory or otherwise, including without restriction those merchant ability of fitness for use.

RESPONSIBILITIES OF OTHERS

Inspecting the unit before installation is the responsibility of the installer or building contractor who acts on behalf of the user. They are responsible for ensuring the unit is free of defects or damage. Notices are placed on and in the unit and on the shipping carton advising the installer of this responsibility. In the event of a problem, the unit must not be installed.
We are not responsible for failures or damage that could have been discovered, repaired, or avoided by proper inspection and testing before installation.

Damage occurring in transit is the responsibility of the carrier. The user or installer MUST open the crate and inspect the unit for damage when it's delivered. If damage is discovered, it must be reported immediately to the seller and the carrier in writing, and an inspection requested. Failure of the carrier to respond should be reported to the seller and the carrier. Your freight claims should be filed promptly thereafter.

LIMITATIONS AND EXCLUSIONS

This warranty does not cover instances of negligence, misuse, abuse, improper installation, carelessness, accident, hard water or mineral deposits, exposure to corrosive materials, misapplication, damages caused by improper maintenance, alteration of the product, or failure to follow care or installation instructions enclosed with your product.
This warranty is void if the subject to alteration, or if repairs are attempted by anyone other than an authorized agent. This warranty does not extend to plumbing or components installed by dealers, installers or by any party other.

We will not be liable for loss of use of the inconvenience, or any other incidental or consequential costs, expenses, or damages. Please note that some states do not allow the exclusion or limitation of incidental damages.

DISCLAIMER

Except as expressly provided, there shall be no warranty or obligation, express or implied, oral or statutory. No dealer or other person has the authority to make any warranties or representations concerning or its products. In no event shall we be held responsible for any such warranties or representations.

WARRANTY SERVICE

NOTE: When requesting a warranty, be sure to have the following:

•Copy of original invoice
•Date of installation
•Description and pictures of the defect
•Model number or description of the model

To obtain warranty service and replacement parts, please contact Customer Service. We will determine whether to repair or replace your product, issue a refund, or issue a credit.

WARNING: Content may contain sharp and other possibly harmful pieces and may cause hazard to children and adults, we are not responsible in any way for personal damage.

CARE & MAINTENANCE

Additional Tips:

- **Keep the vanity away from direct sunlight, which can fade the finish.**
- **Avoid placing extremely hot or cold objects directly on the surface.**

Regular Cleaning

- **Daily Wipe-Down:** Use a soft, damp cloth to wipe the surface. Avoid abrasive materials that can scratch the wood.
- **Mild Cleaners:** Use a gentle soap mixed with water or a wood-specific cleaner. Avoid ammonia-based or bleach cleaners, as they can damage the finish.
- **Dry Thoroughly:** After cleaning, dry the surface with a soft, dry cloth to prevent water spots and moisture buildup.

Protecting the Wood

- **Sealant & Finish:** Ensure your vanity has a proper water-resistant sealant or finish. Reseal as recommended by the manufacturer, typically annually.
- **Avoid Excess Water:** Wipe spills immediately. Do not allow water to pool or sit on the surface, as prolonged exposure can warp or damage the wood.
- **Use Coasters & Mats:** Place coasters or mats under toiletries and soap dispensers to prevent water rings or stains.

Preventing Damage

- **Avoid Harsh Chemicals:** Do not use furniture polish with silicone or wax-based products that can build up over time.
- **Use Soft Cloths & Sponges:** Never use steel wool or abrasive scrubbers.
- **Handle with Care:** Be gentle when opening or closing drawers and doors to prevent loosening or damage.

Addressing Minor Issues

- **Scratches & Dents:** Use a wood touch-up pen or filler that matches your finish. For deeper scratches, consider professional refinishing.
- **Water Rings & Stains:** Lightly sand with fine grit sandpaper (around 400 grit) and reapply finish if necessary.

Maintaining Humidity Levels

- **Ideal Range:** Keep indoor humidity between 40-60%. Use a dehumidifier if necessary to prevent swelling or cracking.
- **Ventilation:** Ensure good ventilation in the bathroom to reduce excess moisture buildup.

Long-Term Care

- **Periodic Polishing:** Use a high-quality wood polish periodically to restore shine and provide an additional protective layer.
- **Professional Refinishing:** When the finish becomes worn or damaged, consider professional refinishing to restore your vanity's appearance.