Expandable Outdoor Dining Table

READ & SAVE BELOW INSTRUCTIONS BEFORE ASSEMBLY

1. PLEASE SEPARATE AND IDENTIFY ALL PARTS,MAKING SURE THAT YOU HAVE ALL OF THE PARTS LISTED.

2. TO AVOID ANY SCRATCH DURING ASSEMBLY, PLEASE ASSEMBLE ON A SOFT MAT OR SIMILAR.

3. PLEASE ASSEMBLE STEP BY STEP AND FOLLOW THE INSTRUCTIONS.

4. WASHERS MUST BE USED.

5. WHILE EACH SCREW AND NUT IS PROPERLY FASTENED, DO NOT OVER FASTEN IT.

A

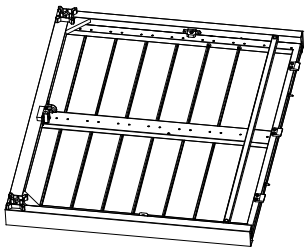

1X

B

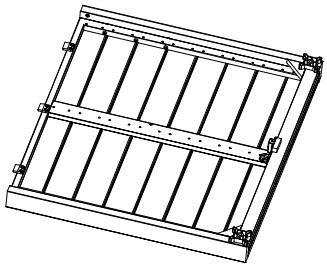

1X

C

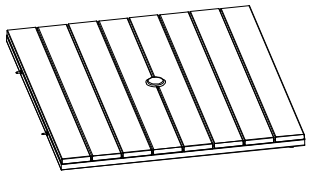

1X

D

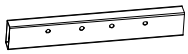

2X

E

4X

F

4X

G

M6*12 8X

H

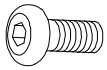

M6*15 4X

I

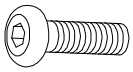

M6*20 2X

J

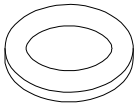

8X

K

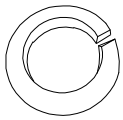

8X

L

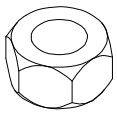

8X

M

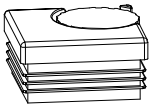

4X

N

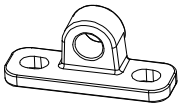

2X

O

2X

P

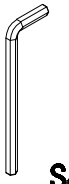

S4

1X

R

S5

1X

S

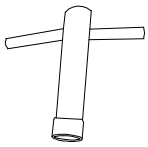

1X

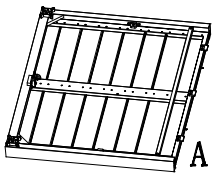

A 1X

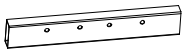

D 2X

G 4X

R S5 1X

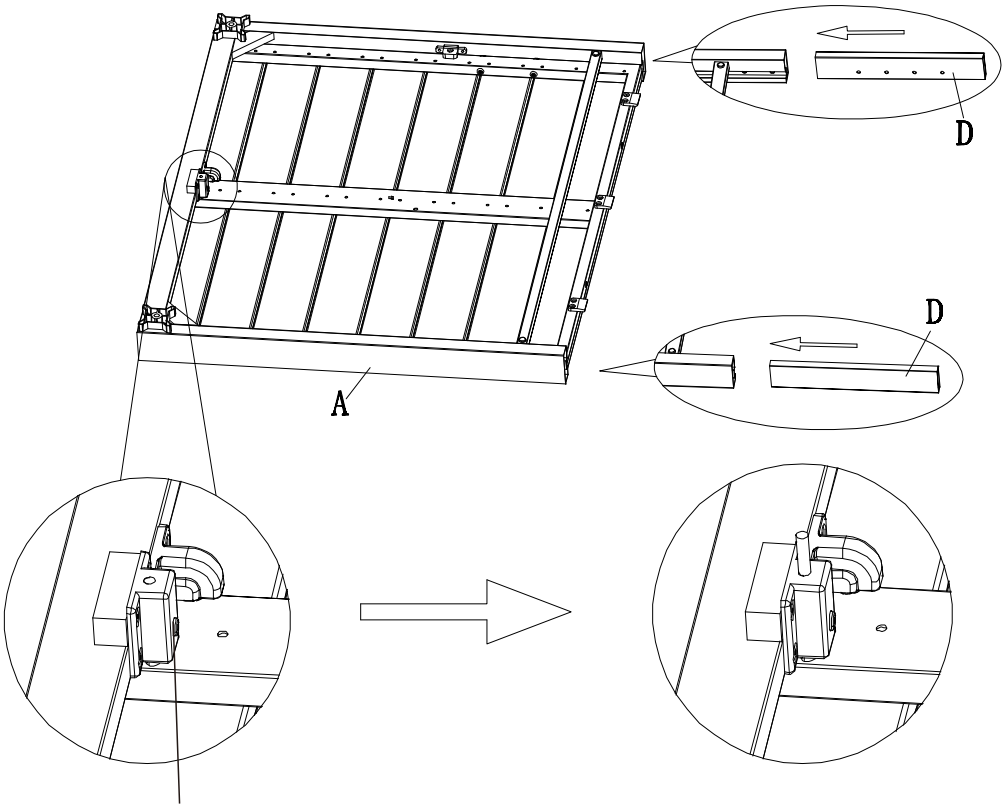

Press the button

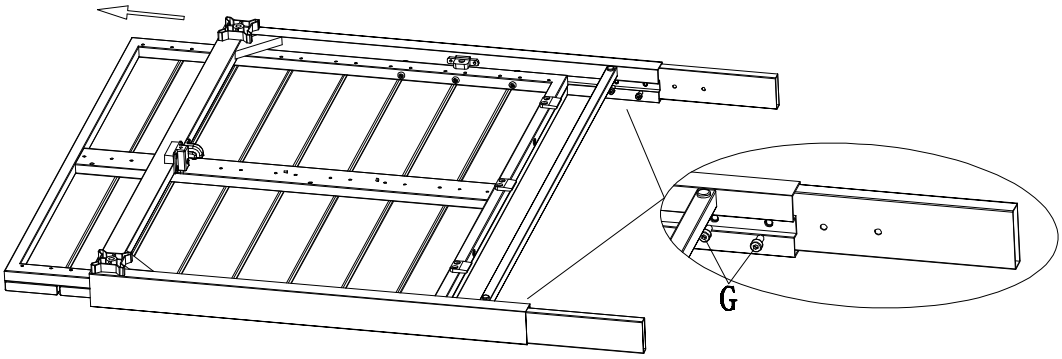

(1) Press the button to open the safety latch on the left side of #A and install #D into each side of #A.
(2) Push #A to the left and secure it with 2 bolts #G at the holes as shown.

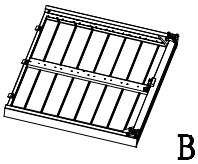

B 1X

G 4X

R S5 1X

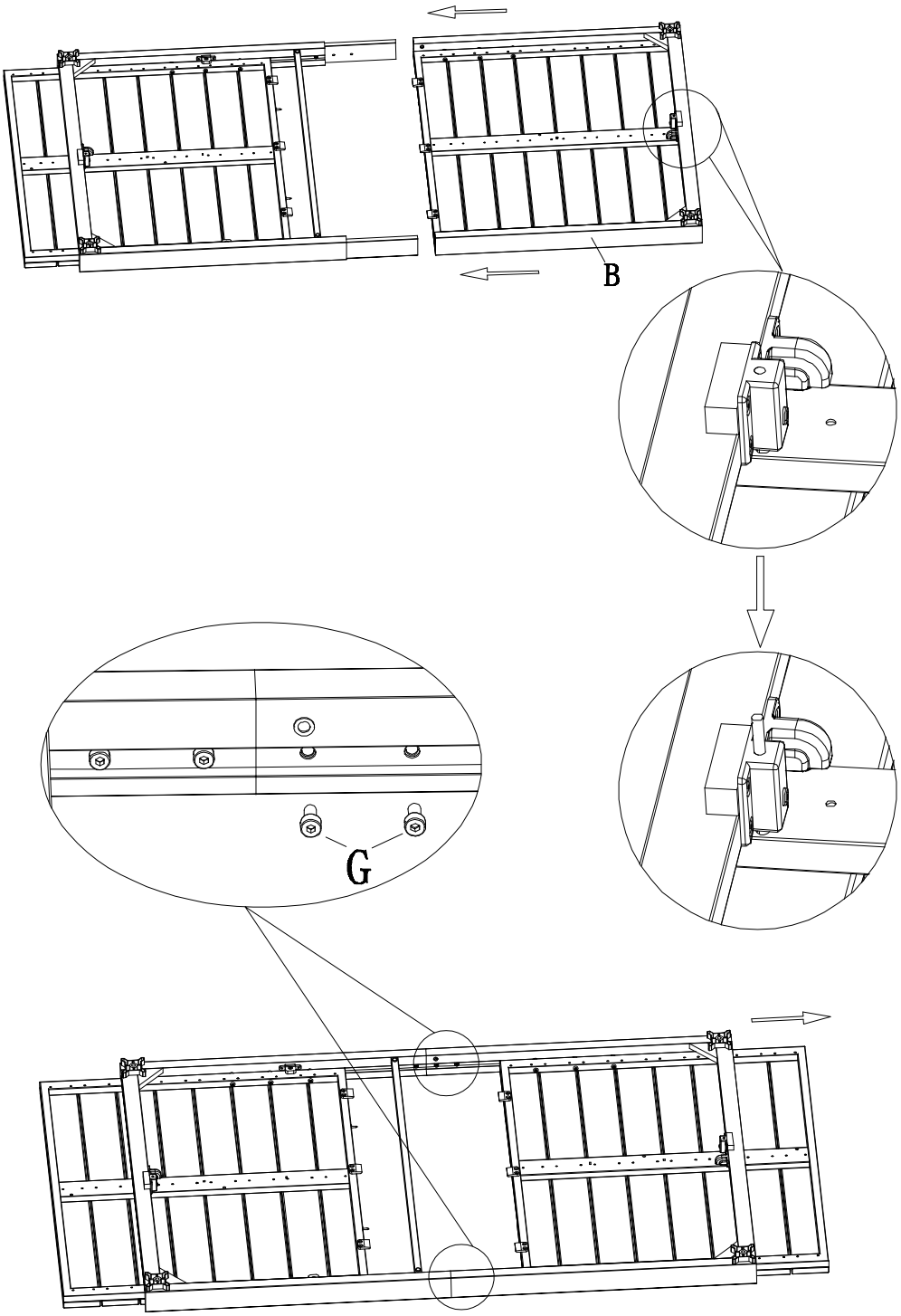

(1) Press the button to open the safety latch on the right side of #B and insert #B into #D.
(2) Push #B to the right and secure it with 2 bolts #G at the holes as shown.

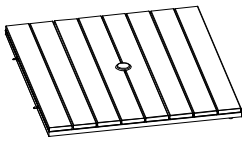

C 1X

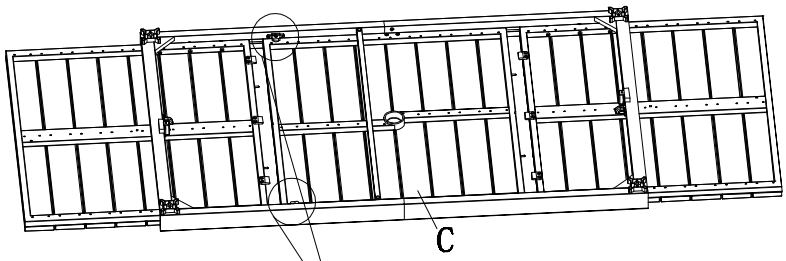

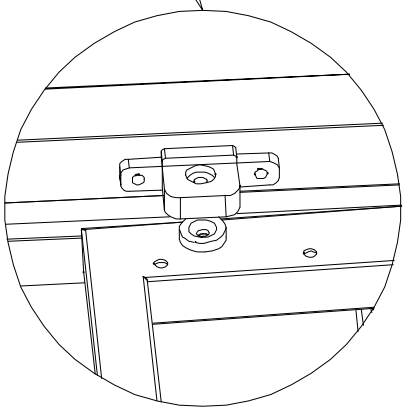

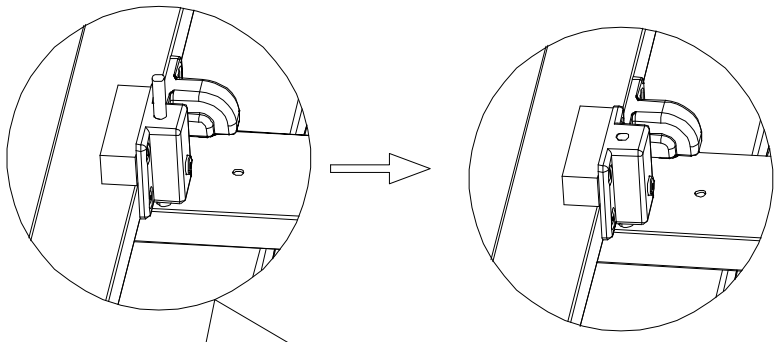

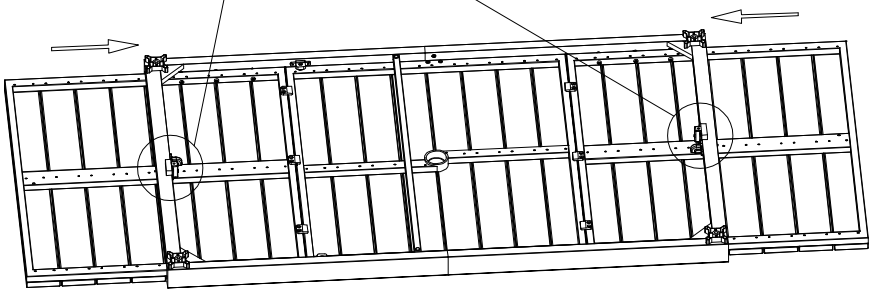

(1) Place the rotatable tabletop #C as shown.
(2) Align the magnet on the rotatable tabletop #C with the magnet on the table frame. Then push the desktop panels on both sides to the middle and make sure there is no gaps between each tabletop panel.
(3) Press the locks on both sides to fix the tabletop.

N 2X	
O 2X	
H 4X M6*15	
I 2X M6*20	
P S4 1X	

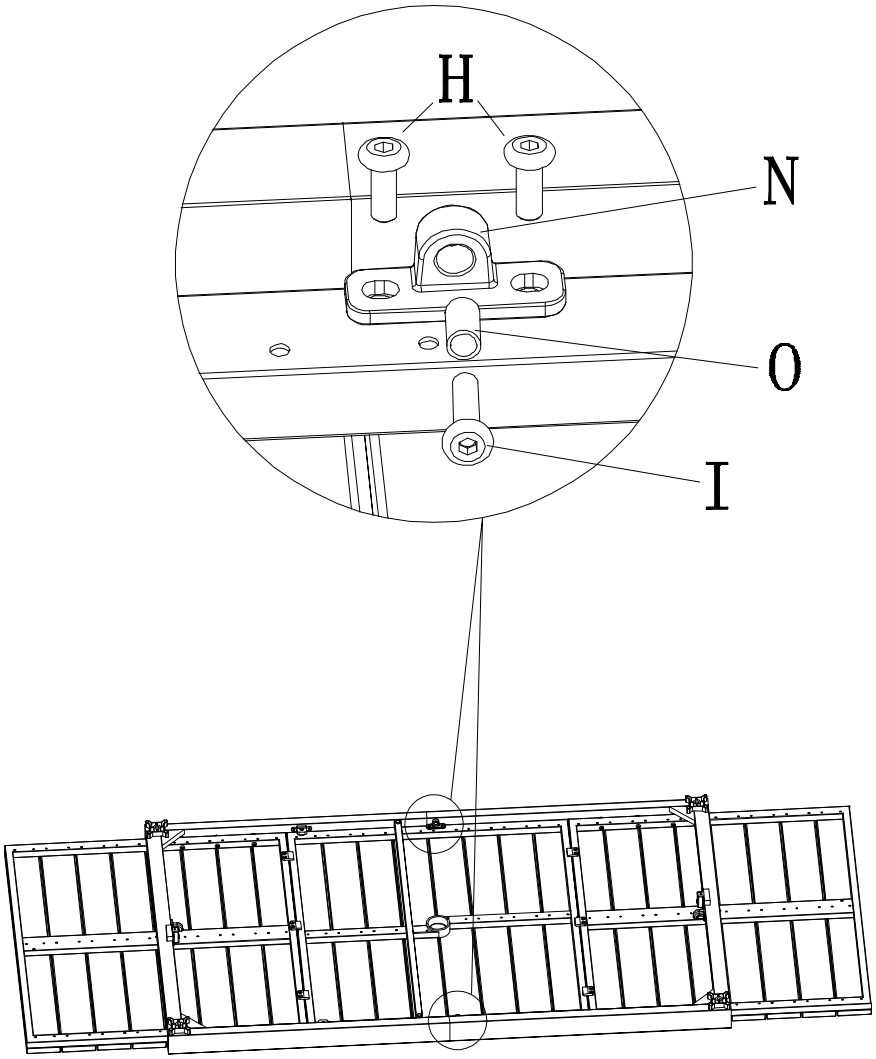

Use 2 bolts #H to secure #N in the position shown, and insert #I, #O through #N to fix the tabletop #C to the table frame.

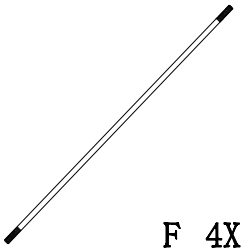

F 4X

J 4X

K 4X

L 4X

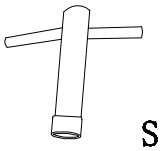

S 1X

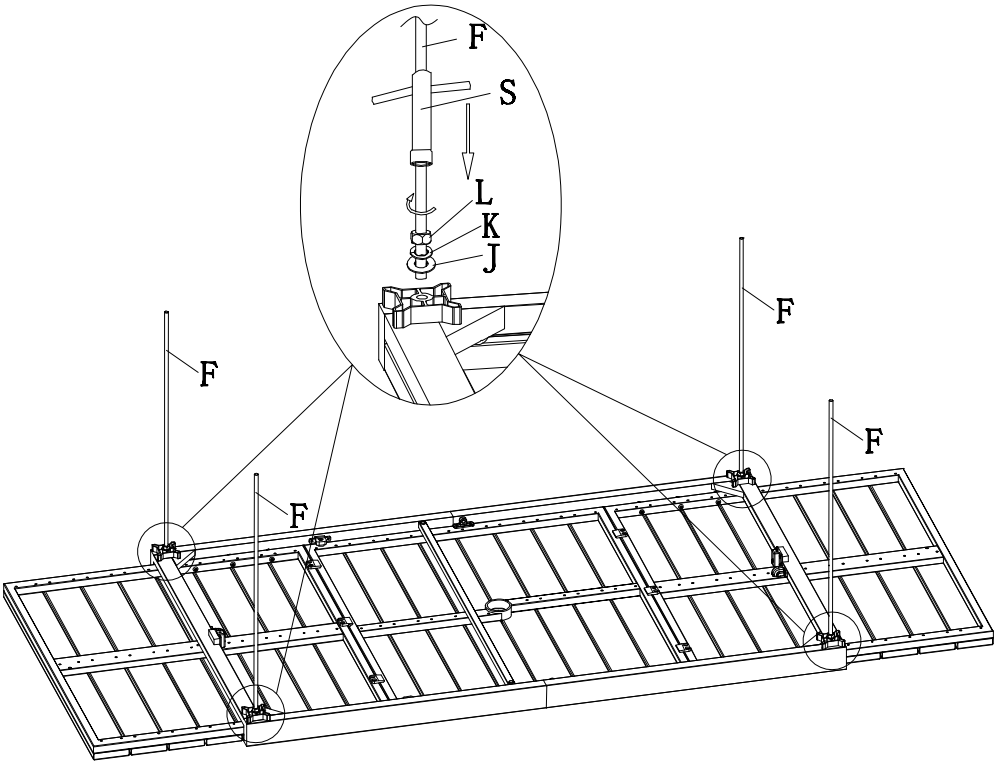

(1) Insert washers #J, spring washers #K, and nuts #L into parts #F as shown. Align #F with the hole position, twist it by hand until it cannot be turned, and tighten parts #F with wrench #S.

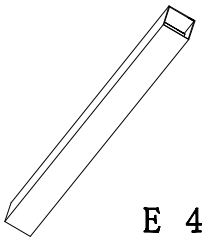

E 4X

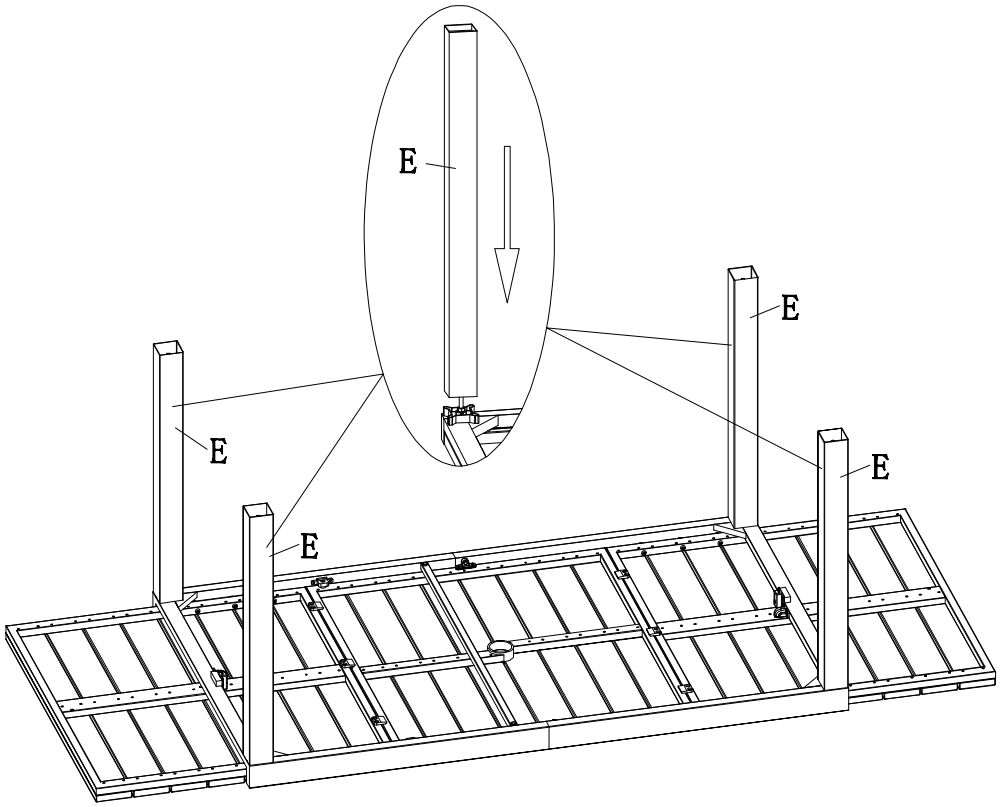

(2) Set table legs #E into parts #F.

J 4X

K 4X

L 4X

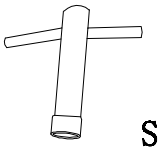

S 1X

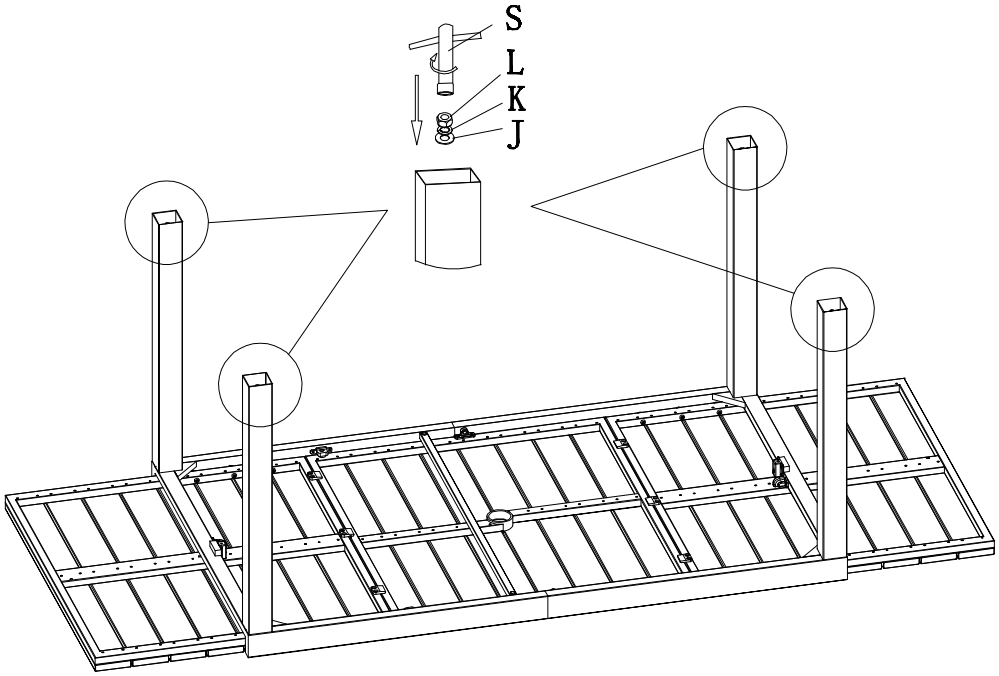

(1) Install the washers #J, spring washers #K, and nuts #L on #F. Tighten them with wrench #S. (The remaining legs #E follow the same steps as above.)

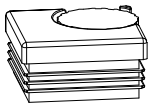

M 4X

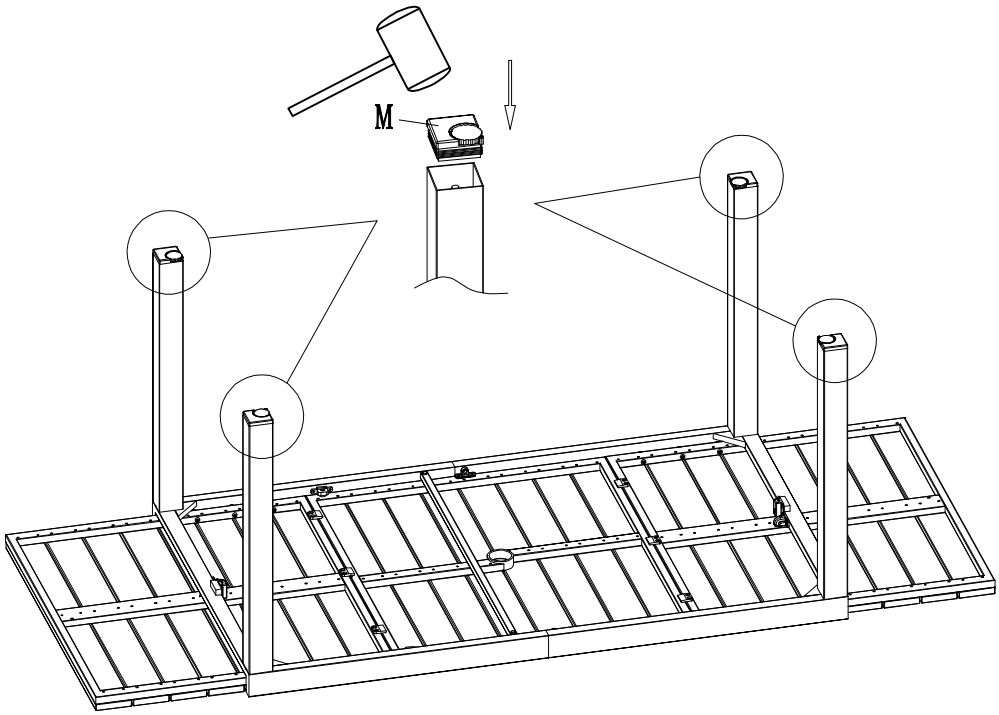

(2) Insert foot pads #M into table legs #E and press them with a hammer.

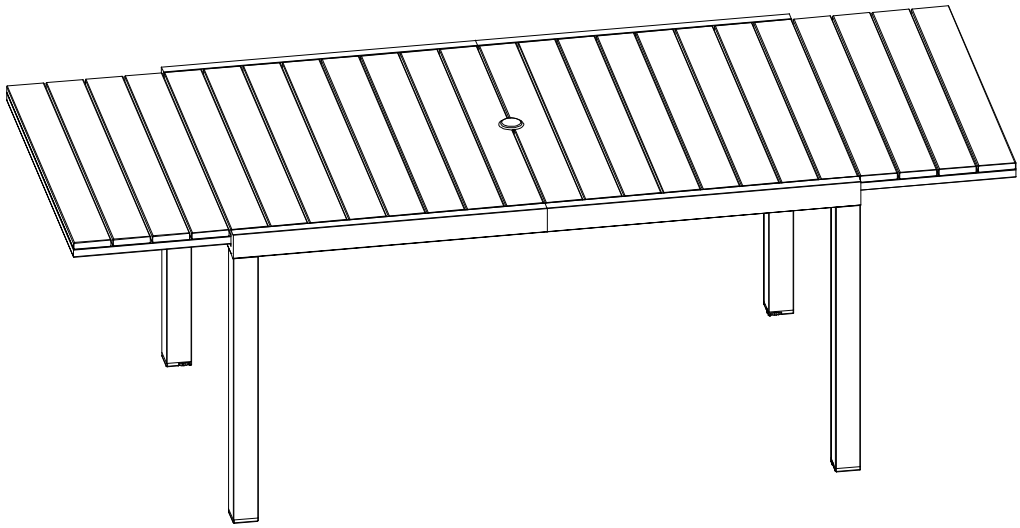

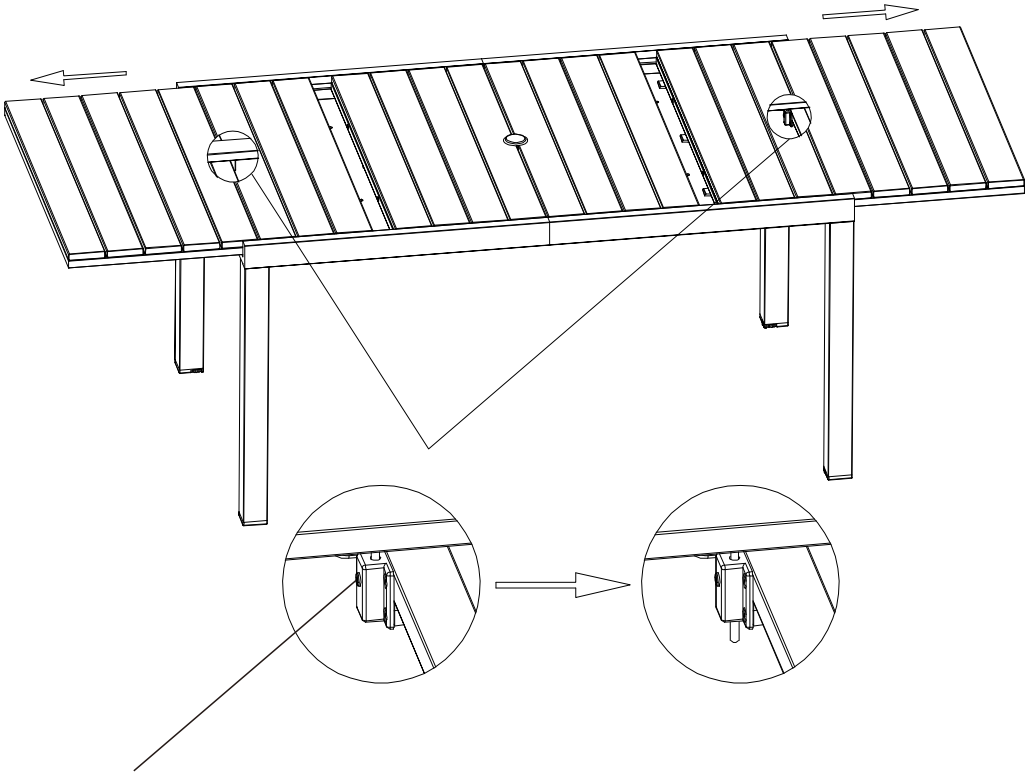

Open the fixed locks on both sides, and slide the tabletop to both sides.

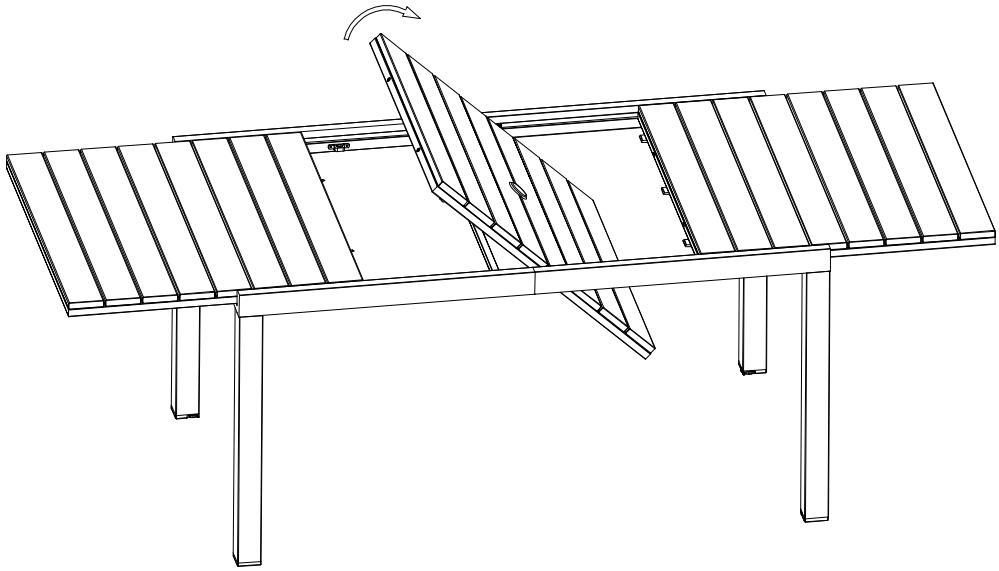

(1) Rotate the centre table panel #C as shown.

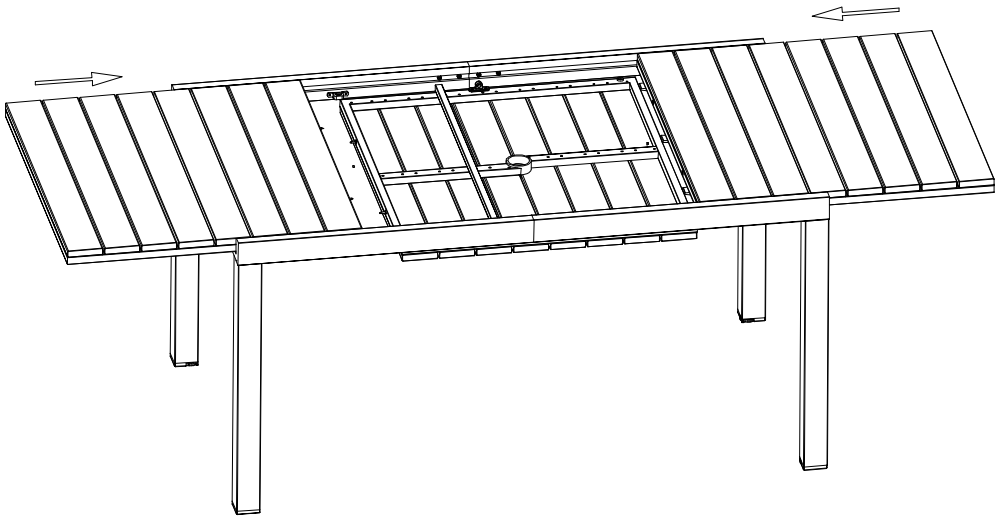

(2) Slide the side table panels towards the center.

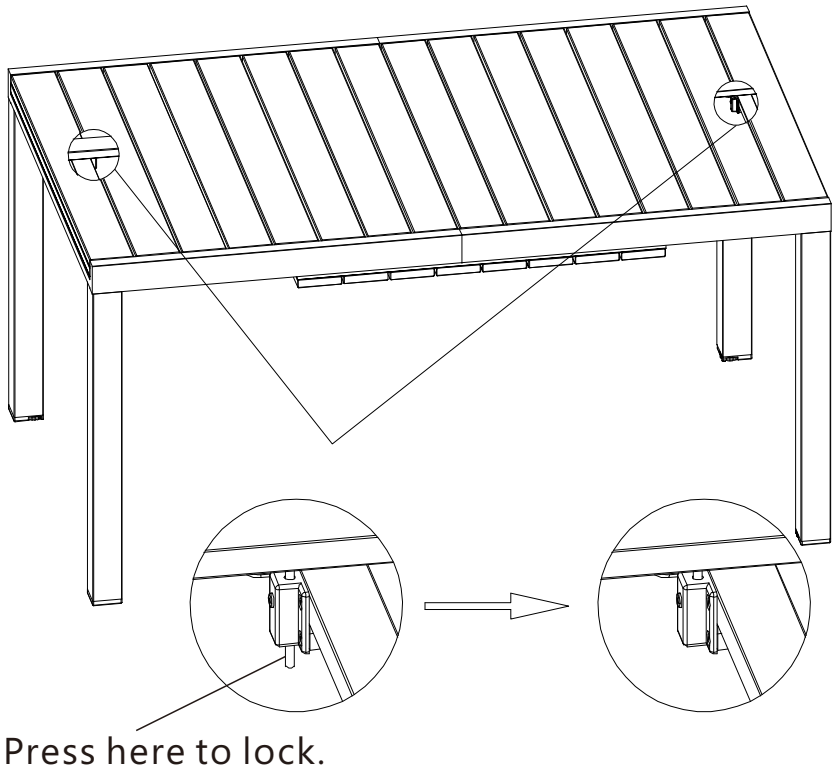

Lock the two fixed locks on both sides as shown.

Thanks for your purchase.

At domi outdoor living, we believe in our products. That’s why we provide a 12-month warranty and friendly, casy-to-reach after-sales service. So if you have any questions about our product and assembly-,please feel free to contact us. We will be here for you.

Please tell us your order ID when contact.

Attach photos of damaged part for instant reply.