TEAR SHEET

Simple Scallop Large Hanging Shade

Item # BBL 5015SB-L

Designer: Barbara Barry



Height: 21"
Width: 25"
Canopy: 8.25" Round
Finishes: BZ, SB, SS
Shade Treatments: L
Shade Details: 22" x 25" x 17.5"
Socket: 5 - E12 Candelabra
Wattage: 5 - 60 B11
Weight: 16 Pounds

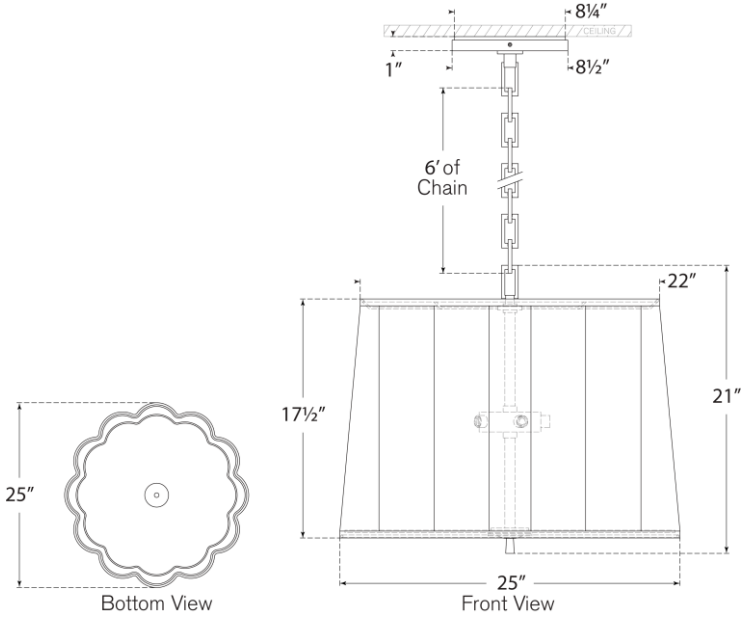

VISUAL COMFORT & CO.