# Dining Chair

## ASSEMBLY INSTRUCTIONS

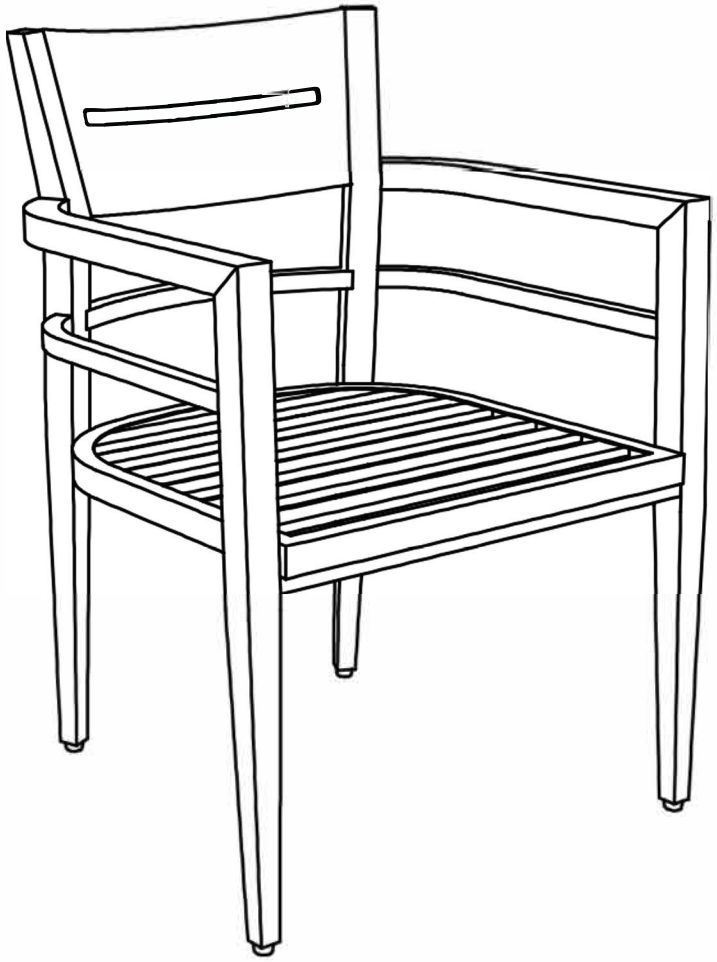

## BEFORE ASSEMBLY:

• Please read these instructions carefully before starting assembly. We suggest you carry out the assembly on a soft surface like a carpet, so as to avoid scratching the paint. Keep children away during assembly. This item contains small parts which can be swallowed by children.

• This product was made for the explicit purpose of providing outdoor function and is not to be used as a toy. This product is for residential use only. This product is NOT intended for commercial use; unintended use will void the warranty.

• This product is not intended for use during inclement or severe weather, that includes but is not limited to rain, hail, sleet, snow, wind, freezing conditions and extreme heat.

• Please note because of the nature of cast metal, you may find roughness on the surface which enhances the beauty of the product and is not a defect.

• Aluminum is soft metal, please do not use power tools, and over tighten may strip threads or break the parts.

• When not in use, store and/or cover the product in a cool dry location. Do not locate the product near any sort of high heat. Do not use the product as a support.

• Children under the age of 10, who are near the product, should be supervised by a competent adult at all times.

• Do not discard any of packaging until you finish the assembly. Keep the assembly instructions for future reference or warranty.

| | | |
|---|---|---|
| A×4  Chair | B×4  Seat | C×8  Bolt(M6×20) |
| D×8  Bolt(M6×30) | E×16  Washer(M6) | F×16 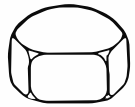 Bolt cap(M6) |
| G×16  Lock Washer | H×4 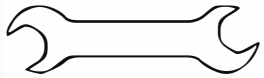 Wrench | I×4 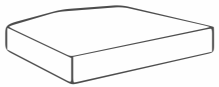 Cushion |

# 1

**Step 1:** Place all the parts on a clean and soft surface, identify all the parts and hardware kits against parts list. Assemble front Legs and **Seat(B)** with parts**(E,G,D,F)**.Assemble back Legs and **Seat(B)** with parts**(E,G,C,F)**. Remember not to tighten all the bolts before they are all set up.

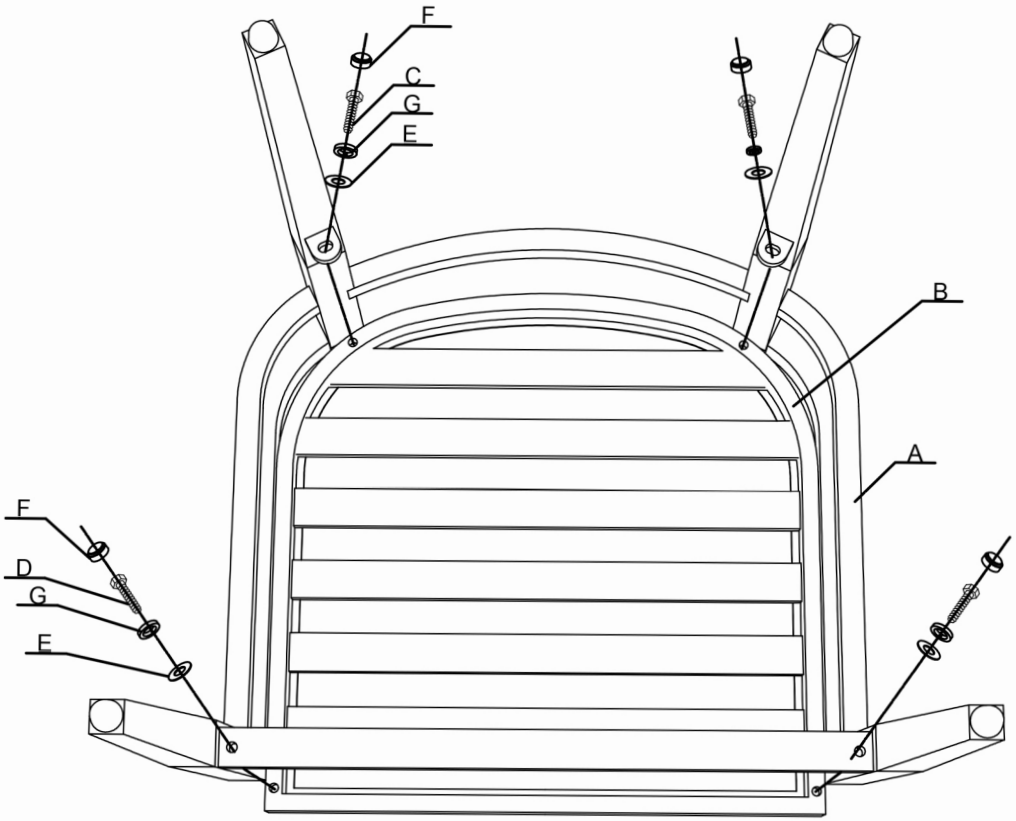


# 2

**Step 2:** Tighten all the bolts with **Wrench(H)**. Do not over tighten bolts, it will cause the damage of product without warranty. Then tight the cushion on the chair. Your chair should be ready for use.

