Assembly Instructions

DAYBED

CAUTION: You must read this before you proceed

Please look in the Seat Panel for hardware packs

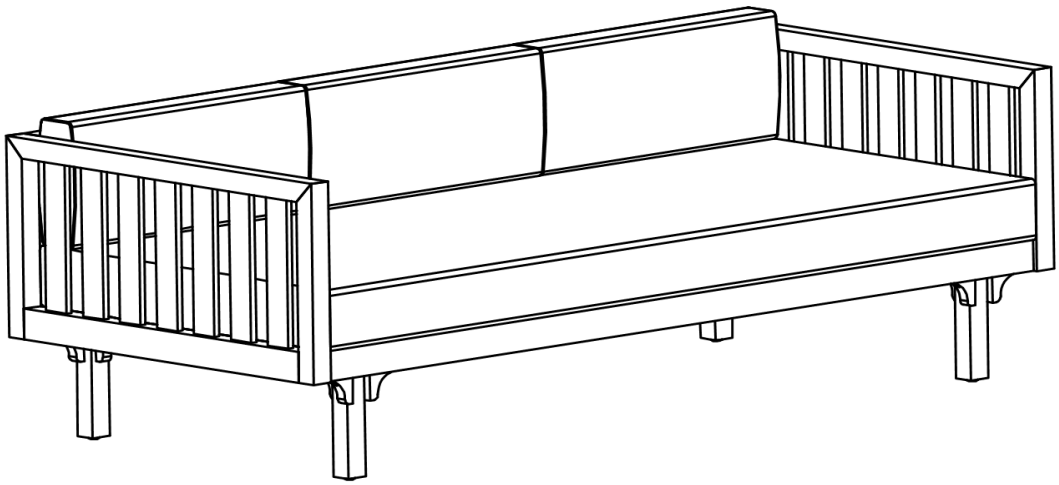

CAUTION: This Daybed is NOT a TOY.
Keep your child / children at bay in the process of assembly.
For turning the Daybed and to prevent damage to the Daybed, 02 persons may be needed to execute this action.

Parts List

Label	Picture	Description	Qty
A	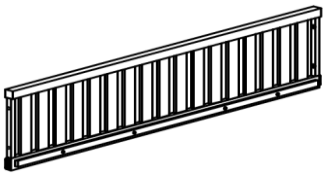	Backrest Panel	**1**
B	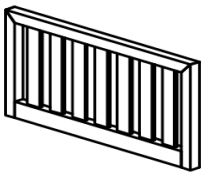	Left Panel	**1**
C	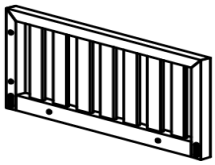	Right Panel	**1**
D	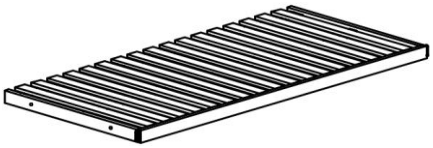	Seat Panel	**1**
E		Leg	**4**
F		Back Cushion	**3**
G	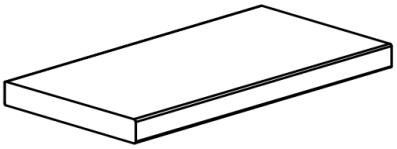	Seat Cushion	**1**
H	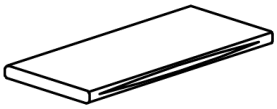	Back Cushion Cover	**3**

Hardware

Label	Picture	Description	Qty
①	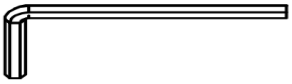	Allen Wrench	2
②		Screw (M6*45mm)	17
③		Bolt (M6*40mm)	9

Assembly Preparation

Before Beginning Assembly:

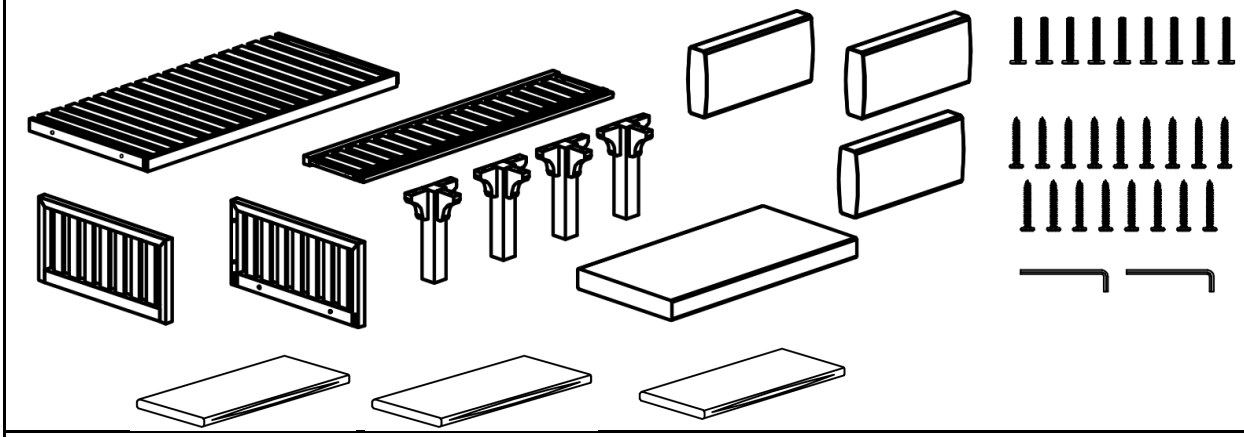

- **Read instruction, cover to cover-**
- **Have 2 adults on hand for assembly-**
- **Do not assembly on flooring or carpet-**
- **Assemble on a clena non- marring surface (packing foam)-**
- **Save all packaging until finished-**

Assembly Steps

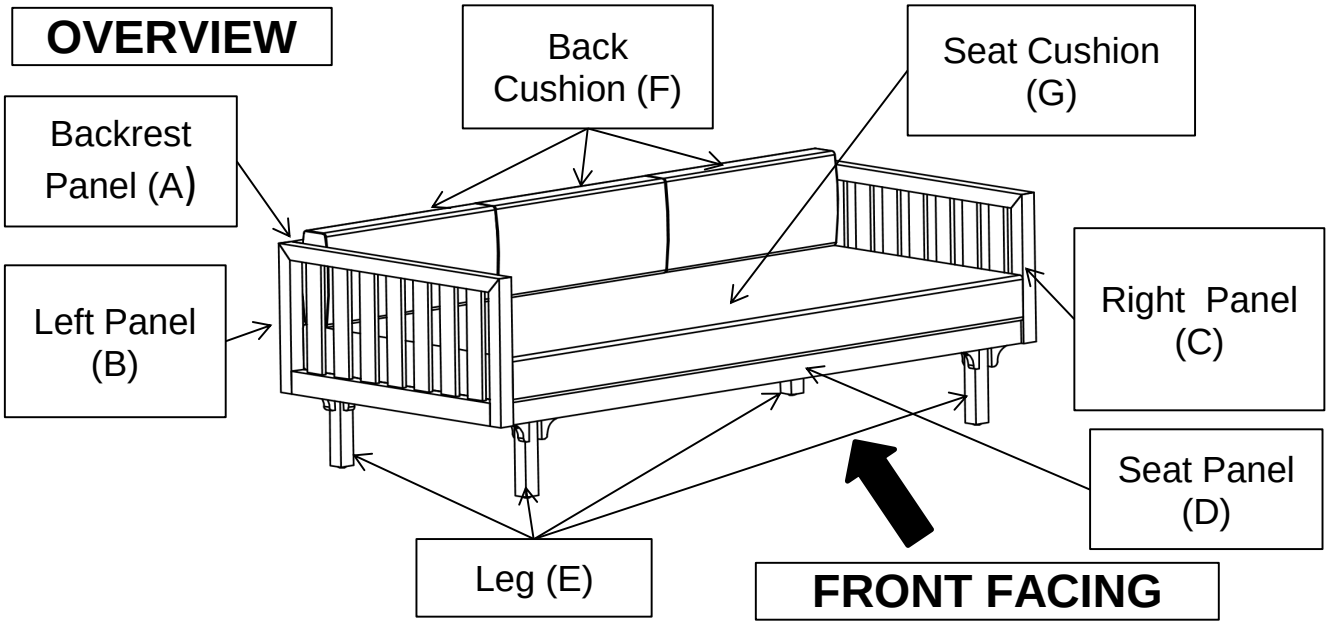

This Daybed has multiple parts and may require up to some 30 minutes to assemble. To give you an overview of the Daybed, the above picture is to help you put the various parts into perspective. Please read through the instructions here below to familiarise the parts and steps before assembly.

Step 1

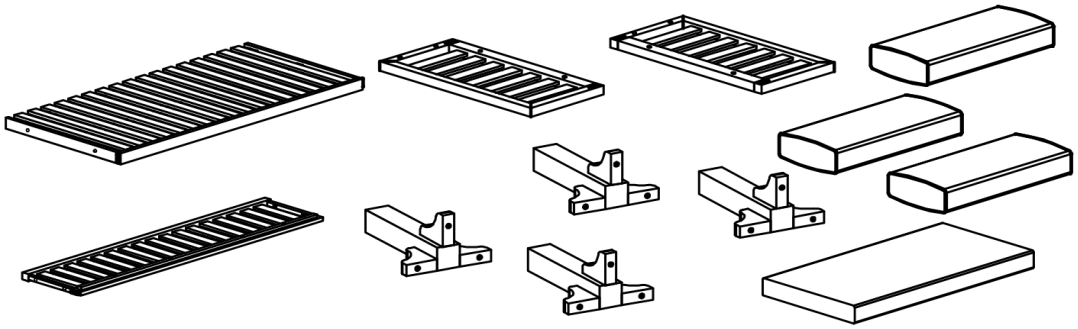

Unpack and place all parts on a clean, non-marring surface.

Step 2

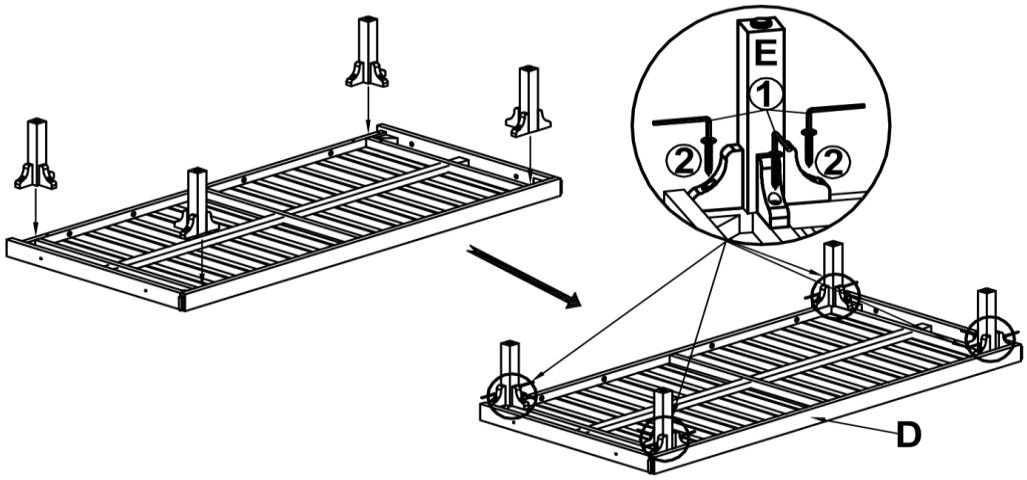

With assistance from your adult partners, place Seat Panel (D) facedown onto a clean, non-marring surface.
Attach Leg (E) to Seat Panel (D) by using 3 Screws (②) with Allen Wrench(①).
Do not fully tighten Screws.
Repeat the same step with the remaining three Legs (E).

Step 3

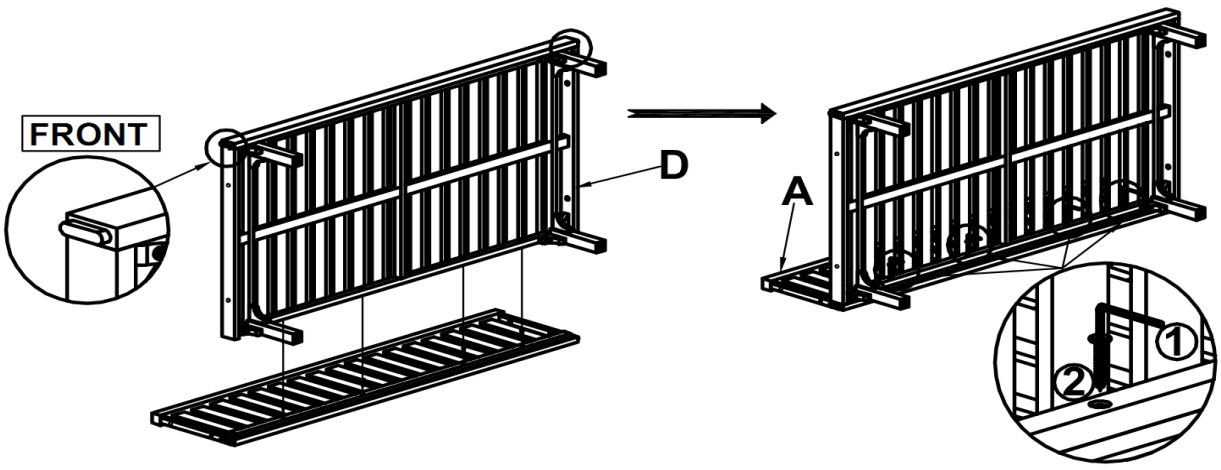

With assistance from your adult partners, position the back side of Seat Panel (D) to the Backrest Panel (A) as shown in the above picture.
Attach the Seat Panel (D) to the Backrest Panel (A) using 4 Screws (②) with Allen Wrench (①).
Do not fully tighten Screws.

Step 4

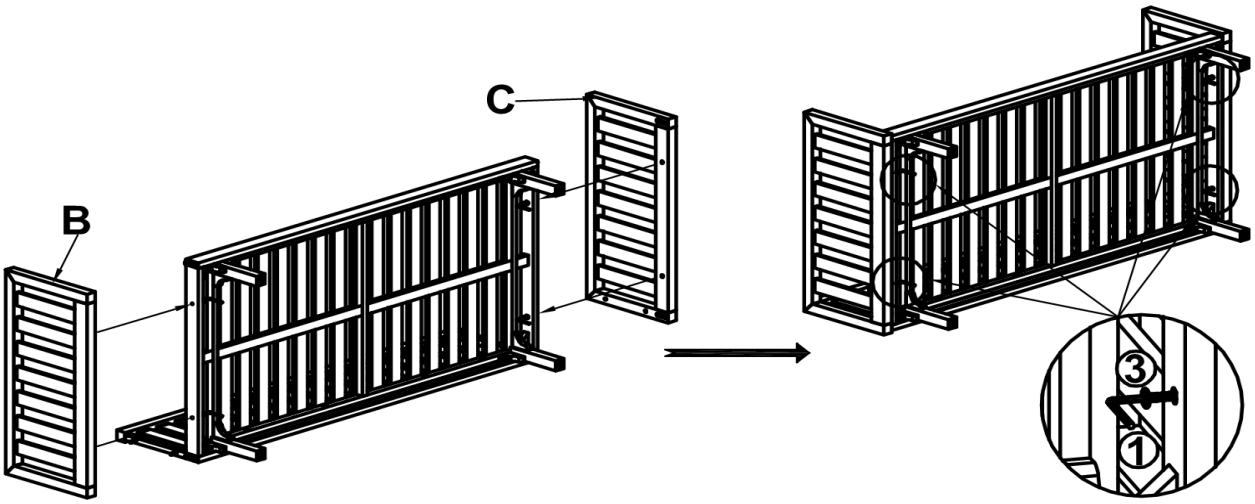

With assistance from your adult partners, position the Left Panel (B) and the Right Panel (C) to the assembled parts in step 3 as shown above.
Then secure the Left Panel (B) and the Right Panel (C) to this assembled parts by using Bolts (③) with Allen Wrench (①).
Do not fully tighten Bolts.

Step 5

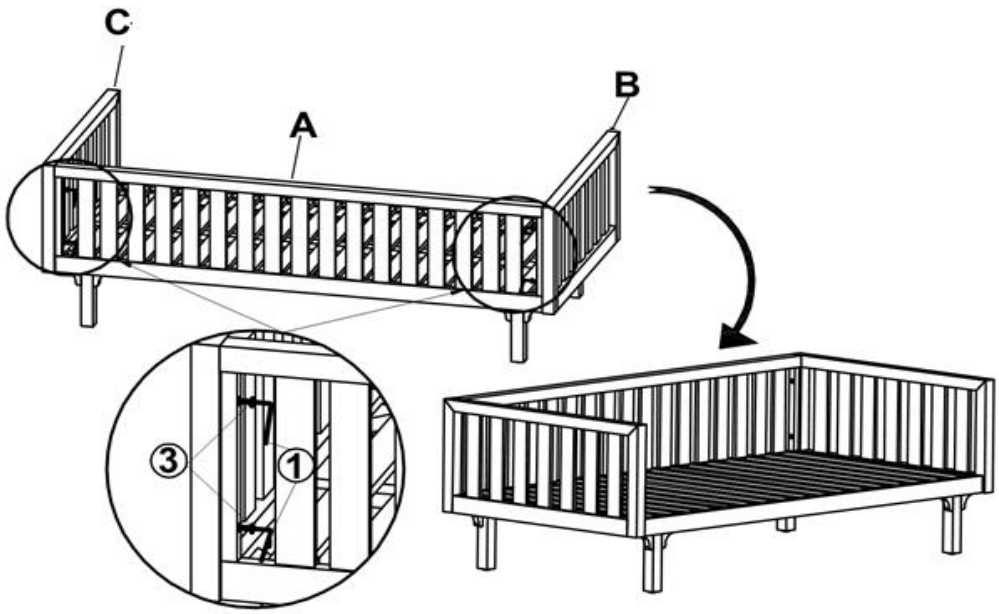

With assistance from your adult partners, stand the assembled parts in step 4 up.
Attach the Backrest Panel (A) to the Left Panel (B) and the Right Panel (C) by using 4 Botls (③) with Allen Wrench (①).
Do not fully tighten Bolts.

Step 6

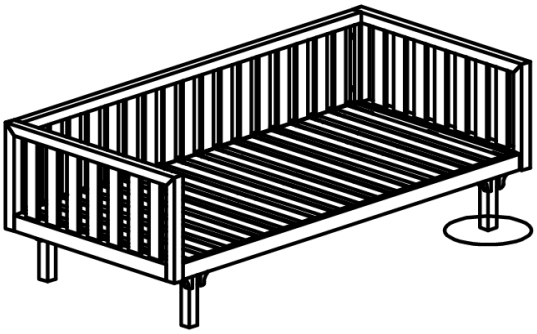

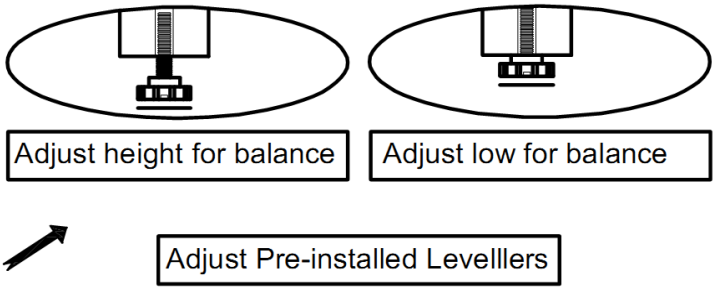

Inspect the Daybed and make sure all parts are connected.
Gently and Gracefully, sit onto to the Daybed.
This pressure will help to align all the parts at all the joint areas.
Then get off the Daybed, and in a sequential manner, proceed to tighten all Bolts and Screws.
Whenever moving or lifting the Daybed be sure to secure assistance from your adult partner(s).
When tightening the Bolts and Screws, tighten sequentially.
DO NOT tighten any Bolt or Screw fully and then move on towards the next one.
With assistance from your adult partners, adjust the Levellers to desired height to avoid wobbles.

Step 7

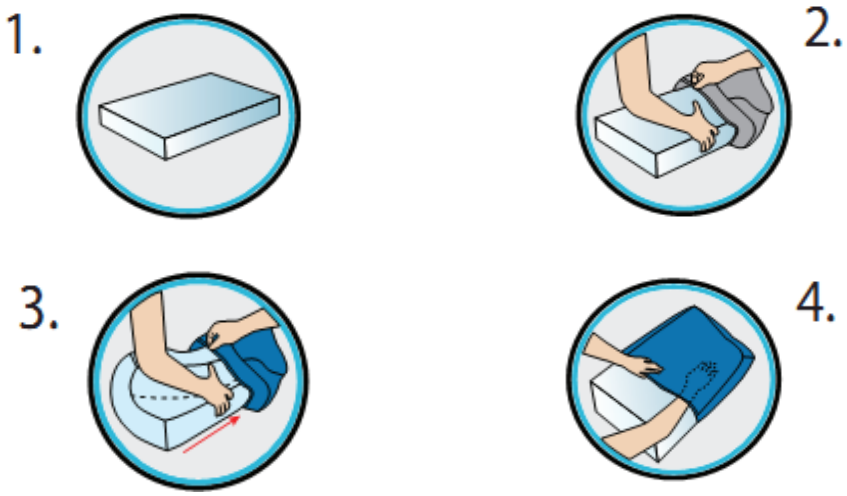

7.1 Remove plastic bag to decompress white foam Back Cushion (F).
7.2 Unzip Back Cushion Cover (H).
7.3 Insert Back Cushion (F) into matchingBack Cushion Cover (H)
7.4 Adjust/smooth out cover and cushion before zipping pillow closed.

Step 8

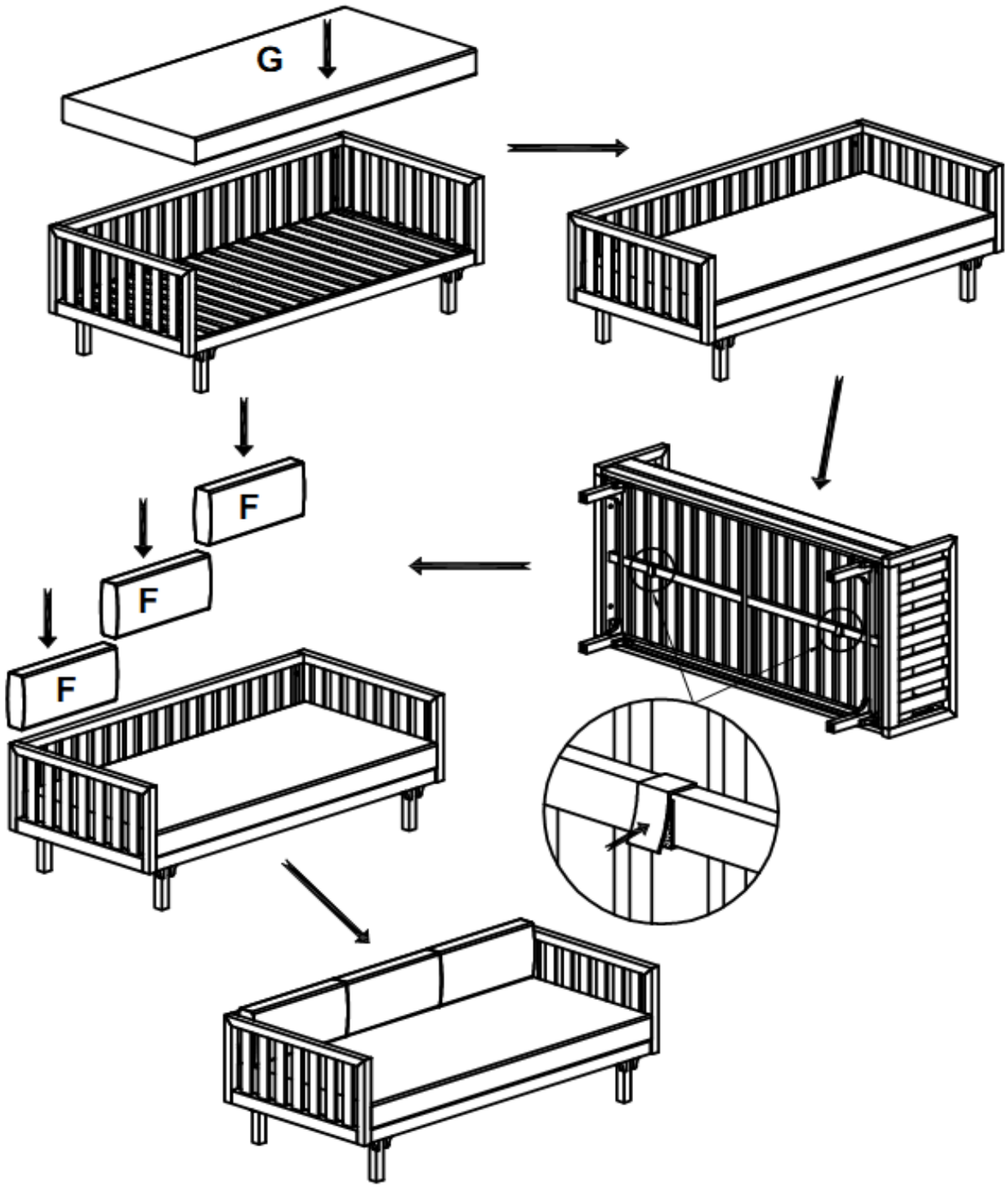

Place Seat Cushion (G) and Back Cushion (F) onto the Daybed.
Tie the magic tape straps of Seat Cushion (G) and Back Cushion (F) and to the slats of Seat Panel (D) and Backrest Panel (A) as shown above.
Your Daybed is ready to use.
This Daybed can only be used on a flat, level surface.

Care & Maintenance

- ⊘  Do not put hot items directly on furniture surface
- ⊘  Do not clean furniture with harsh cleansers or polish.
- ✓  To obtain the longest lifespan of your outdoor prodcts,minimizing exposure to direct sunlight is recommended.
- ⊘  Children should not climb or jump on the furniture.
- ⊘  Do not write on furniture without a padded barrier to protect the surface.
- ✓  To obtain the longest lifespan of your outdoor products,avoid extended and lengthy exposure to rain, snow, and direct sunshine. Whenerer possible cover the product and / or place under patio or awnings.
- ⊘  Not for commercial use. For residential use only .
- ⊘  Stains may be removed with mild soap solution and damp cloth.
- ✓  Dust and pick-up spills using a clean, non colored lint-free cloth