MIKOLO

ASSEMBLY INSTRUCTIONS

WR00

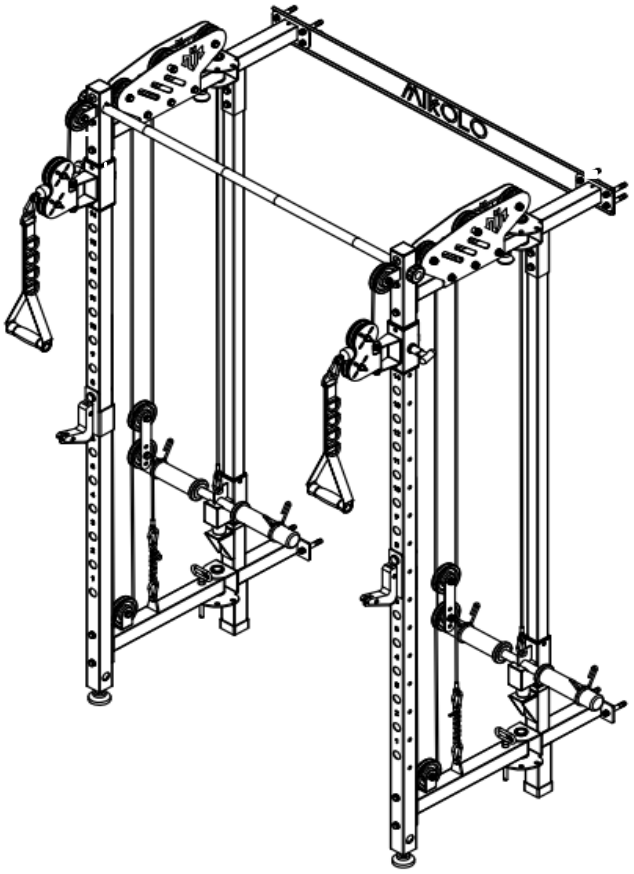

Read all precautions and instructions in this manual before using this equipment

Assembly Caution ---------- 3

Part List ---------- 4

Step 1 ---------- 5

Step 2 ---------- 6

Step 3 ---------- 7

Step 4 ---------- 8

Step 5 ---------- 9

Step 6 ---------- 10

Step 7 ---------- 11

After-Sale Information ---------- 12

ASSEMBLY CAUTION

Please carefully read the following information before installation

Assembling requires at least two people
Do not tighten all screws before assembly is complete
Ensure that all accessories are complete. If not, please contact us via email

STOP

If you are missing any parts, or otherwise have any warranty issues, please contact us first.

Shortcut: A Lot of People Doing That Way

To enhance your installation process for both speed and convenience, consider removing all accessories from the box, carefully opening the packaging, and arranging everything neatly on the floor. This preparation can streamline your setup experience.

The following tools might help you improve your installation experience

- Adjustable wranches
- Rubber hammers
- Socket set
- Electric Wrench

WARNING

Choking hazard. Small parts-Please exercise caution if smallchildren or pets are present.

Sharp objects may be involved. Use precaution and protection.

Heavy object. Use lifting aids and proper lifting techniques when moving

PARTS LIST

A1.Upper Connection Frame 2 PCS	A2.Guide Rod 2 PCS	A3.Weight Holder 2 PCS	A4.Shock Absorption Rack 2 PCS	A5.Bottom Connection Frame 2 PCS
B1.Pulley Sliding Sleeve Right 1 PC	B2.Right Upright Rod 1 PC	B3.Pulley Sliding Sleeve Left 1 PC	B4.Left Upright Rod 1 PC	B5.Plug 2 PCS
C1.Logo Board 4 PCS	C2.Pulley 12 PCS	C3.Pulley spacer 8 PCS	D1.Wall Mounted Board 1 PC	D2.Pull Up Rod 1 PC
D3.Knob 2 PCS	E1.Cable A 2 PCS	E2.Moving Pulley Fixed Piece 4 PCS	E3.Cable B 2 PCS	E4.CLip 8 PCS
E5.Chain 2 PCS	F1.Cable Handle 2 PCS	F2.J Hook Right 1 PC	F3.J Hook Left 1 PC	F4.2"Sleeve 2 PCS
F5.Spring Collar 4 PCS				

HARDWARE LIST

1.Bolt(M10 x 65) 4 PCS	2.Bolt(M10 x 45) 6 PCS	3.Bolt(M10 x 60) 4 PCS	4.Bolt(M10 x 70) 8 PCS	5.Bolt(M10 x 75) 4 PCS
6.Bolt(M10 x 95) 2 PCS	7.Bolt(M8 x 80) 12 PCS	8.Washer(M10) 64 PCS	9.Locknut(M10) 34 PCS	

STEP1:

A1.Upper Connection Frame 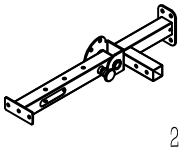 2 PCS	A2.Guide Rod 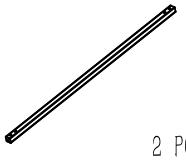 2 PCS	A3.Weight Holder 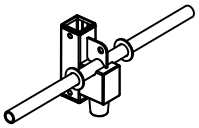 2 PCS	A4.Shock Absorption Rack 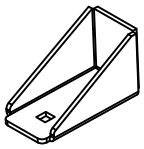 2 PCS	A5.Bottom Connection Frame 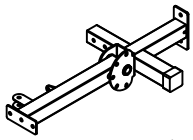 2 PCS
1.Bolt(M10 x 65) 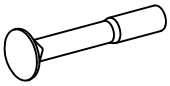 4 PCS	3.Bolt(M10 x 60) 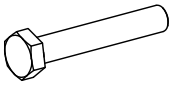 4 PCS	8.Washer(M10) 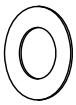 12 PCS	9.Locknut(M10) 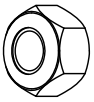 8 PCS	

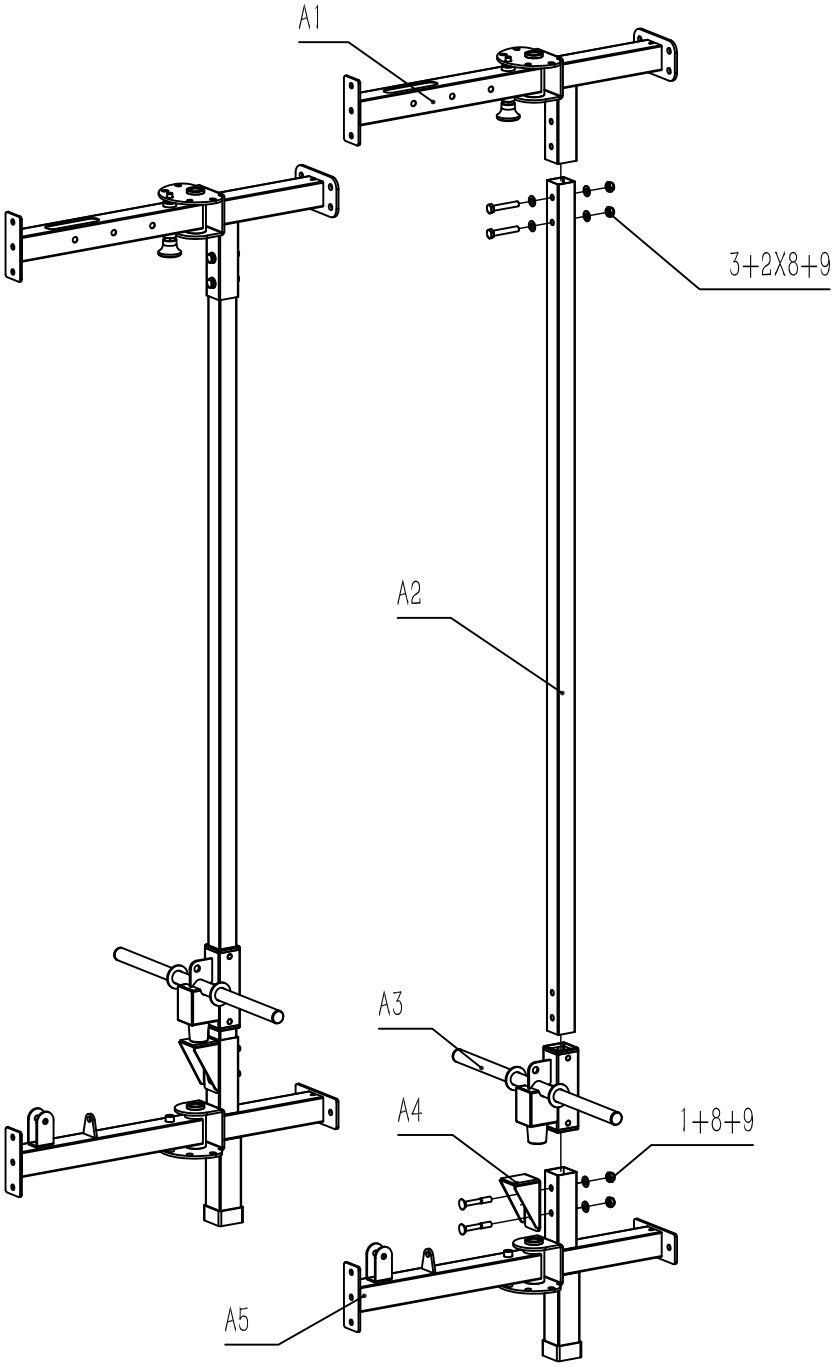

STEP2:

B1.Pulley Sliding Sleeve Right 1 PC	B2.Right Upright Rod 1 PC	B3.Pulley Sliding Sleeve Left 1 PC	B4.Left Upright Rod 1 PC	B5.Plug 2 PCS
4.Bolt(M10 x 70) 8 PCS	8.Washer(M10) 16 PCS	9.Locknut(M10) 8 PCS		

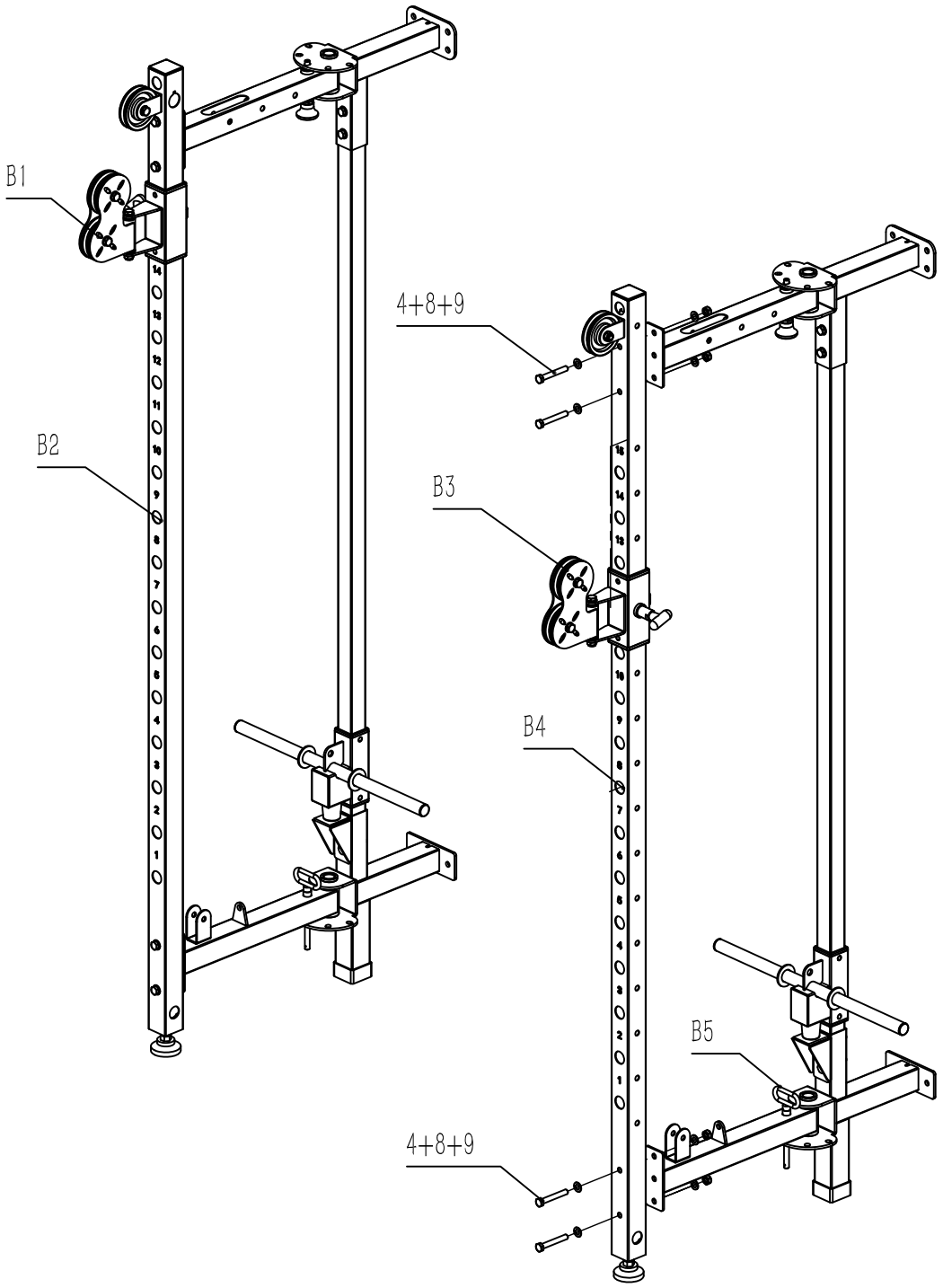

STEP3:

C1.Logo Board 4 PCS	C2.Pulley 6 PCS	C3.Pulley spacer 8 PCS	4.Bolt(M10 x 70) 6 PCS	5.Bolt(M10 x 75) 4 PCS
6.Bolt(M10 x 95) 2 PCS	8.Washer(M10) 24 PCS	9.Locknut(M10) 12 PCS		

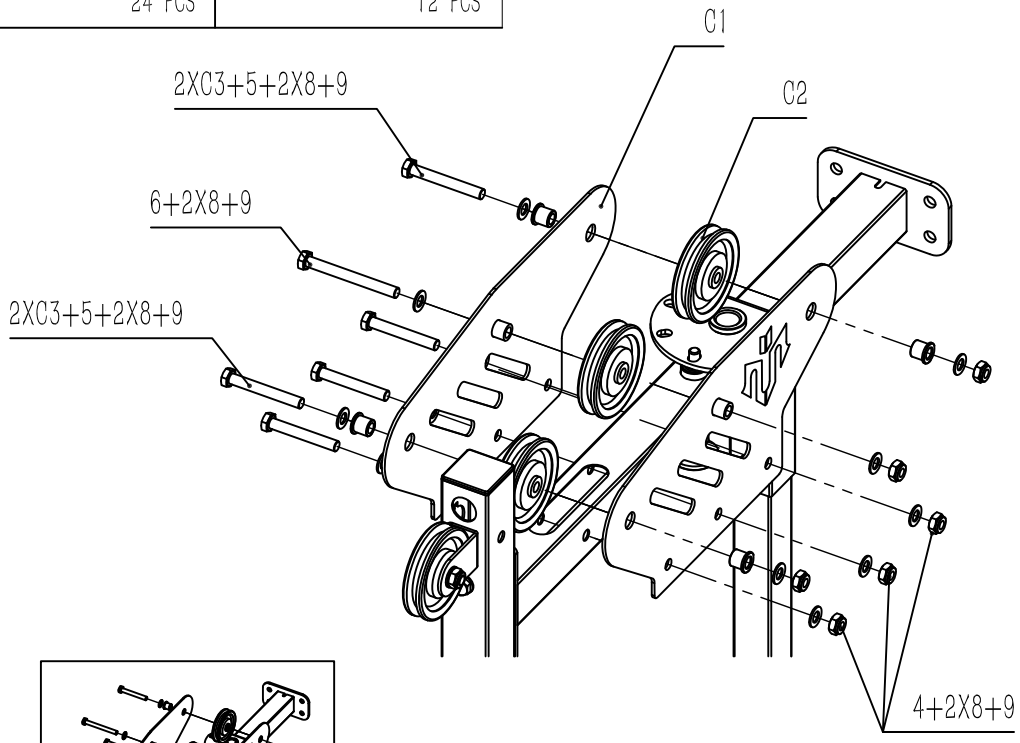

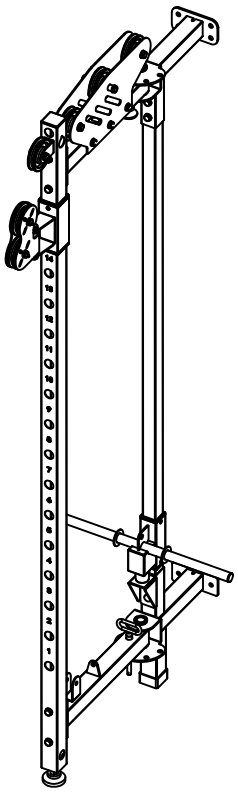

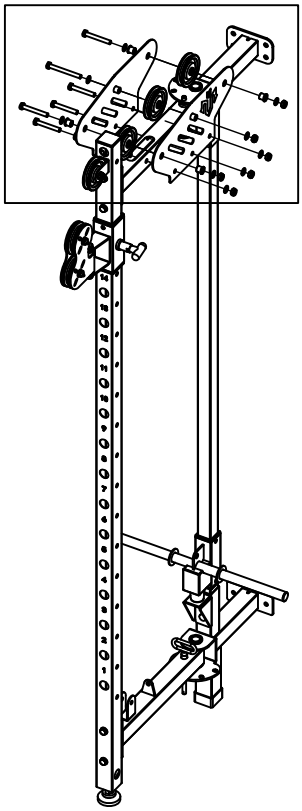

STEP4:

Punch a hole in the wall as shown, with a diameter of 0.47 ". After marking the hole position with a pen, you can use step3 to check the alignment of the wall, and then punch the hole after it is confirmed.

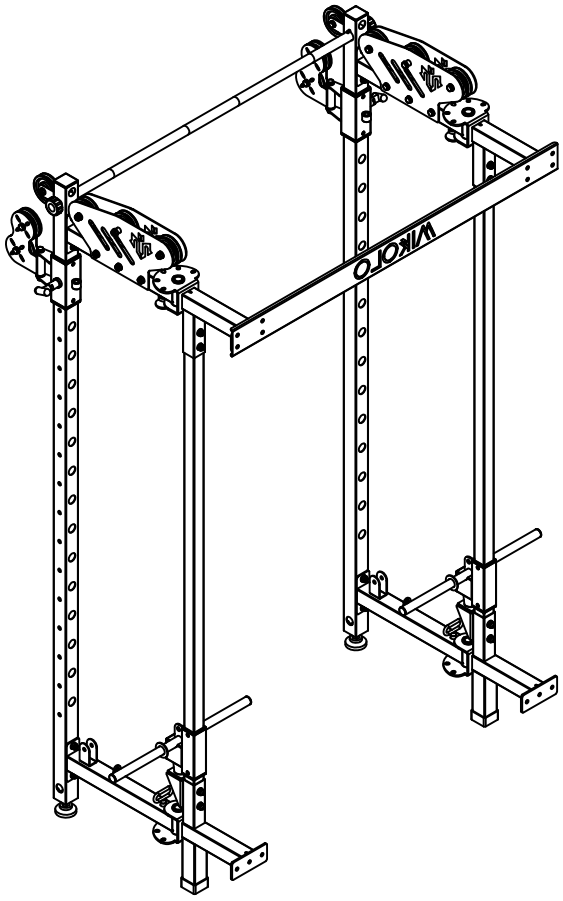

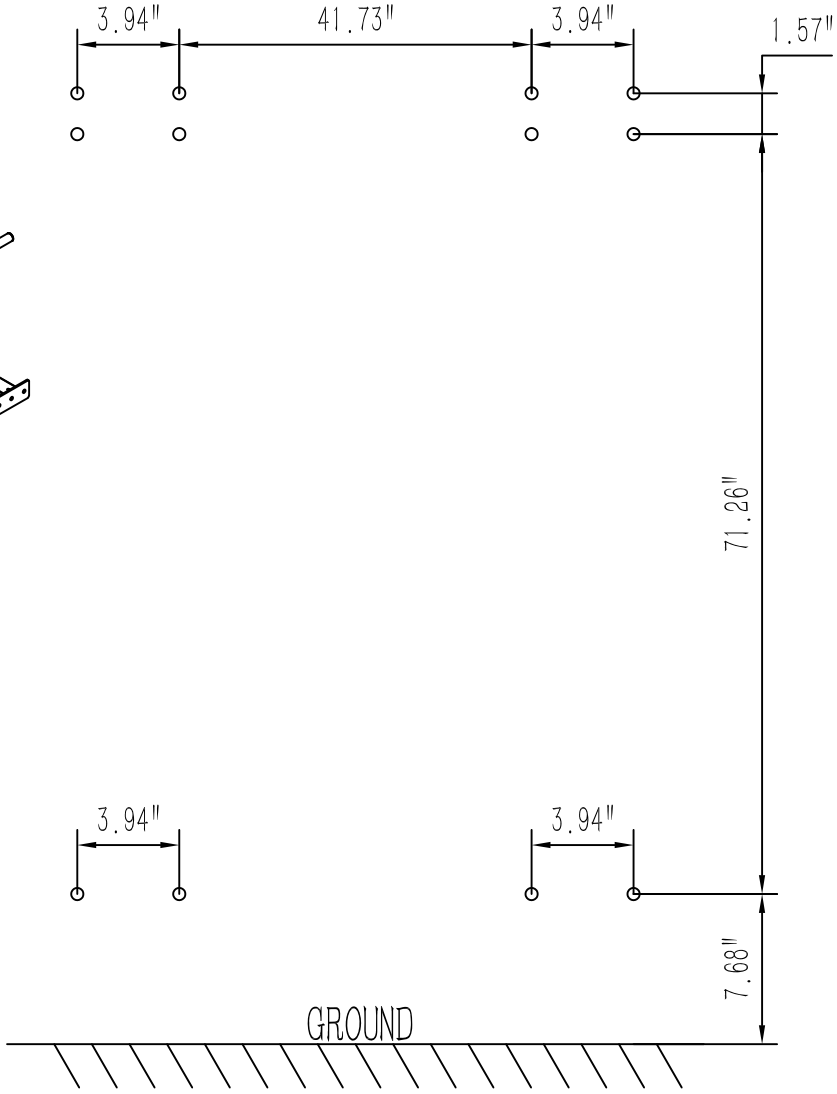

STEP5:

D1.Wall Mounted Board	D2.Pull Up Rod	D3.Knob	STEP3	7.Bolt(M8 × 80)
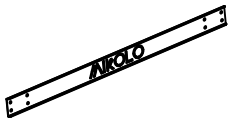	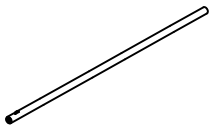		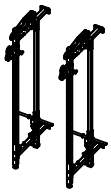	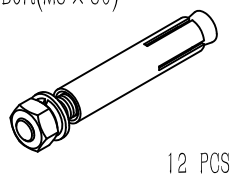
1 PC	1 PC	2 PCS	1 PC	12 PCS

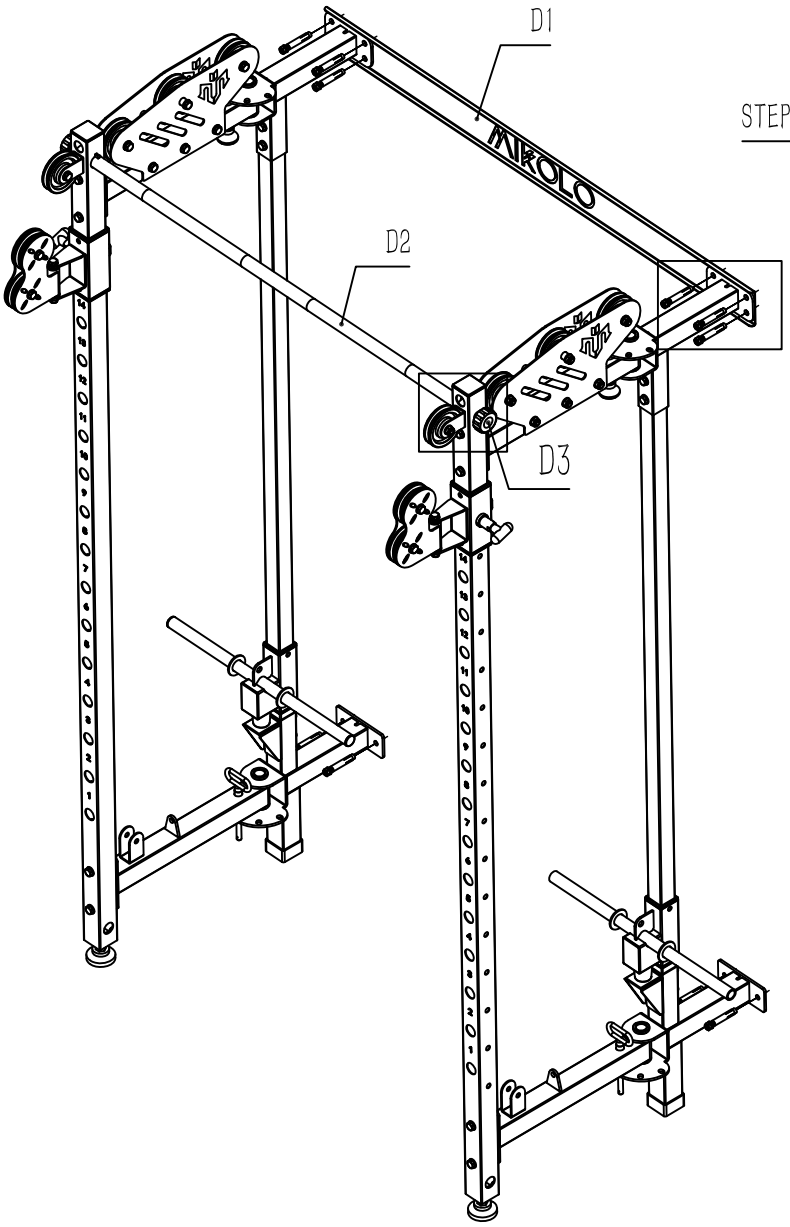

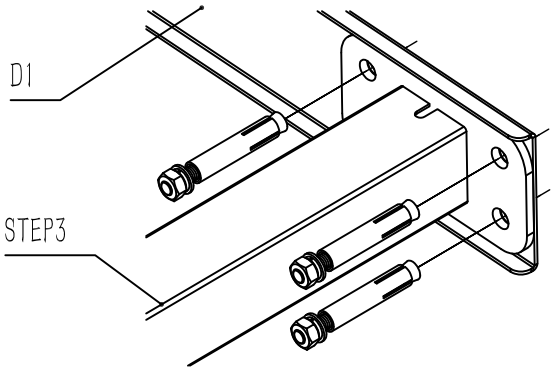

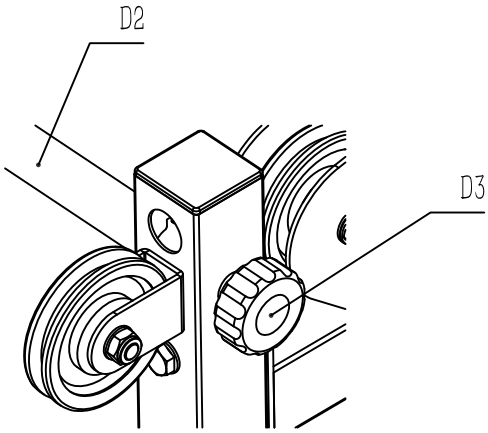

STEP6:

E1.Cable A 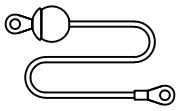 2 PCS	E2.Moving Pulley Fixed Piece 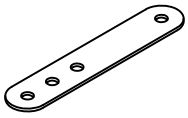 4 PCS	E3.Cable B 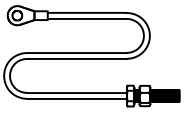 2 PCS	E4.CLip 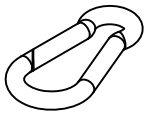 6 PCS	E5.Chain 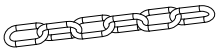 2 PCS
C2.Pulley 6 PCS	2.Bolt(M10 x 45) 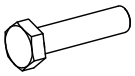 6 PCS	8.Washer(M10) 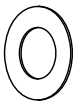 12 PCS	9.Locknut(M10) 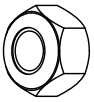 6 PCS	

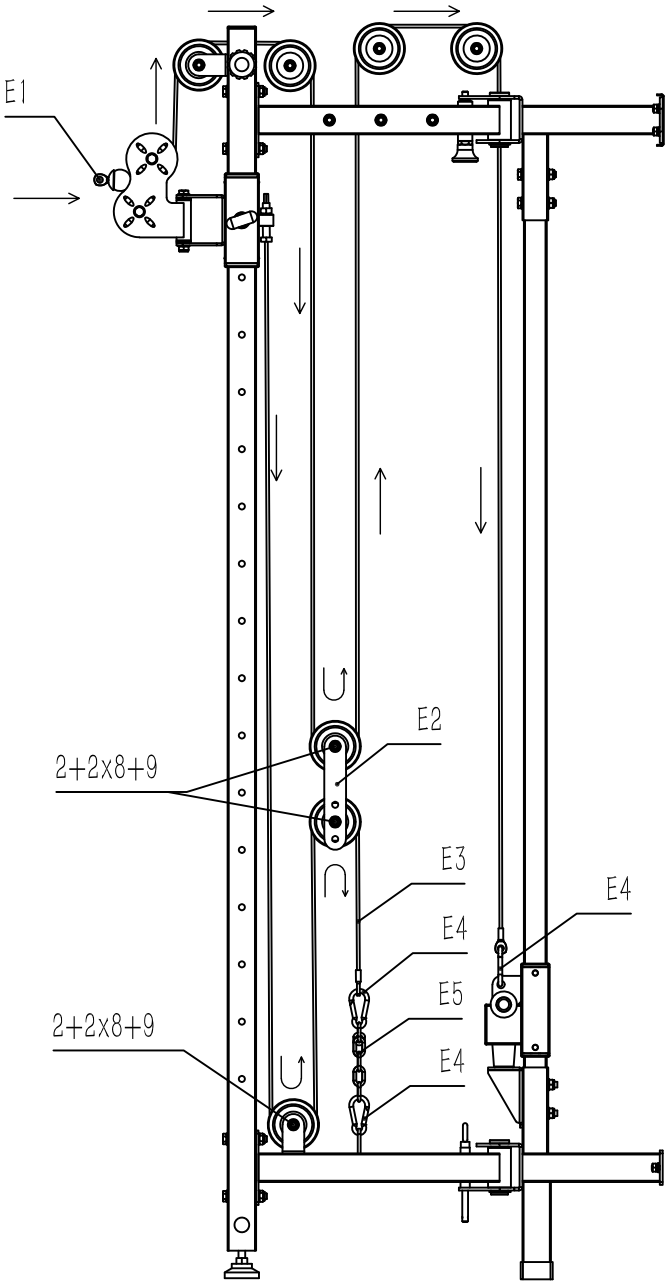

STEP7:

F1.Cable Handle	F2.J Hook Right	F3.J Hook Left	F4.2"Sleeve	F5.Spring Collar
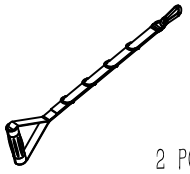 2 PCS	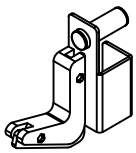 1 PC	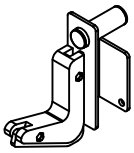 1 PC	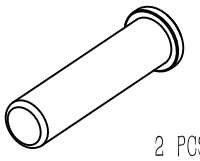 2 PCS	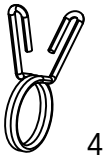 4 PCS

E4.CLip
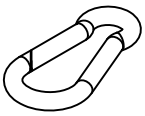 2 PCS

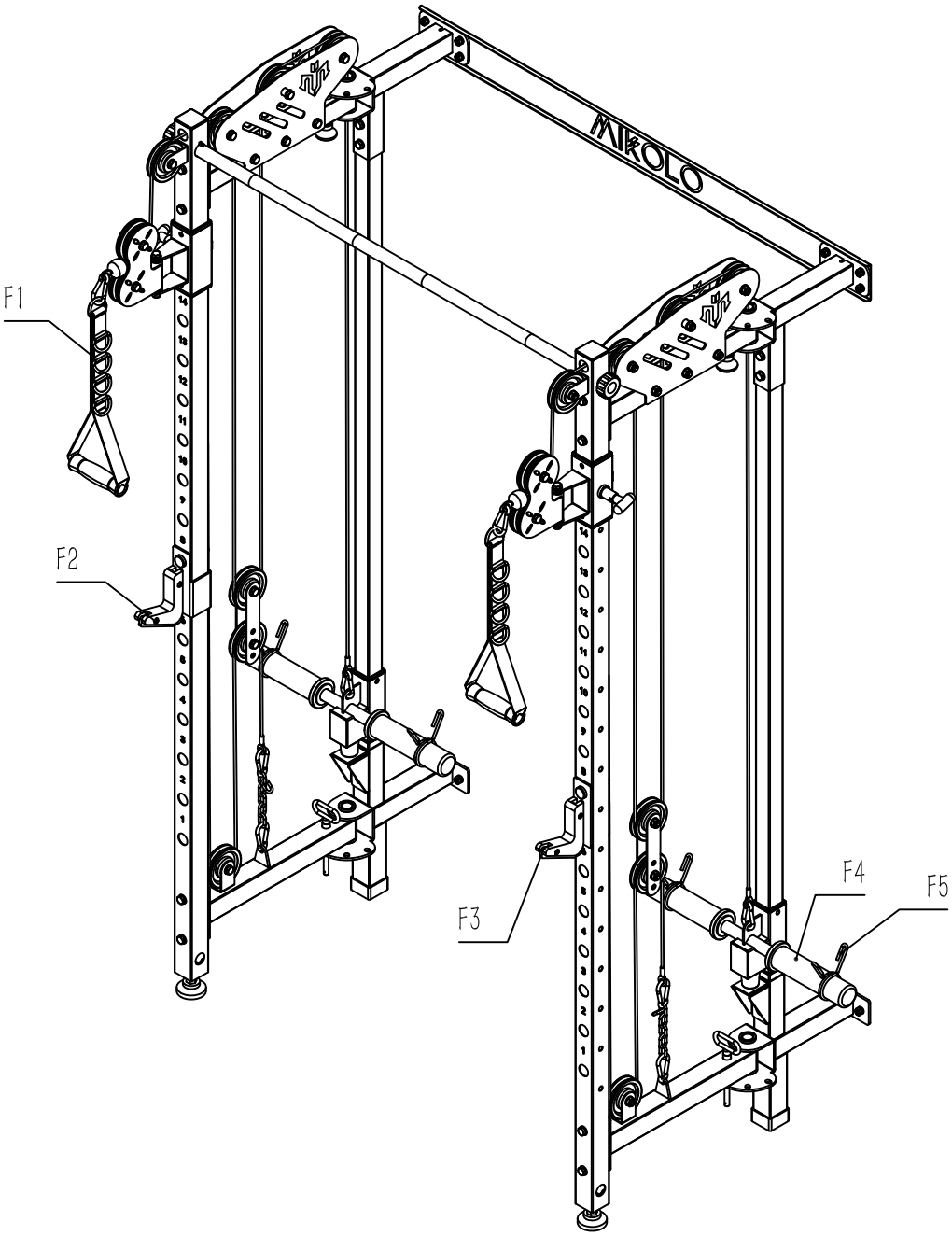

FORMAT OF AFTER-SALE EMAIL

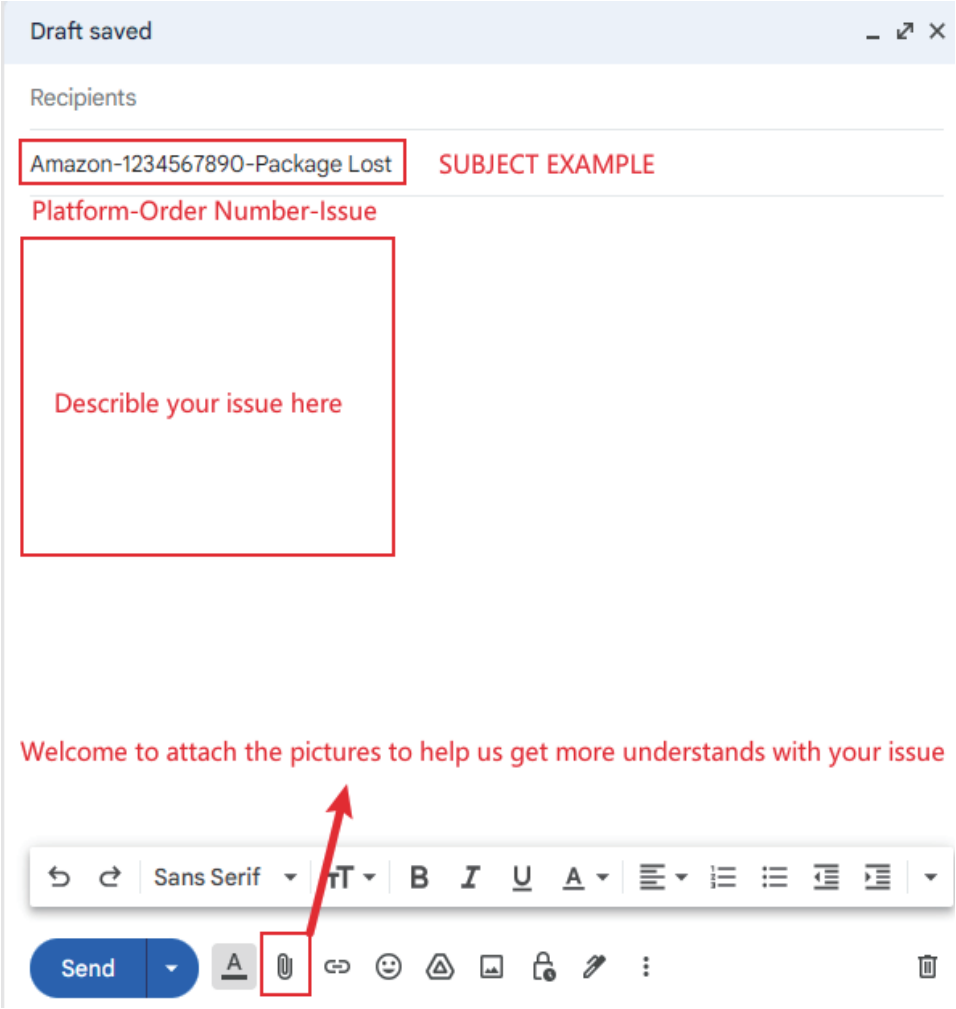

Welcome to send us some pictures to describe your problem, which will help us better and faster understand your current situation, and thus provide you with the best solution.

The machine you ordered has been carefully inspected and is fully guaranteed to be in perfect working order. This lifetime warranty covers missing parts, damaged parts, package lost, all manufacturing and mechanical defects, excluding malfunctions or deterioration resulting from accidents or negligence. with this card, you are entitled to obtain service at any platform, such as Amazon, Walmart, and our own website.

Please provide your Platform and Order Number to us in the email subject.

NEED HELP?
CONTACT US FIRST.

support@gym-mikolo.com