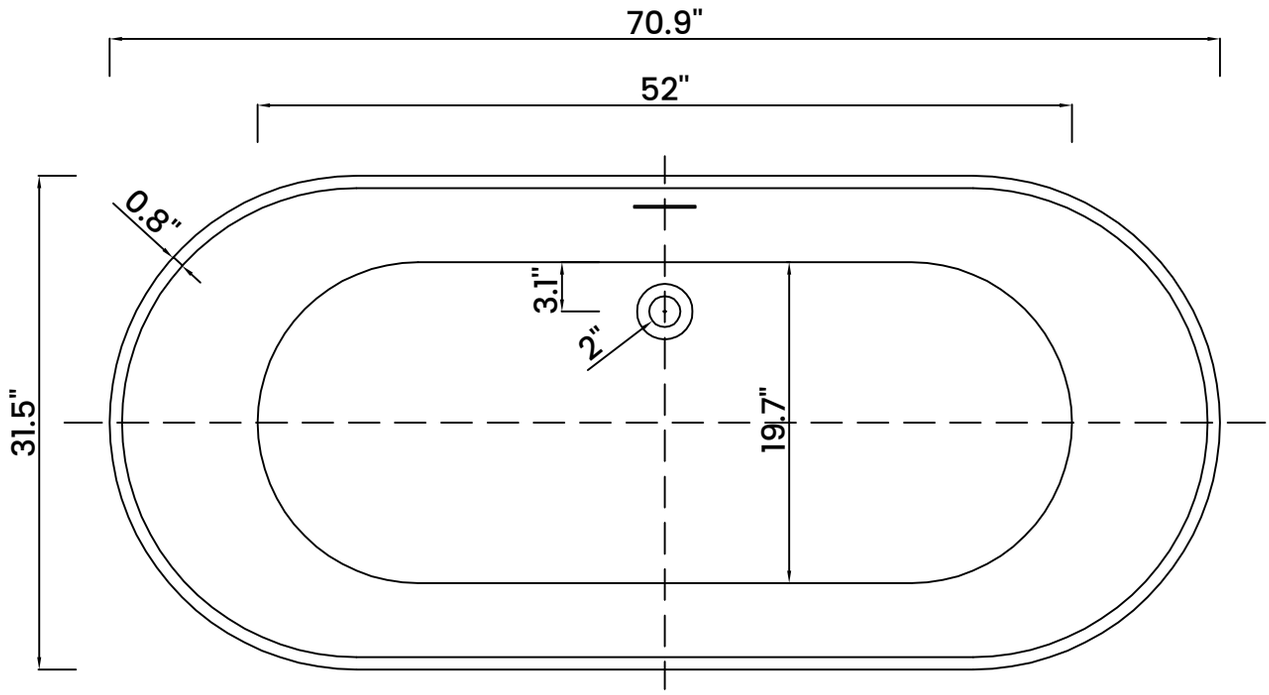
70.9"
52"
0.8"
3.1"
2"
31.5"
19.7"

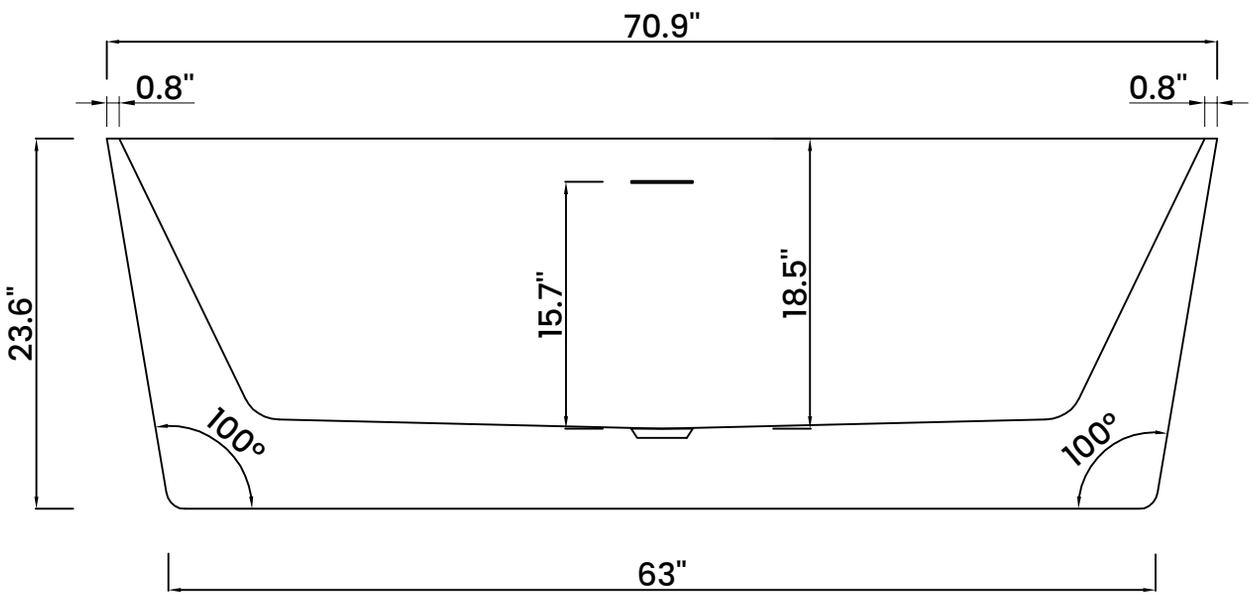
70.9"
0.8"
0.8"
23.6"
15.7"
18.5"
100°
100°
63"

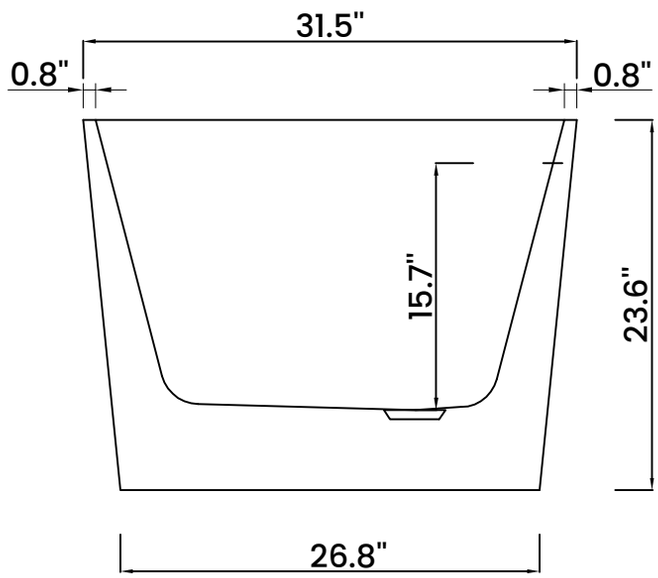
31.5"
0.8"
0.8"
15.7"
23.6"
26.8"