Danze®

SPECIFICATIONS

SINGLE HOLE MOUNT LAVATORY FAUCET

Description

- Single lever, single hole mount
- All brass pop-up drain assembly
- Optional deck plate included
- Fits 1 3/8" to 1 1/2" diameter mounting hole

D222158
PARMA™

Available Colors & Finish
- Chrome
- Brushed Nickel (BN)

Flow & Valving

- See Chart

Standards

- ASME A112.18.1
- CSA B125
- NSF 61-9
- Energy policy act of 1992
- Listed IAPMO/UPC
- ADA Accessibility Guidelines for Buildings and Facilities - 4.27.4 Controls and Mechanisms

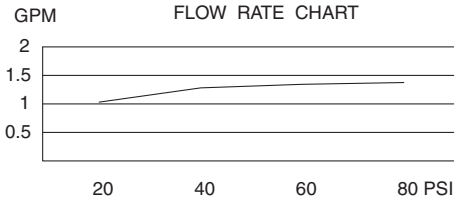

Warranty

Danze products are covered by a manufacturer's limited "lifetime" warranty for manufacturing defects.

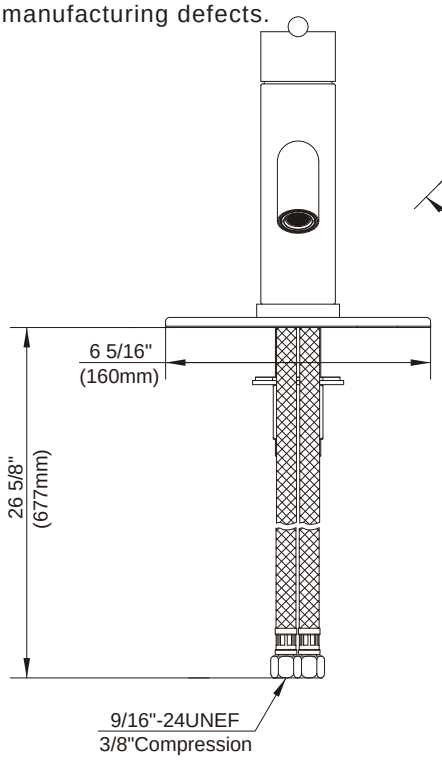

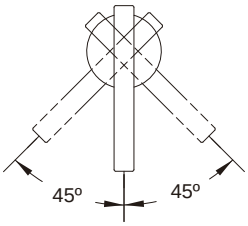

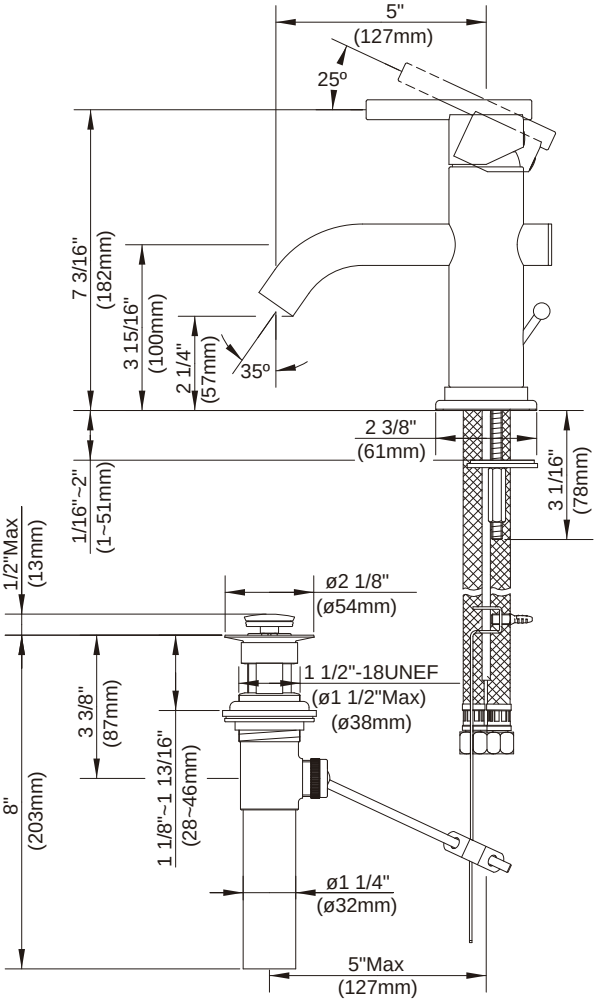

Specific Features: _____ *Submitted Model No.:* _____

Danze, Inc., 2500 Internationale Parkway, Woodridge, IL 60517, USA WWW.DANZE.COM