# Assembly Instructions

**Caution: You must read this before you proceed**

**Please look in seat for hardware packs and legs.**

## Sofa

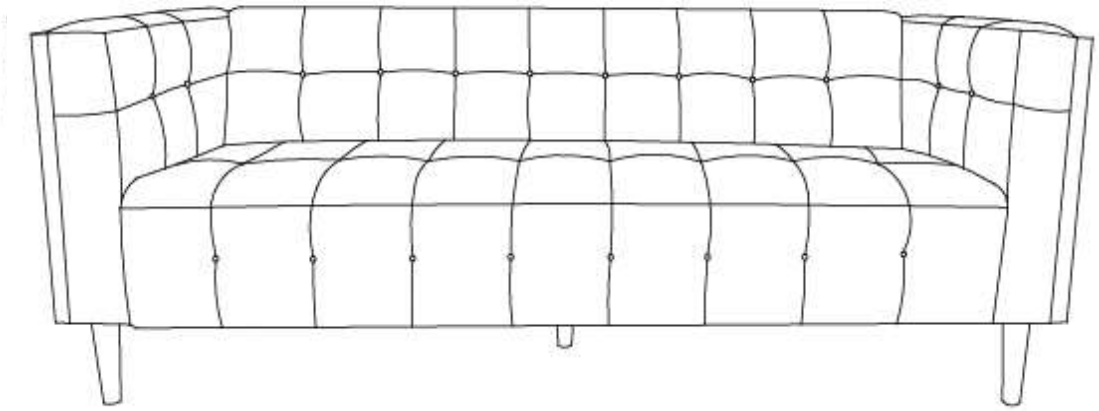

## Parts List

| Label | Picture | Description | QTY |
|---|---|---|---|
| A | 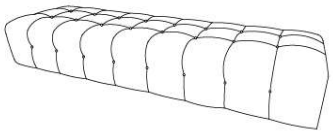 | Sofa Base | 1 |

| | | | |
|---|---|---|---|
| B | 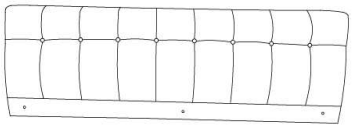 | Sofa Backrest | 1 |
| C | | Left Arm | 1 |
| D | | Right Arm | 1 |
| E | | Wooden Leg with Plastic Gasket | 4 |
| F | | Middle Wooden Leg with Plastic Gasket | 1 |

## Hardware List

| Label | Picture | Description | QTY |
|---|---|---|---|
| ① | | Plastic Gasket | 3 |
| ② | | Bolt(M8*80mm） | 14 |
| ③ | | Washer | 14 |

| | | | |
|---|---|---|---|
| ④ | | Spring Washer | 14 |
| ⑤ | | Allen Key | 1 |

# Assembly Preparation

Before Beginning Assembly:

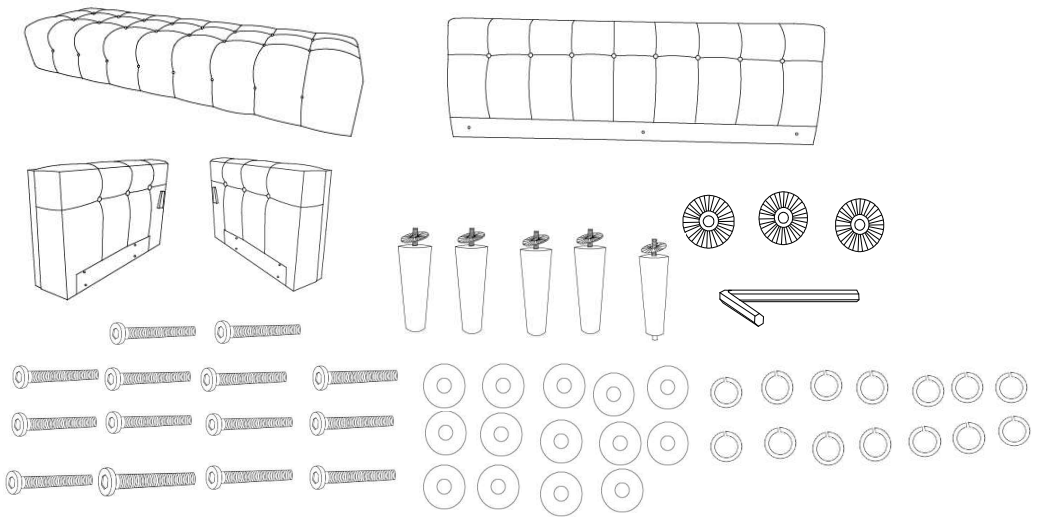

- Read instructions, cover to cover-
- Have 2 adults on hand for assembly-
- Do not assemble on flooring or carpet-
- Assemble on a clean non-marring surface (packing foam)-
- Save all packaging until finished-

# Assembly Steps

## Overview

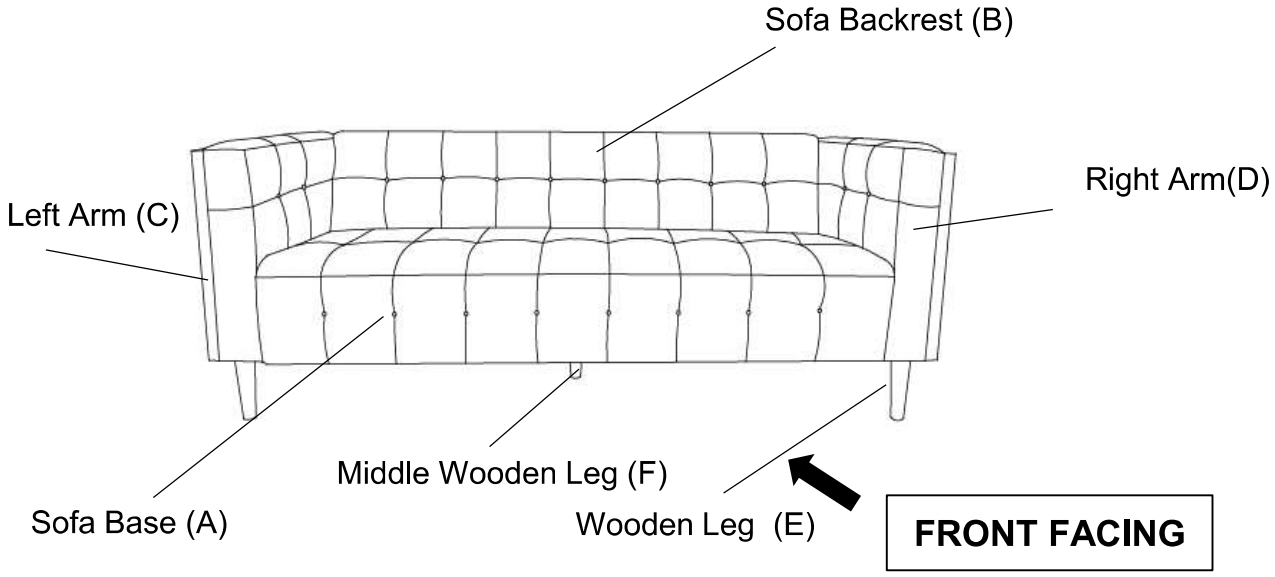


This Sofa has multiple parts and may require about 30 minutes to assemble. To give you an overview of the Loveseat parts, the above picture is to help you put the various parts into perspective. Please read through the instructions below to familiarise yourself with the parts and steps before assembly.

## Step 1

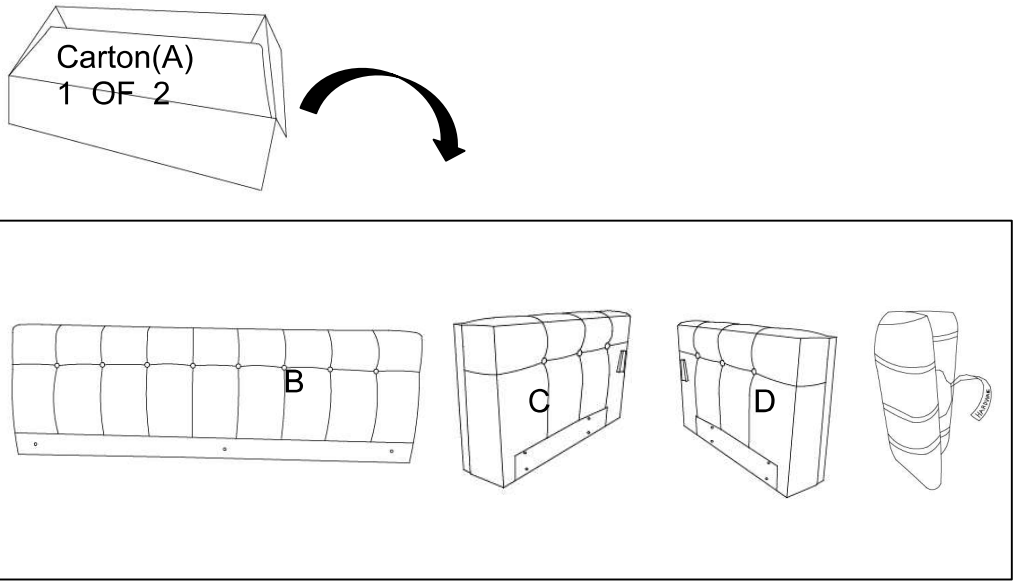


Take the Sofa Backrest(B), Left Arm (C), Right Arm(D) and a Small Package out from the carton "A" and place them on a clean, non-marring surface.

## Step 2

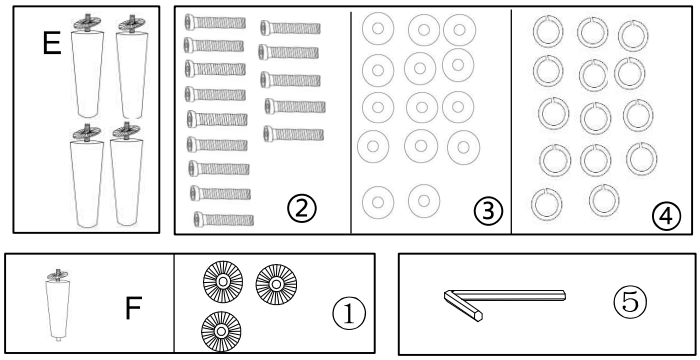


Open the Small Package to take out the Wooden Legs(E)&(F) and Hardware.

## Step 3

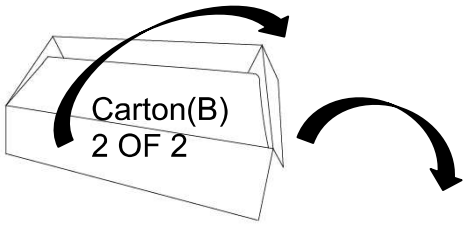


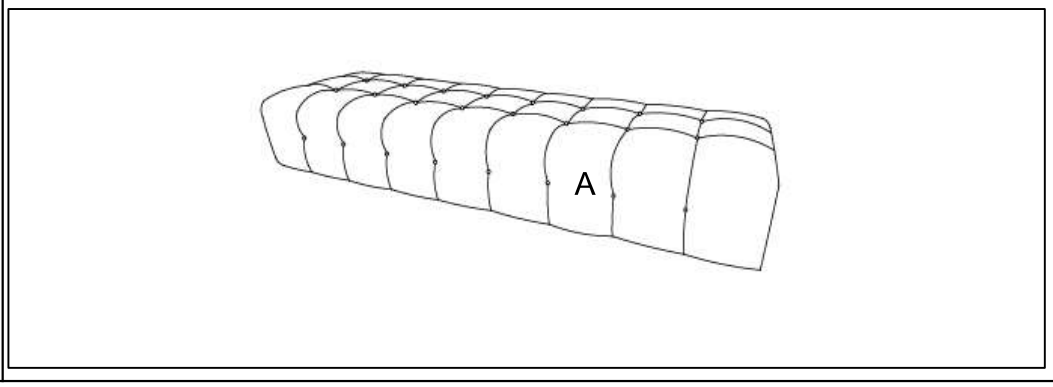


Take out the Sofa Base (A) from Carton "B", place it on a clean, non-marring surface.

## Step 4

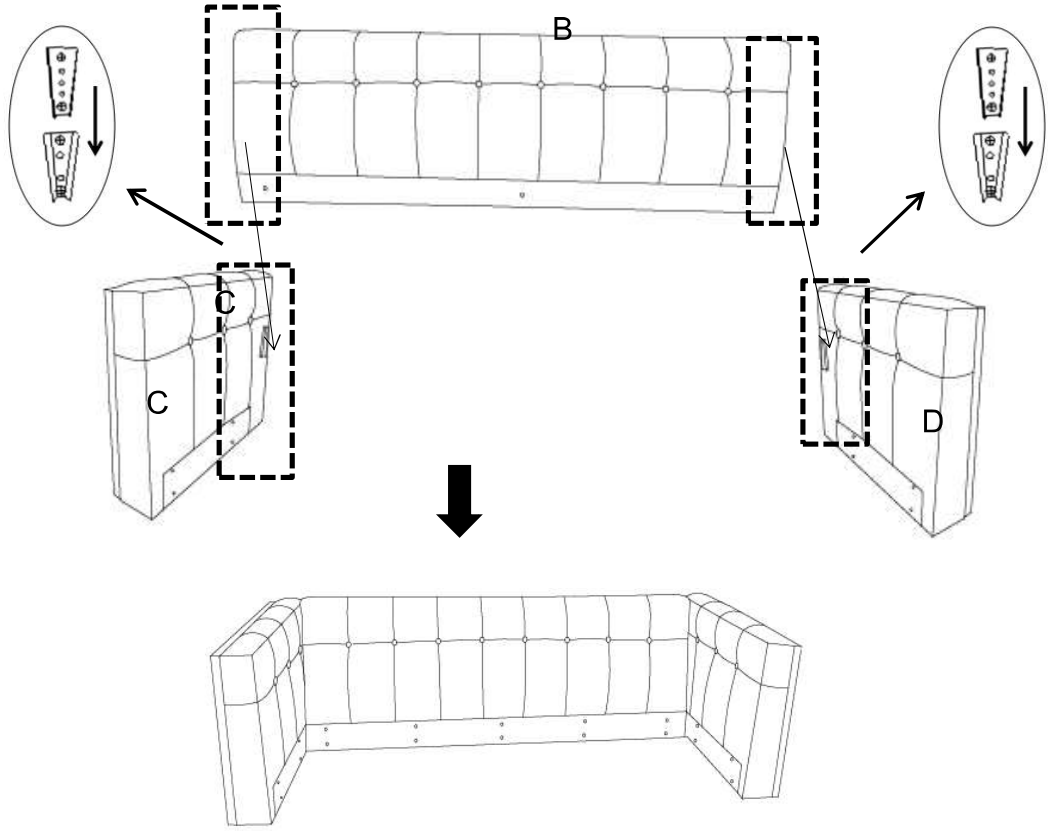


With assistance from your adult partner, put the Sofa Backrest(B) between the Left Arm(C) and Right Arm(D).
Align the mounting brackets on the both sides of Sofa Backrest(B) with those on the Left Arm(C) and Right Arm(D) , then slide the Sofa Backrest(B) downwards to make sure it locks as pictured.
Please squeeze the armrest properly against the backrest to ensure that the inserts can be assembled smoothly.

## Step 5

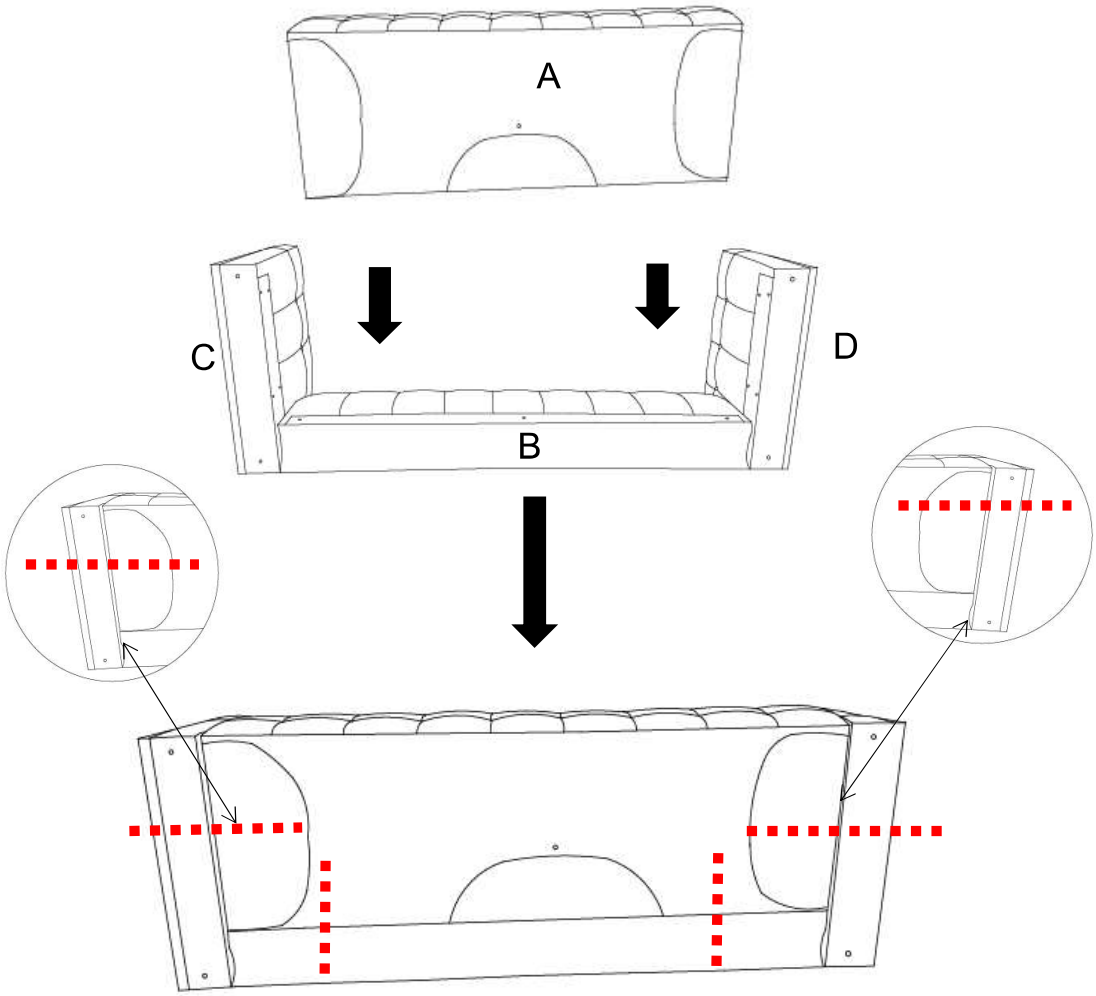


With assistance from your adult partner,align the mounting positions on the back and on both sides of the Sofa Base(A) to the mounting positions of Left Arm(C),Right Arm(D) and Sofa Backrest(B), make sure the bottom of the Sofa Base(A),Sofa Backrest(B),Left Arm(C) and Right Arm(D) at the same level.

## Step 6

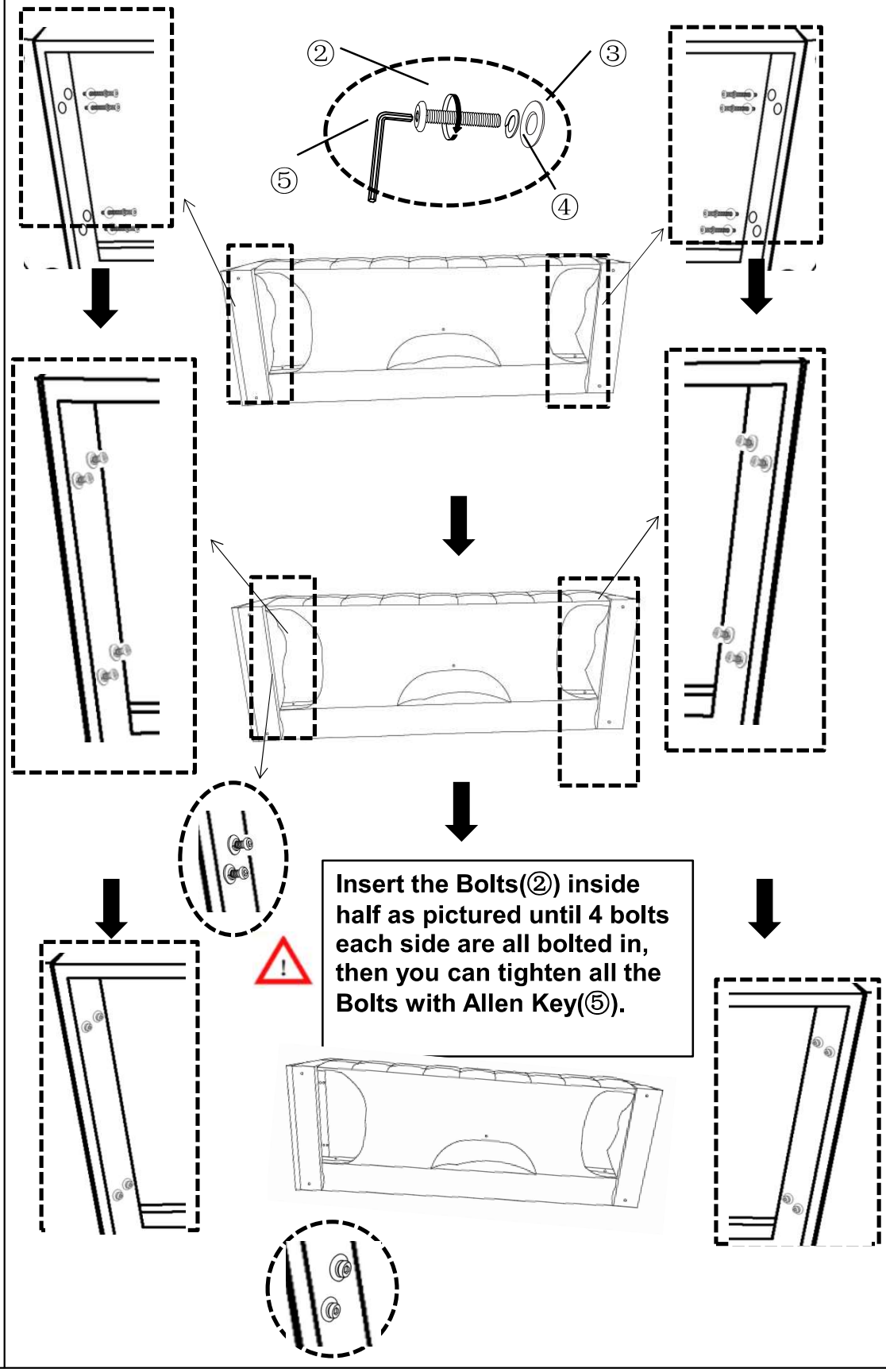
②
③
⑤
④
Insert the Bolts(②) inside half as pictured until 4 bolts each side are all bolted in, then you can tighten all the Bolts with Allen Key(⑤).

With assistance from your adult partner,place the whole product on a clean, non-marring surface.
Open the non-woven cover under both sides of Sofa Base(A).
Then using the Allen Key(⑤) secure Sofa Base(A) to the Left Arm(C) and Right Arm(D) with Bolts(②), Spring Washer(④)and Washers(③).
**Please don't tighten the Bolts, just bolt them half-way until all are bolted in, then tighten all the Bolts with the Allen Key(⑤).**
**Note: The bottom of the Sofa Base(A) frame must be aligned with the bottom of the handrail**.

Step 7

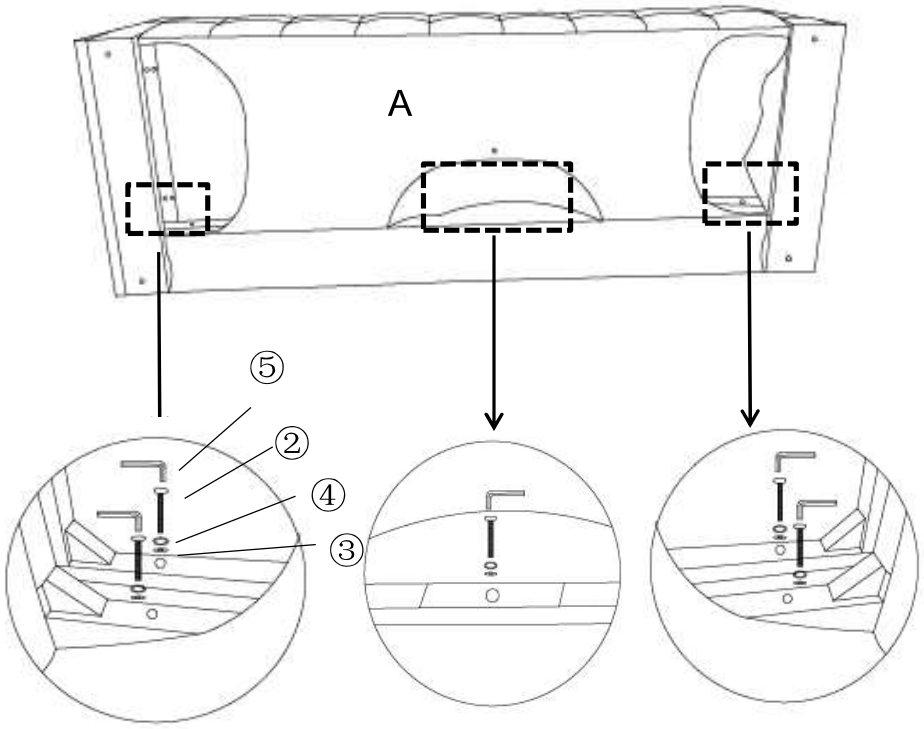


**Insert the 5 Bolts(②) half-way until all Bolts are bolted in with Allen Key(⑤)**

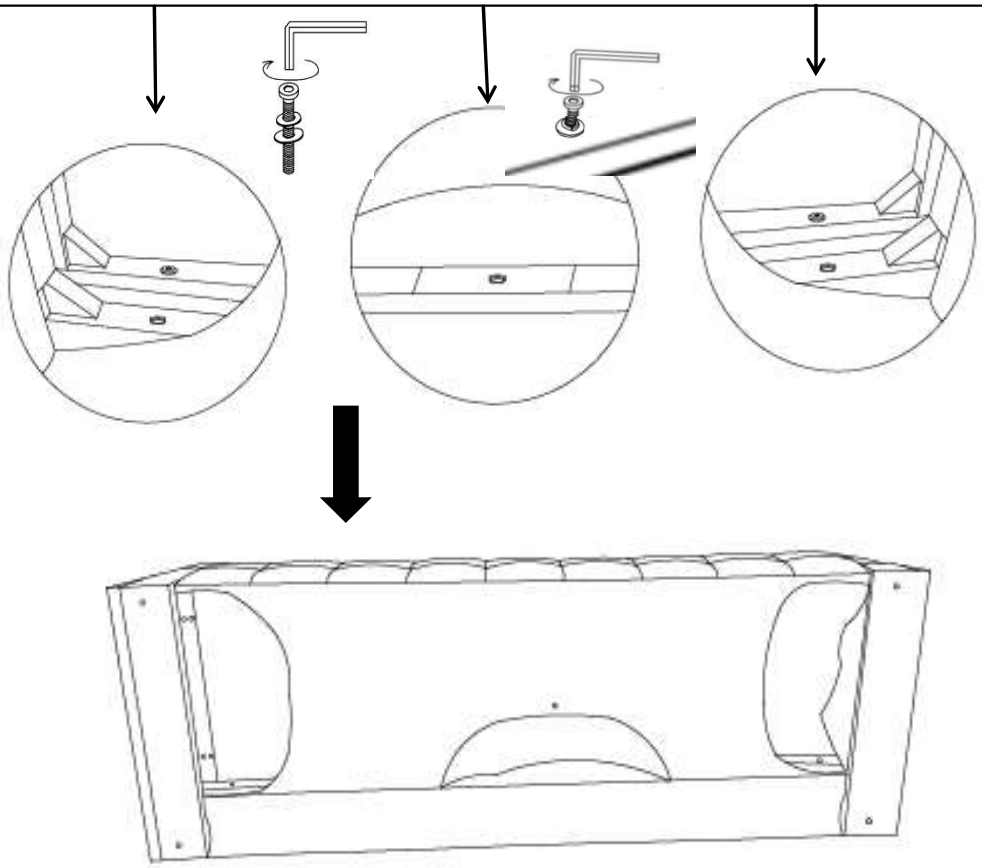

Open the Non-woven cover under Sofa Base(A).
Using the Allen Key(⑤) secure Sofa Base(A) to the front-bottom Sofa Backrest(B) with the Bolts(②), Spring Ring(④)and Washers(③).
Insert all the 5 Bolts(②) half-way starting one by one as pictured.
Then tighten the Bolts(②) with the Allen Key(⑤).
Close the non-woven fabric under the Sofa Base(A) with Velcro.

Step 8

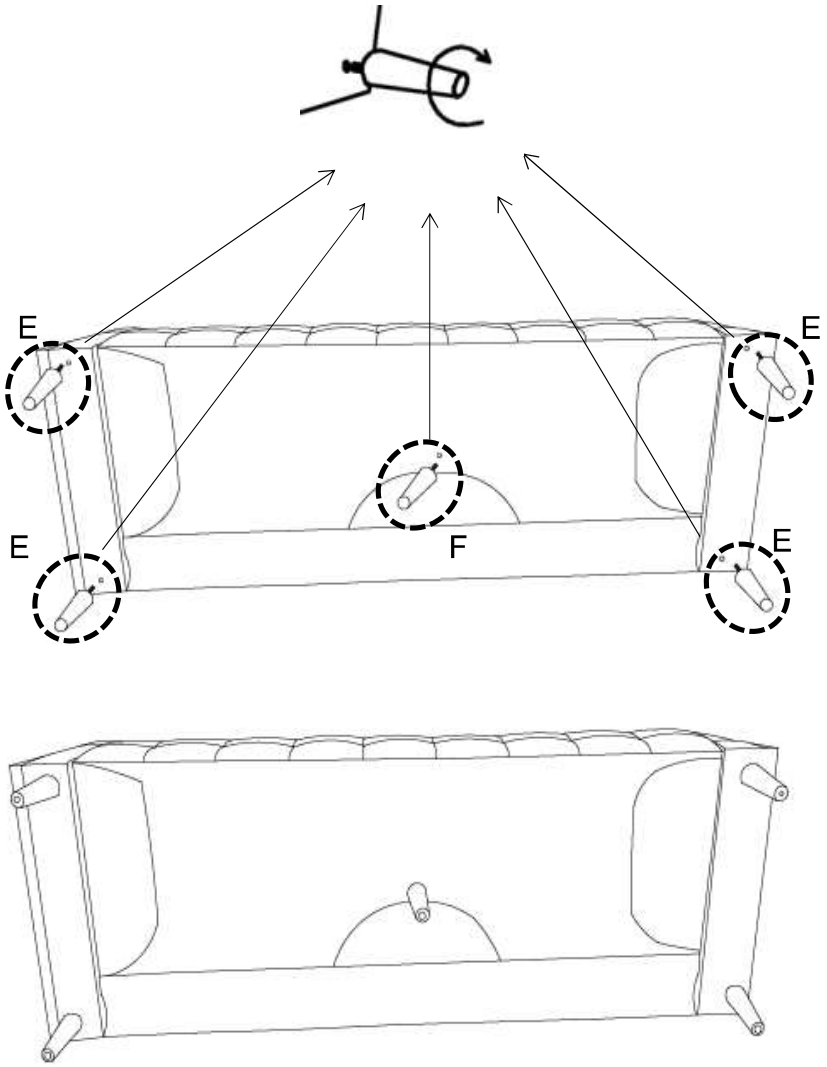


Install the Wood Legs(E) and Middle Wooden Leg(F) onto the bottom of the Sofa by placing one Gasket(①) on the threaded stem.
Tighten by turning the Leg clockwise.
**Note: The use of Gaskets are OPTIONALand are especially useful to help alleviate slight wobbles. Some Legs may need more than one Gasket whilst some Legs may not need any.**

| | |
|---|---|
| Step 9 | 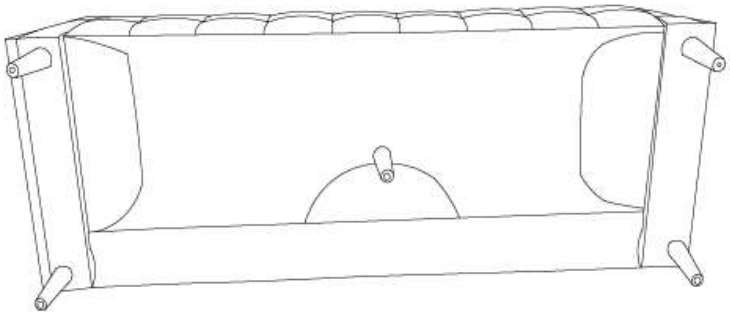 <br>**Don't turn the sofa directly, you need to lift the sofa up then put it down gently(in order to make sure the Legs or Legs support are not be damanged by any incorrect operation.**<br> 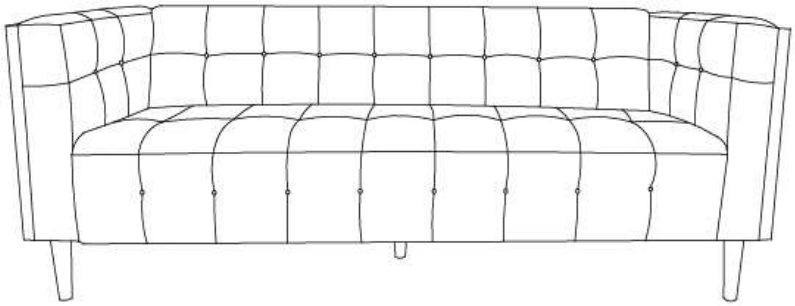 |

Make sure all of the parts connected to the right position and stronge enough.
**Now your Sofa is ready for use.**
**This Sofa can only be used on a flat, level surface.**

## Step 10

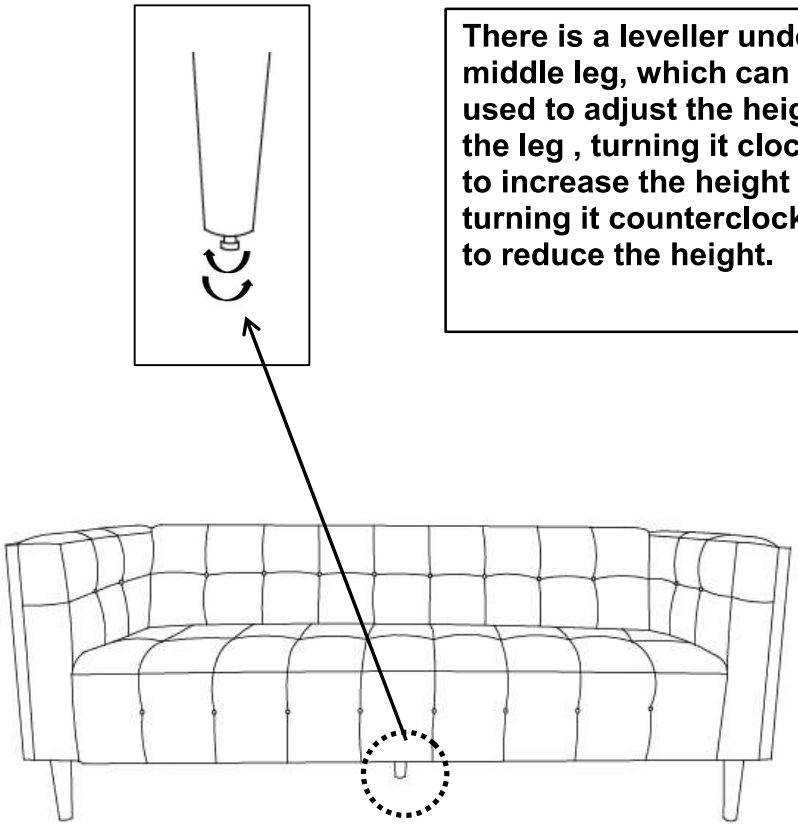

**There is a leveller under the middle leg, which can be used to adjust the height of the leg , turning it clockwise to increase the height or turning it counterclockwise to reduce the height.**

**Note: if the sofa is unstable, you can adjust the leveller under the Middle Wooden Leg to make it more stable.**

## Care & Maintenance

| | |
|---|---|
| ✓ | • Furniture may scratch floors. We recommend using furniture pads to protect your floors. |
| ⊘ | • Do not put hot items directly on furniture surface. |
| ⊘ | • Do not clean furniture with harsh cleansers or polish. |
| ⊘ | • Do not place furniture under direct sunlight. |
| ⊘ | • Do not place furniture near heating or cooling vents. |
| ⊘ | • Do not write on furniture without a padded barrier to protect the surface. |
| ⊘ | • Do not place furniture outside . For indoor use only. |
| ⊘ | • Not for commercial use. For residential use only. |
| ⊘ | • Stains may be removed with mild soap solution and damp cloth. |
| ⊘ | • Children should not climb or jump on the furniture. |
| ✓ | • Dust and pick-up spills using a clean, non-colored, lint-free cloth. |

Questions & Answers about Proposition 65

• What is Proposition 65?

Proposition 65 requires businesses to provide warnings to Californians about significant exposures to chemicals that cause cancer, birth defects or other reproductive harm. These chemicals can be in the products that Californians purchase, in their homes or workplaces, or that are released into the environment. By requiring that this information be provided, Proposition 65 enables Californians to make informed decisions about their exposures to these chemicals.

Proposition 65 also prohibits California businesses from knowingly discharging significant amounts of listed chemicals into sources of drinking water.

Proposition 65 requires California to publish a list of chemicals known to cause cancer, birth defects or other reproductive harm. This list, which must be updated at least once a year, has grown to include approximately 900 chemicals since it was first published in 1987.

• What types of chemicals are on the Proposition 65 list?

The list contains a wide range of naturally occurring and synthetic chemicals that include additives or ingredients in pesticides, common household products, food, drugs, dyes, or solvents. Listed chemicals may also be used in manufacturing and construction, or they may be byproducts of chemical processes, such as motor vehicle exhaust.

• What does a warning mean?

If a warning is placed on a product label or posted or distributed at a workplace, a business, or in rental housing, the business issuing the warning is aware or believes that it is exposing individuals to one or more listed chemicals.

By law, a warning must be given for listed chemicals unless the exposure is low enough to pose no significant risk of cancer or is significantly below levels observed to cause birth defects or other reproductive harm.

• Where can I get more information on Proposition 65?

If you have specific questions on the administration or implementation of Proposition 65, you can contact OEHHA's Proposition 65 program at P65.Questions@oehha.ca.gov, or by phone at (916) 445-6900.