ASSEMBLY INSTRUCTIONS

2 ARMS OF LEFT SIDE & RIGHT SIDE POWER RECLINING CHAIR, ROUNDED TRACK ARMS
2 ARMS OF LEFT SIDE & RIGHT SIDE POWER RECLINING CHAIR, CURVED TRACK ARMS

WARNING:

- Keep hands, feet, and children away from moving parts.
- Ensure the area behind and under the chair is clear before operating.
- Do not allow children to operate the recliner.

Note: Do not use power tools for assembly. Power tools increase the risk of over-tightening, which may lead to splitting or cracking the wood.

COMPONENT LIST

NO.	DRAWING	Q.TY	DESCRIPTION
A	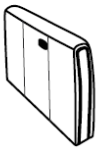	1PC	LEFT SIDE ARM
B	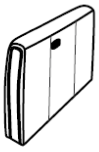	1PC	RIGHT SIDE ARM
C	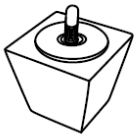	4PCS	WOODEN LEG (60*60*72mm)

Please follow the drawings below to assemble the item.

Step 1.

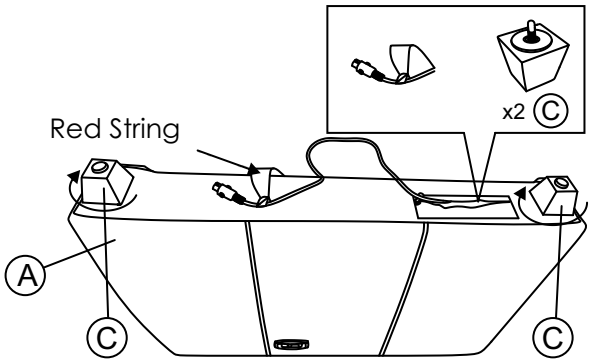

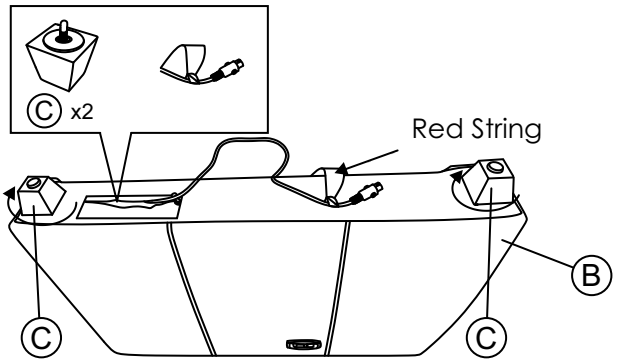

MADE IN VIET NAM

Step 2.

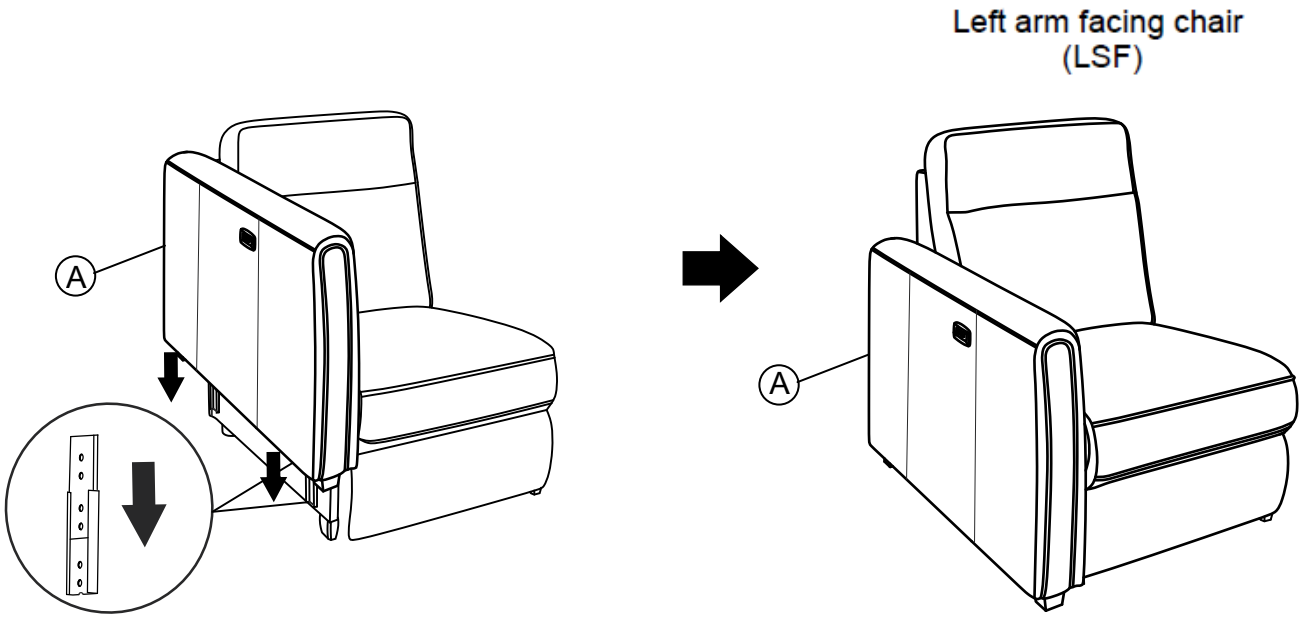

Step 3.

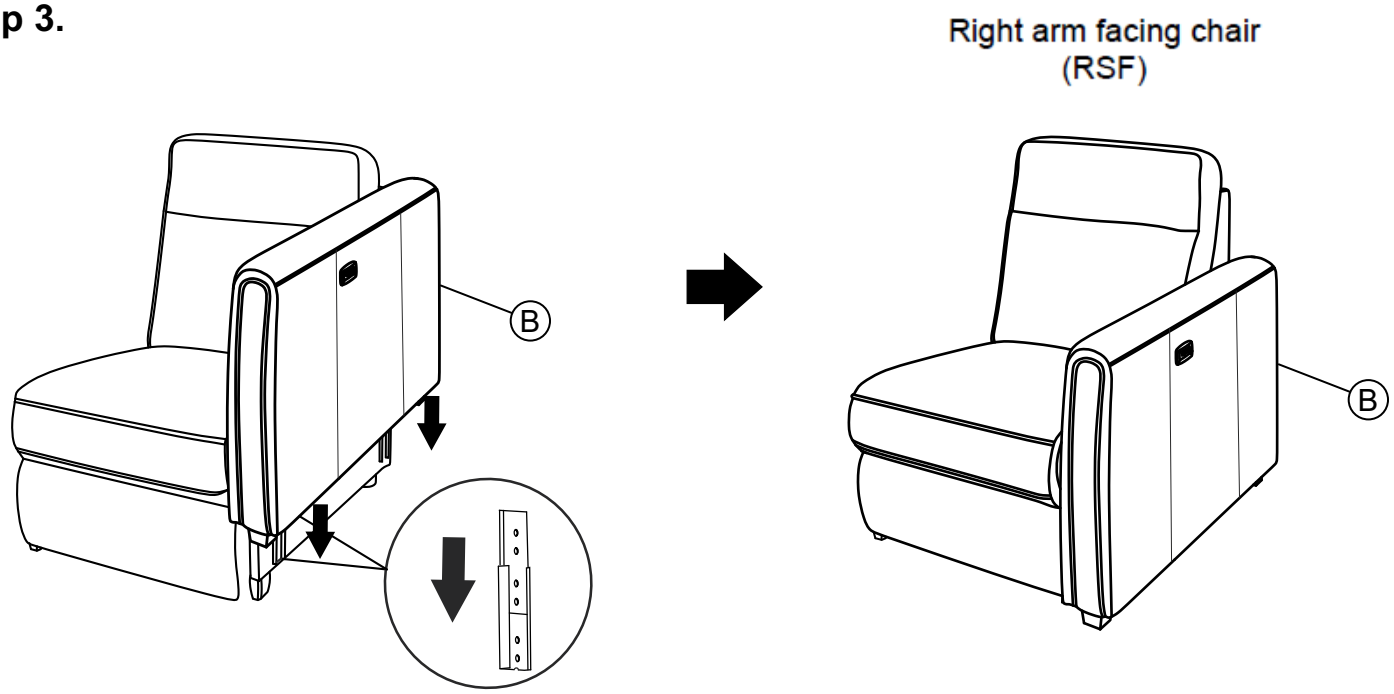

CARE INSTRUCTIONS FOR AIR LEATHER:

To maintain the original appearance of your fabric furniture, please follow the simple care procedures below:

- Avoid exposing furniture directly to sunlight or heating and air conditioning outlets. Exposure to sunlight or heating and air conditioning outlets will fade/damage fabric.
- Wipe gently with a damp soft cloth to remove dust, dirt and any grime build up.

⚠ It is recommended to install protective pads under all legs and supports to avoid damage or scratches when placing furniture on a wood floor or other hard surface, and to limit indentation and prevent discoloration if placing on carpet.

PLEASE KEEP ASSEMBLY INSTRUCTION FOR FUTURE REFERENCE

MADE IN VIET NAM

wayfair

ASSEMBLY INSTRUCTIONS

POWER LEFT SIDE RECLINING CHAIR
2 BACKRESTS OF LEFT SIDE AND RIGHT SIDE POWER RECLINING CHAIRS

WARNING:

- Keep hands, feet, and children away from moving parts.
- Ensure the area behind and under the chair is clear before operating.
- Do not allow children to operate the recliner.

Note: Do not use power tools for assembly. Power tools increase the risk of over-tightening, which may lead to splitting or cracking the wood.

COMPONENT LIST

NO.	DRAWING	Q.TY	DESCRIPTION
A		1PC	SEAT BASE
B		1PC	BACK REST ITEM NO: 8368BRW-B, 8368NVY-B (in the other carton)
C		2PCS	PLASTIC LEG (Ø60*80mm)
D		2PCS	PLASTIC LEG (30*60*90mm)

NO.	DRAWING	Q.TY	DESCRIPTION
1		2PCS	BOLT (1/4*25)
2		4PCS	BOLT (1/4*20)
3		2PCS	METAL PLATE
4		1PC	ALLEN KEY (4/23")
5		1PC	ADAPTER
6		1PC	POWER CORD

MADE IN VIET NAM

Please follow the drawings below to assemble the item.

Step 1.

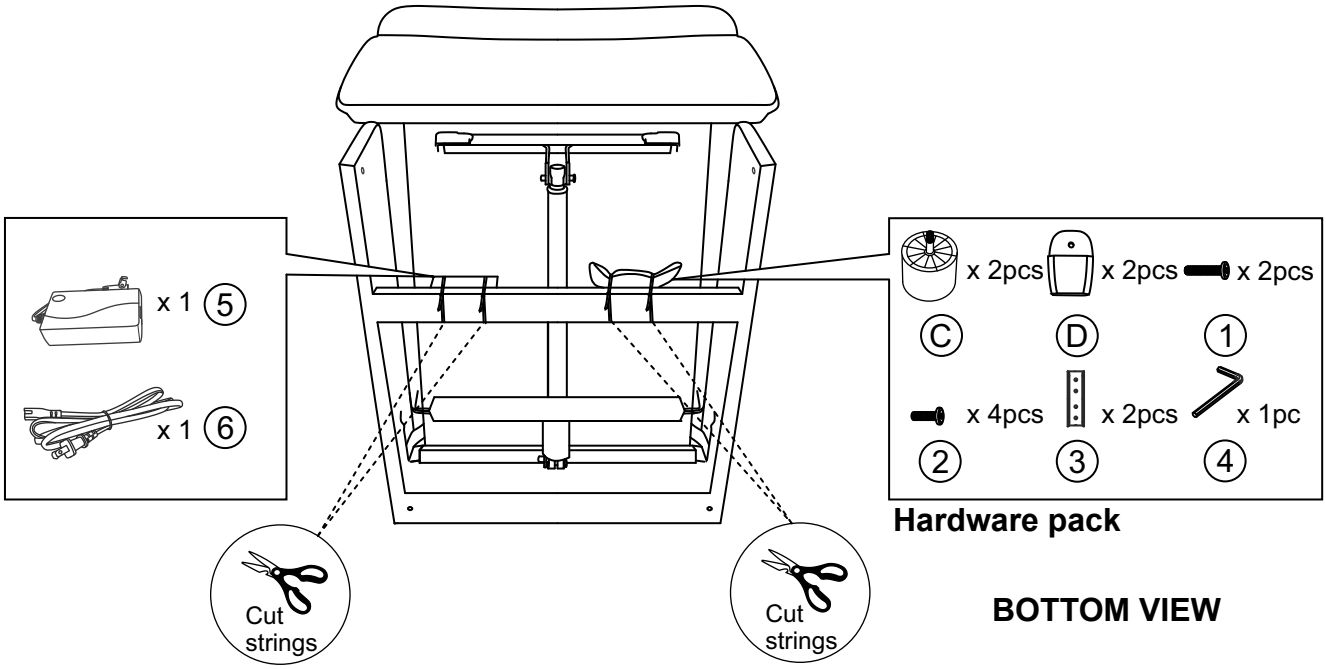

Step 2.

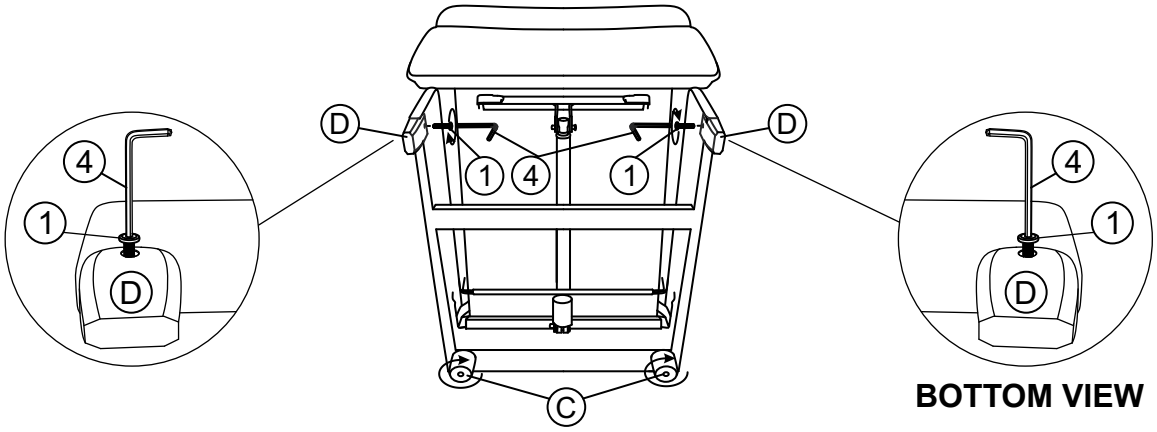

Step 3.

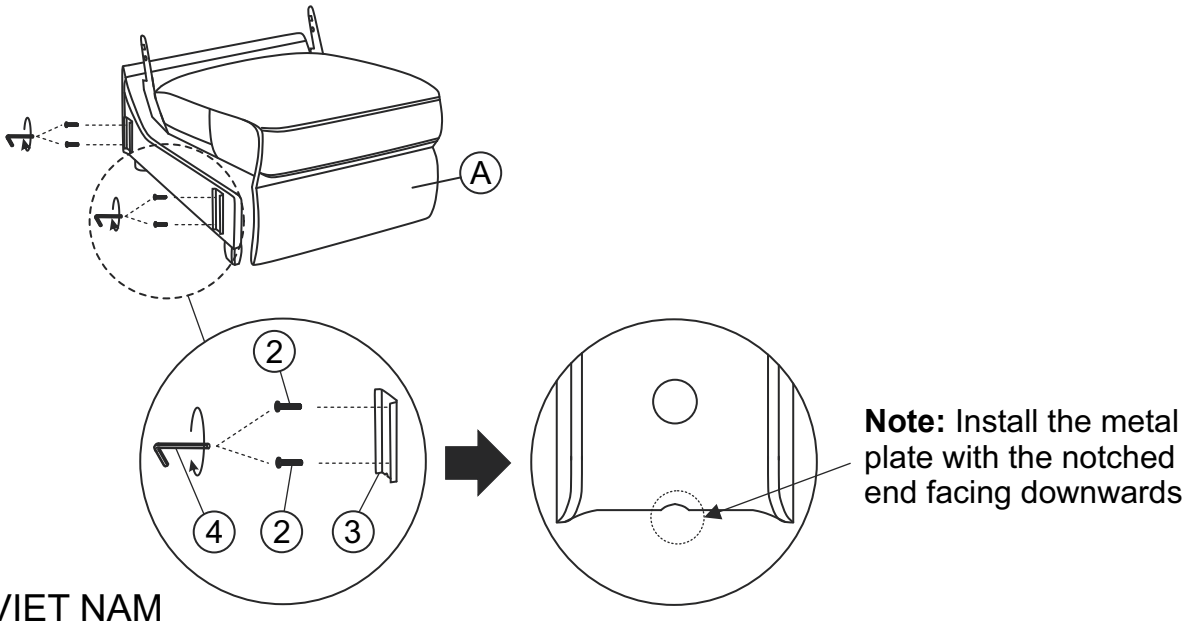

MADE IN VIET NAM

Step 4.

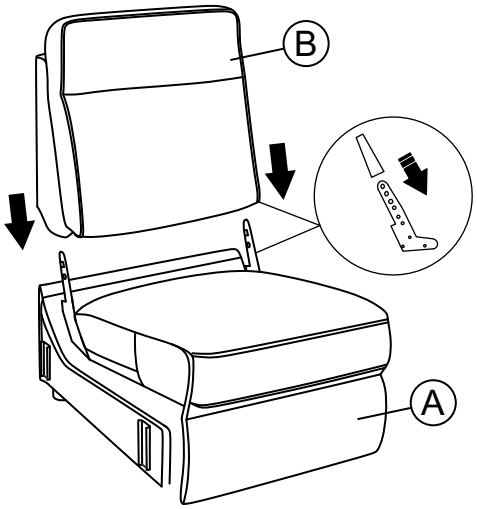

Step 5.

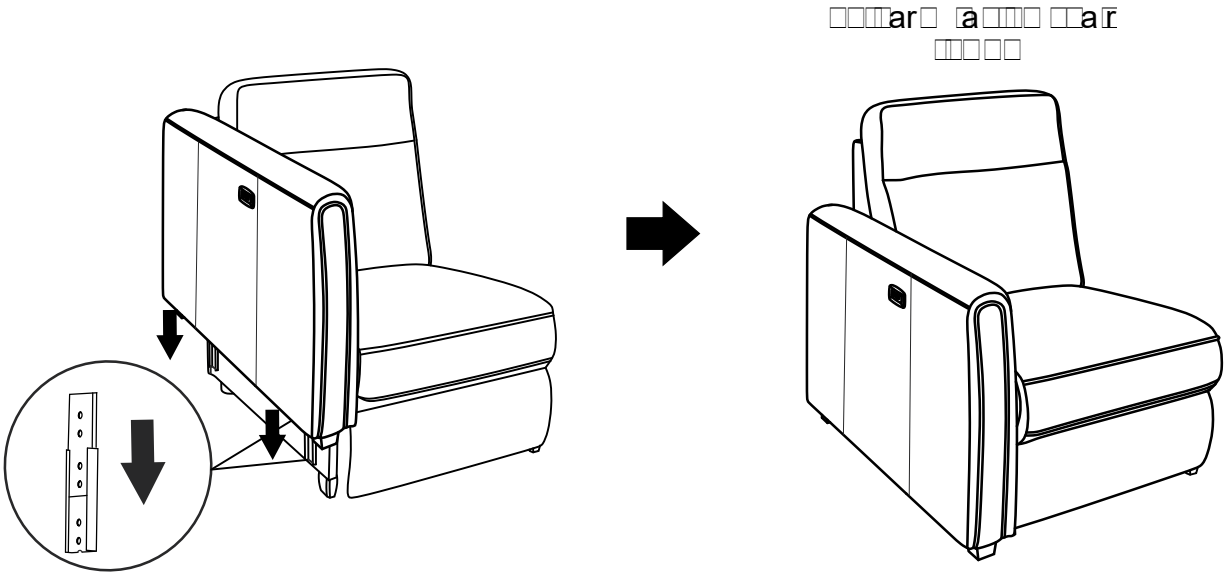

Step 6. Combination 1: Double Power Reclining Loveseat Assembly.

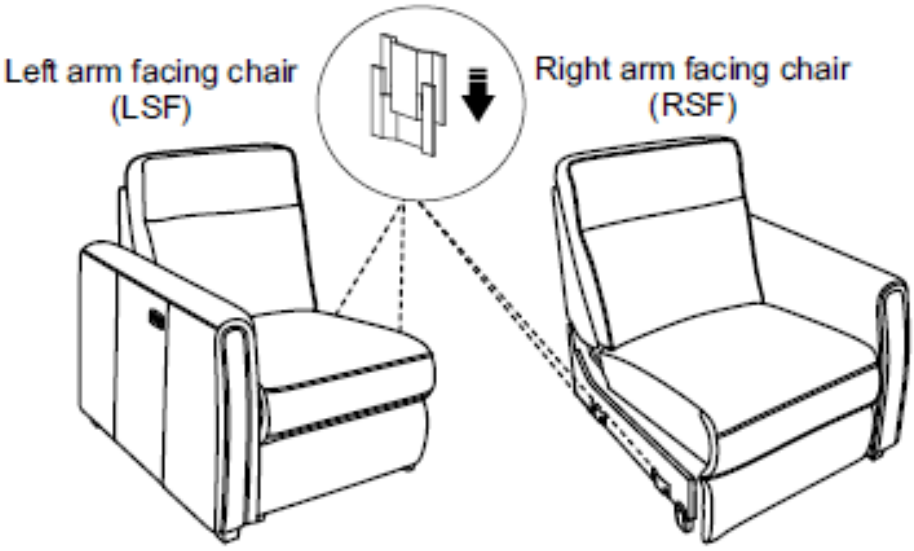

MADE IN VIET NAM

Step 7: Power Connection.

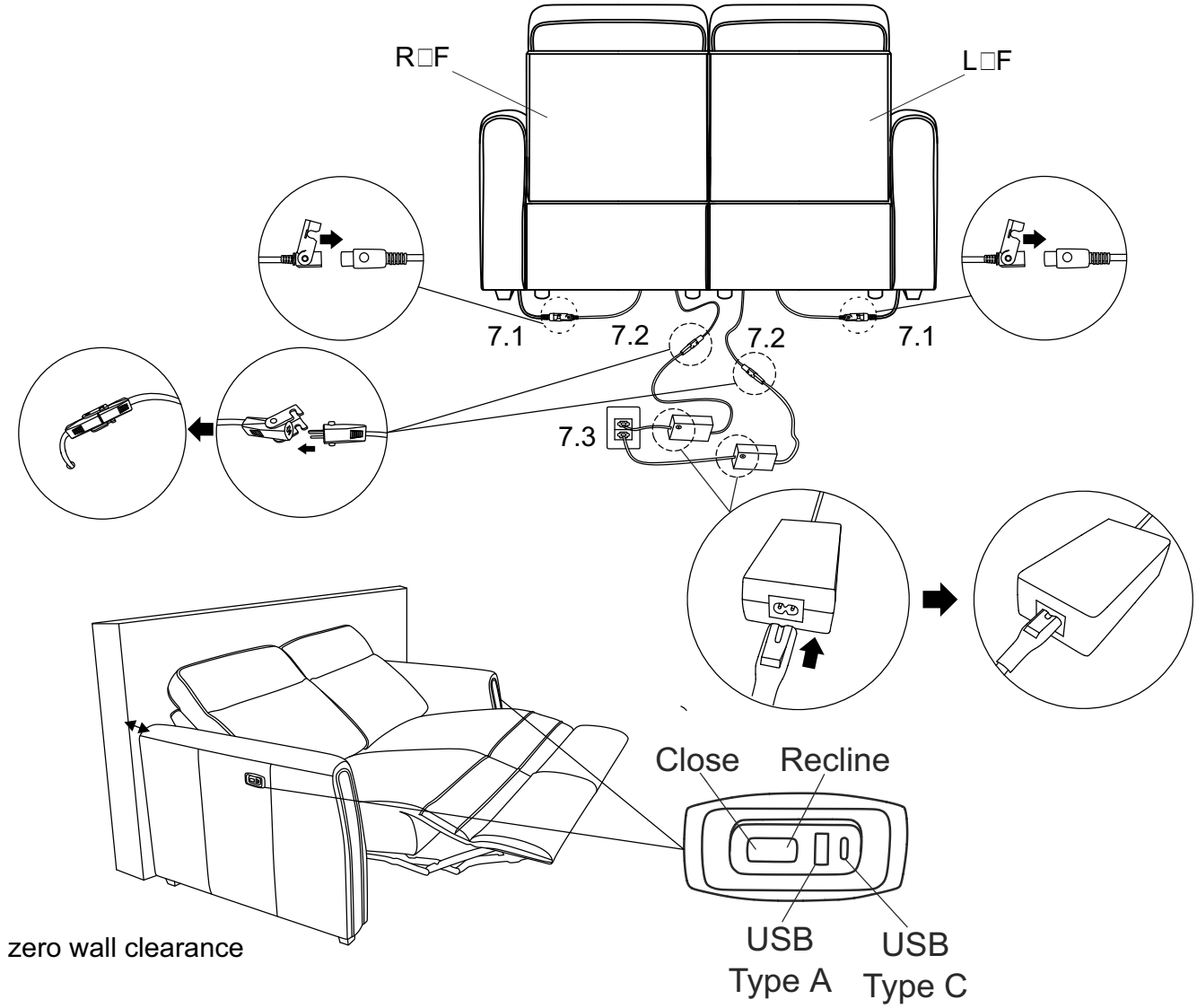

Step 8. Combination 2: Double Power Reclining Sofa Assembly.

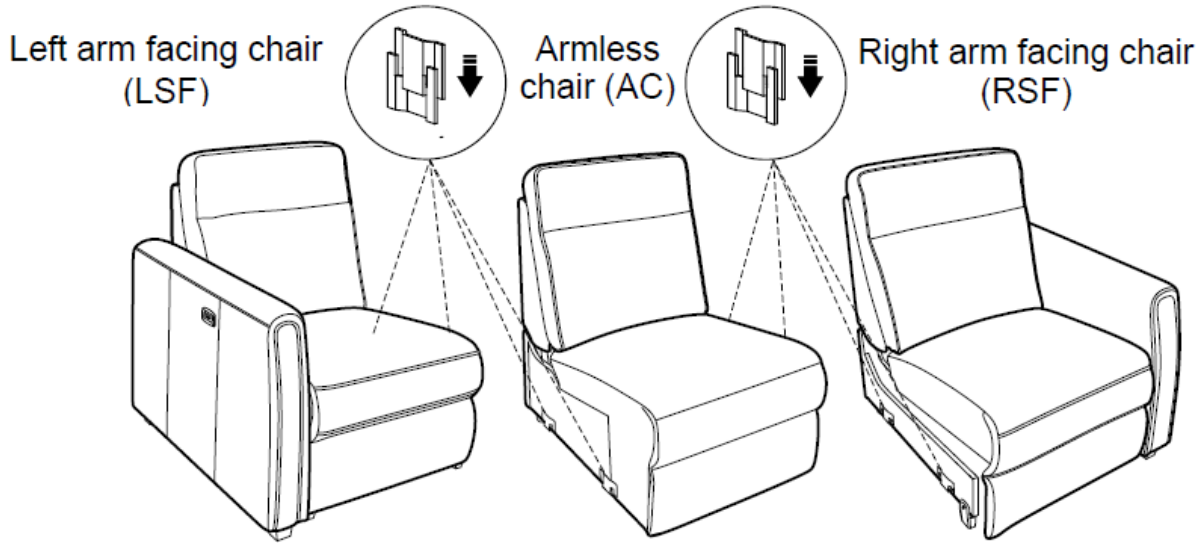

MADE IN VIET NAM

Step 9: Power Connection.

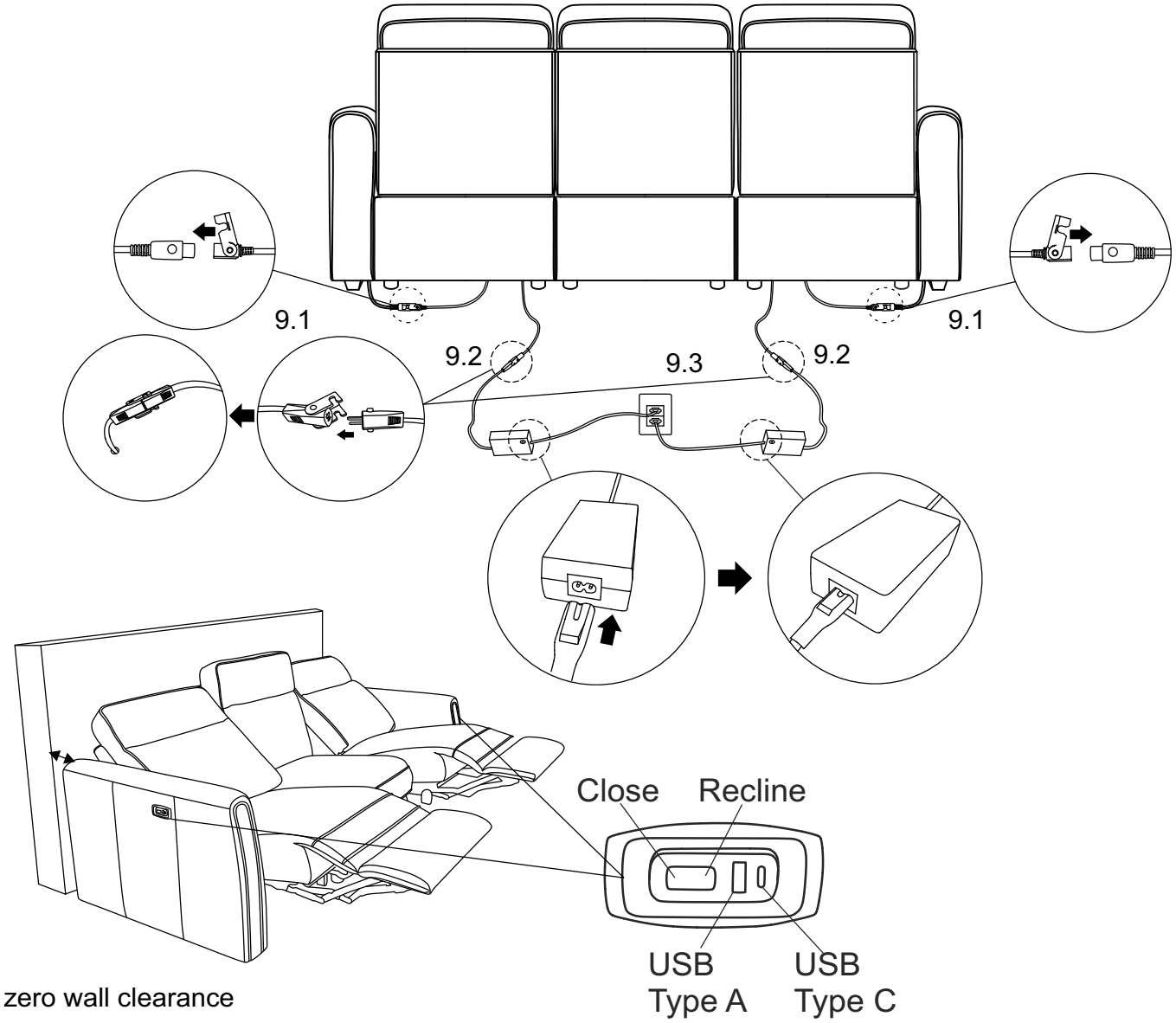

CARE INSTRUCTIONS FOR AIR LEATHER:

To maintain the original appearance of your fabric furniture, please follow the simple care procedures below:

- Avoid exposing furniture directly to sunlight or heating and air conditioning outlets. Exposure to sunlight or heating and air conditioning outlets will fade/damage fabric.
- Wipe gently with a damp soft cloth to remove dust, dirt and any grime build up.

⚠ It is recommended to install protective pads under all legs and supports to avoid damage or scratches when placing furniture on a wood floor or other hard surface, and to limit indentation and prevent discoloration if placing on carpet.

PLEASE KEEP ASSEMBLY INSTRUCTION FOR FUTURE REFERENCE

MADE IN VIET NAM

ASSEMBLY INSTRUCTIONS

POWER RIGHT SIDE RECLINING CHAIR
2 BACKRESTS OF LEFT SIDE AND RIGHT SIDE POWER RECLINING CHAIRS

WARNING:

- Keep hands, feet, and children away from moving parts.
- Ensure the area behind and under the chair is clear before operating.
- Do not allow children to operate the recliner.

Note: Do not use power tools for assembly. Power tools increase the risk of over-tightening, which may lead to splitting or cracking the wood.

COMPONENT LIST

NO.	DRAWING	Q.TY	DESCRIPTION
A		1PC	SEAT BASE
B		1PC	BACK REST ITEM NO: 8368BRW-B, 8368NVY-B (in the other carton)
C		2PCS	PLASTIC LEG (Ø60*80mm)
D		2PCS	PLASTIC LEG (30*60*90mm)

NO.	DRAWING	Q.TY	DESCRIPTION
1		2PCS	BOLT (1/4*25)
2		4PCS	BOLT (1/4*20)
3		2PCS	METAL PLATE
4		1PC	ALLEN KEY (4/23")
5	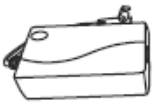	1PC	ADAPTER
6	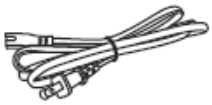	1PC	POWER CORD

MADE IN VIET NAM

Please follow the drawings below to assemble the item.

Step 1.

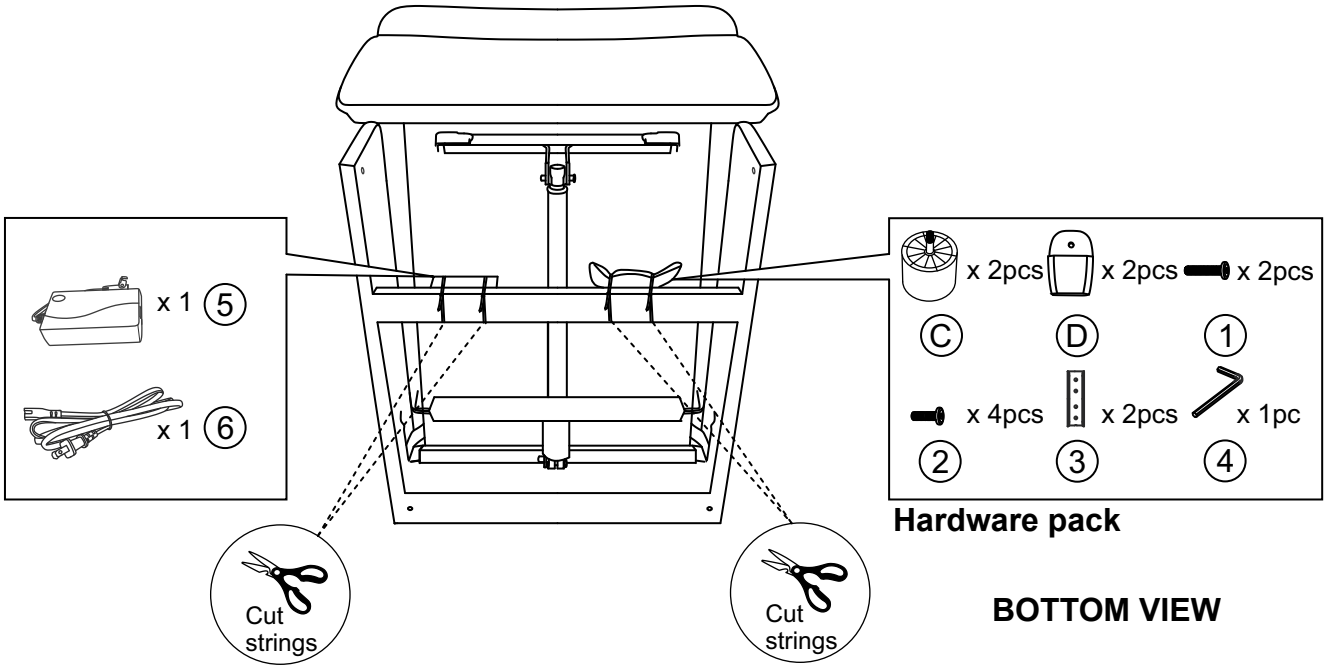

Step 2.

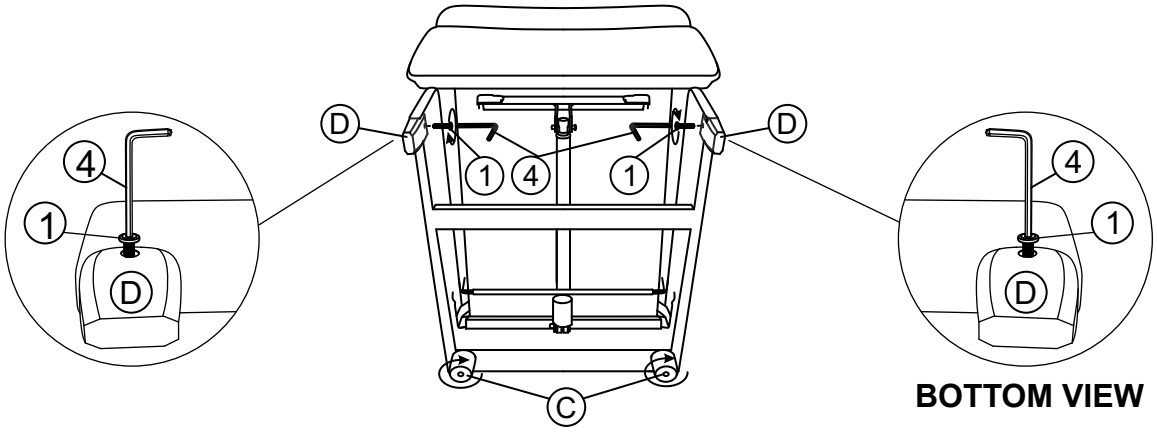

Step 3.

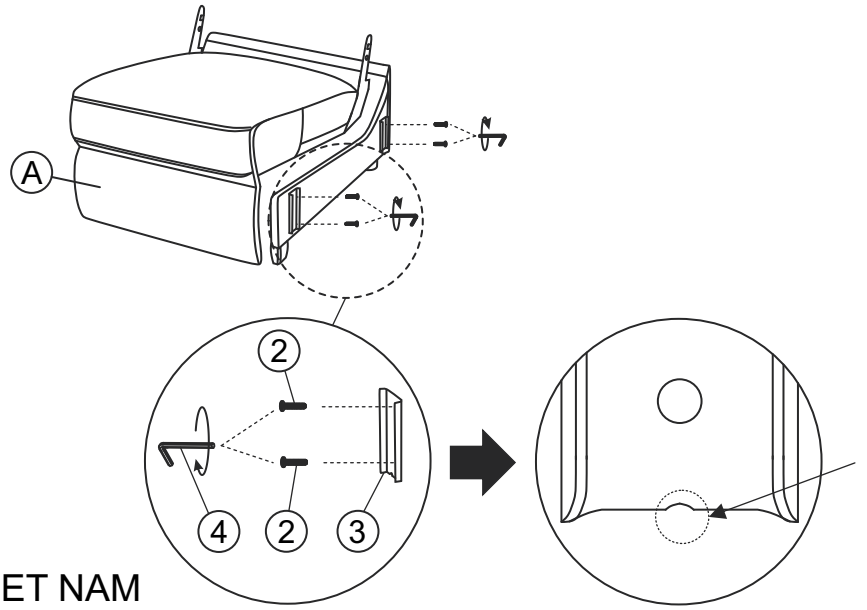

Note: Install the metal plate with the notched end facing downwards

MADE IN VIET NAM

Step 4.

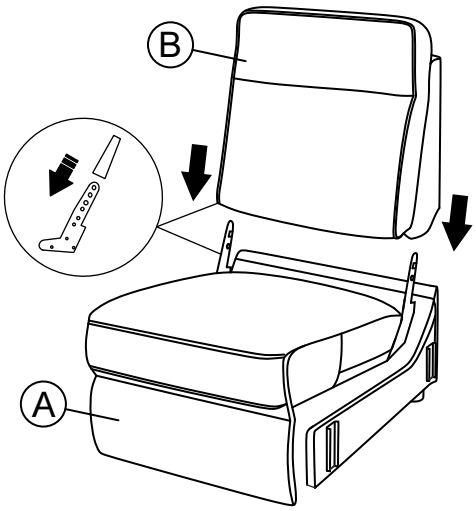

Step 5.

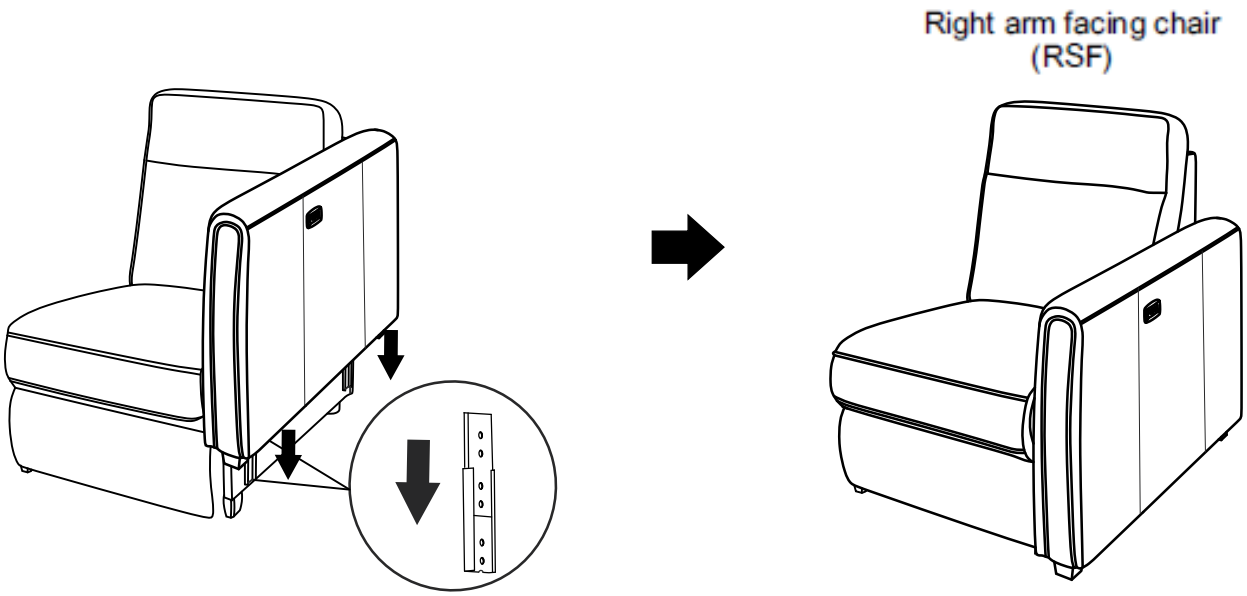

Step 6. Combination 1: Double Power Reclining Loveseat Assembly.

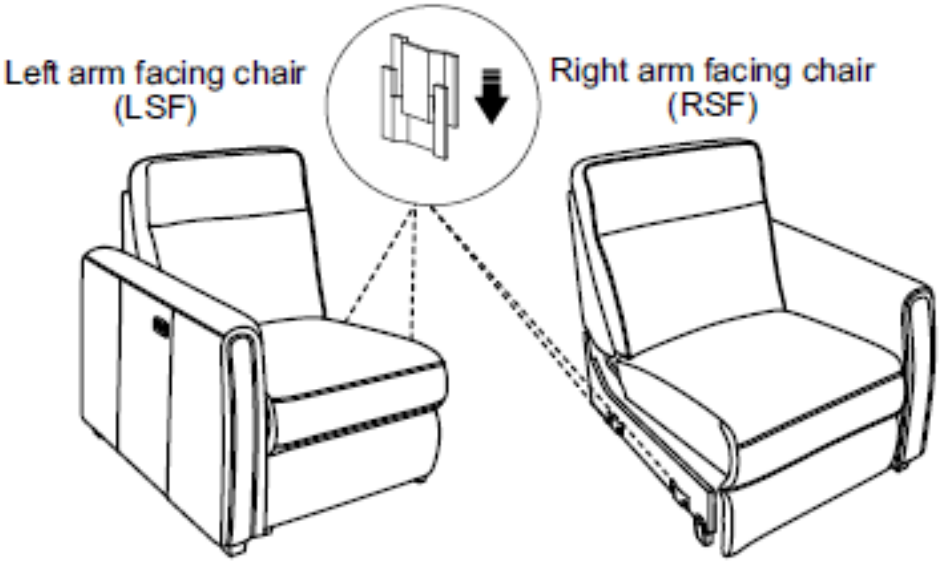

MADE IN VIET NAM

Step 7: Power Connection.

R□F

L□F

7.1

7.2

7.2

7.1

7.3

Close

Recline

USB Type A

USB Type C

zero wall clearance

Step 8. Combination 2: Double Power Reclining Sofa Assembly.

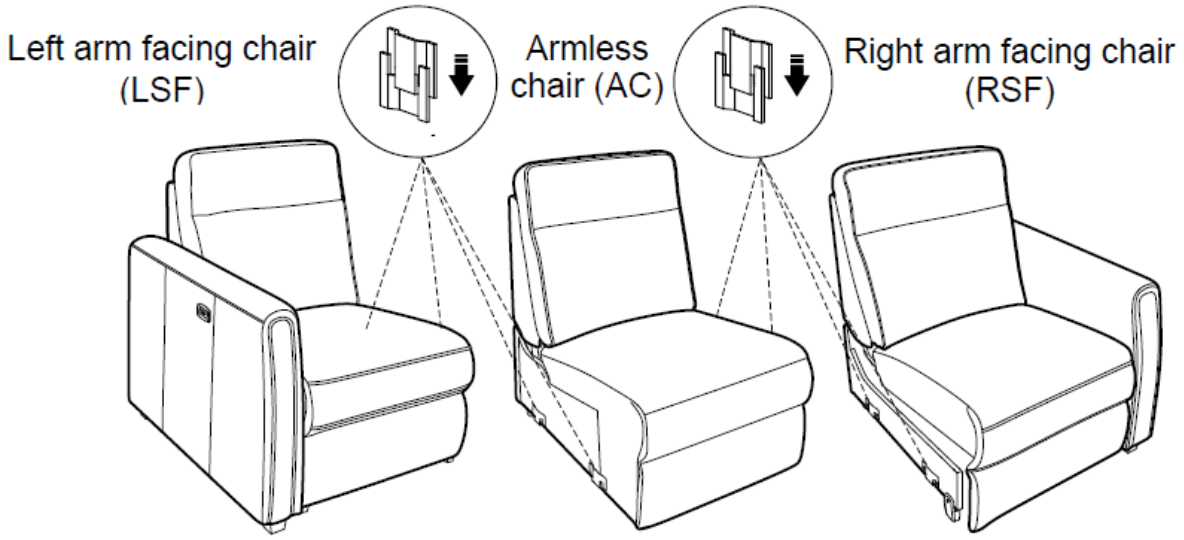

MADE IN VIET NAM

Step 9: Power Connection.

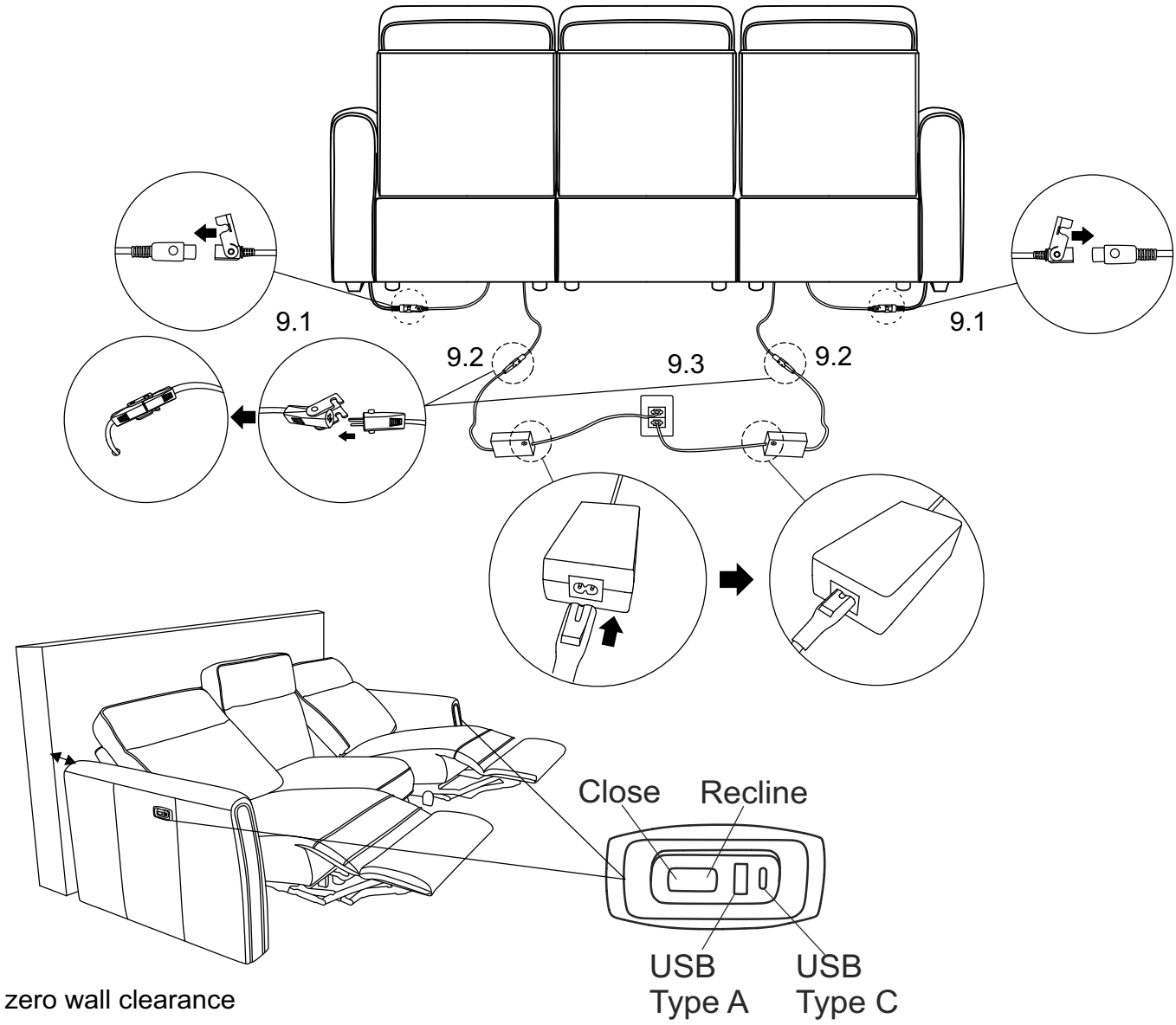

CARE INSTRUCTIONS FOR AIR LEATHER:

To maintain the original appearance of your fabric furniture, please follow the simple care procedures below:

- Avoid exposing furniture directly to sunlight or heating and air conditioning outlets. Exposure to sunlight or heating and air conditioning outlets will fade/damage fabric.
- Wipe gently with a damp soft cloth to remove dust, dirt and any grime build up.

⚠ It is recommended to install protective pads under all legs and supports to avoid damage or scratches when placing furniture on a wood floor or other hard surface, and to limit indentation and prevent discoloration if placing on carpet.

PLEASE KEEP ASSEMBLY INSTRUCTION FOR FUTURE REFERENCE

MADE IN VIET NAM

ASSEMBLY INSTRUCTIONS

ARMLESS CHAIR

WARNING:

- Keep hands, feet, and children away from moving parts.
- Ensure the area behind and under the chair is clear before operating.
- Do not allow children to operate the recliner.

Note: Do not use power tools for assembly. Power tools increase the risk of over-tightening, which may lead to splitting or cracking the wood.

COMPONENT LIST

NO.	DRAWING	Q.TY	DESCRIPTION
A	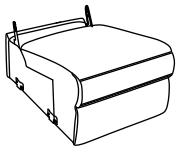	1PC	SEAT BASE
B		1PC	BACK REST
C	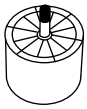	4PCS	PLASTIC LEG (Ø60*80mm)

Please follow the drawings below to assemble the item.

Step 1.

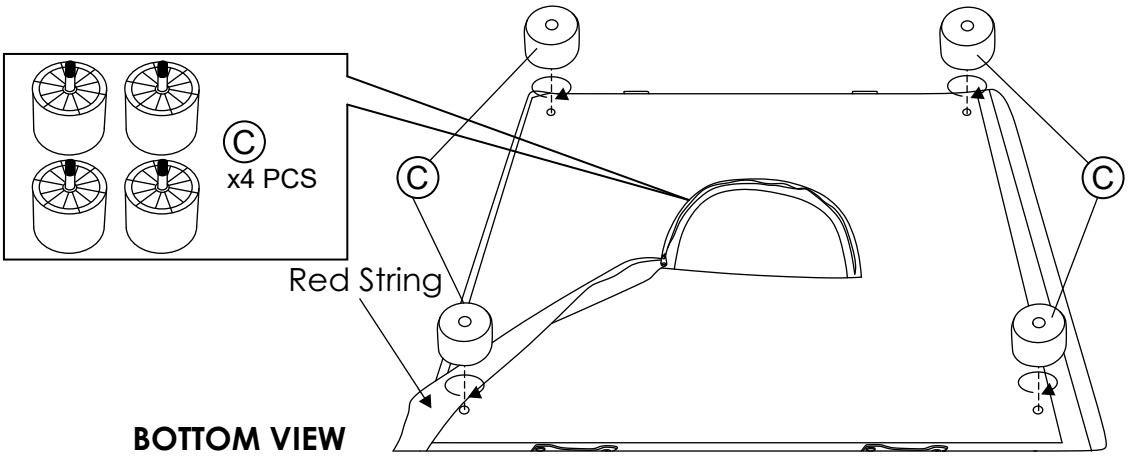

MADE IN VIET NAM

Step 2.

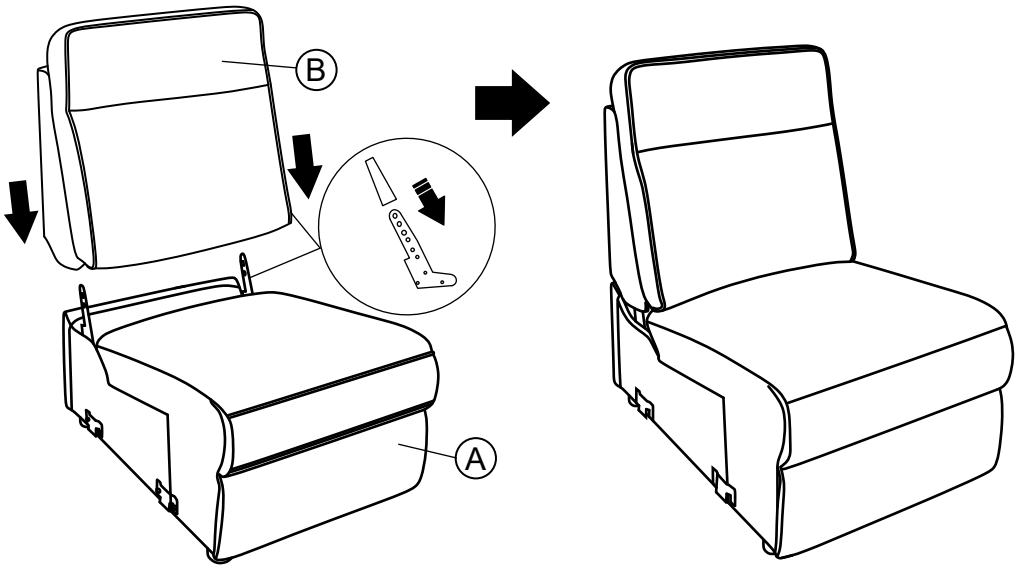

Step 3. Combination 1: Double Power Reclining Sofa (LSF + AC + RSF)

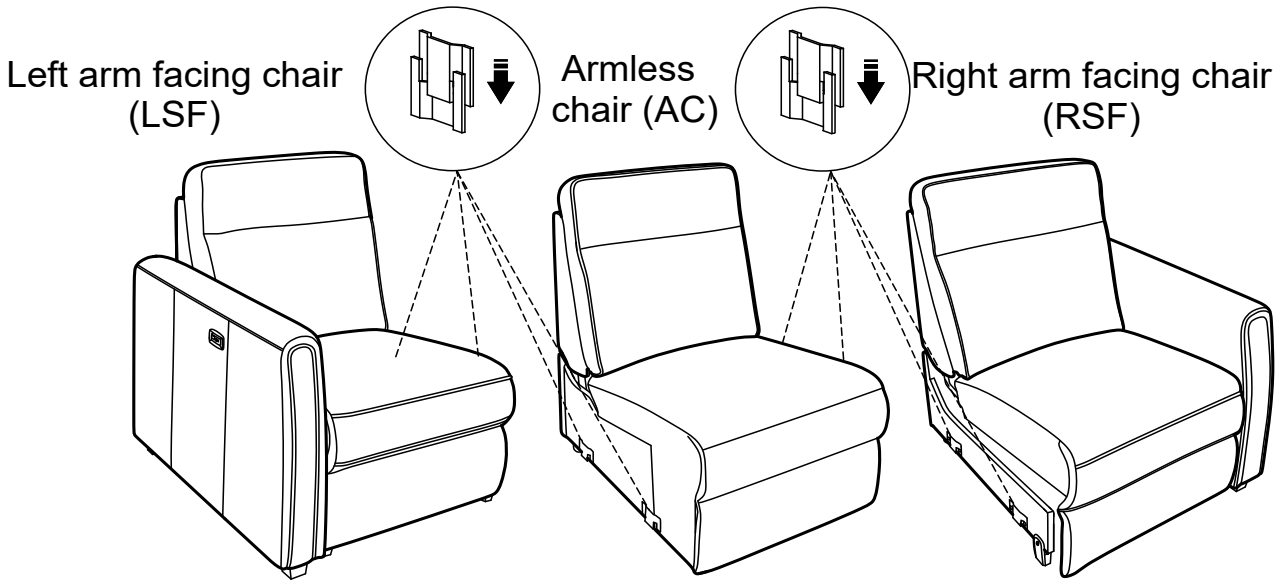

MADE IN VIET NAM

Step 4: Power Connection.

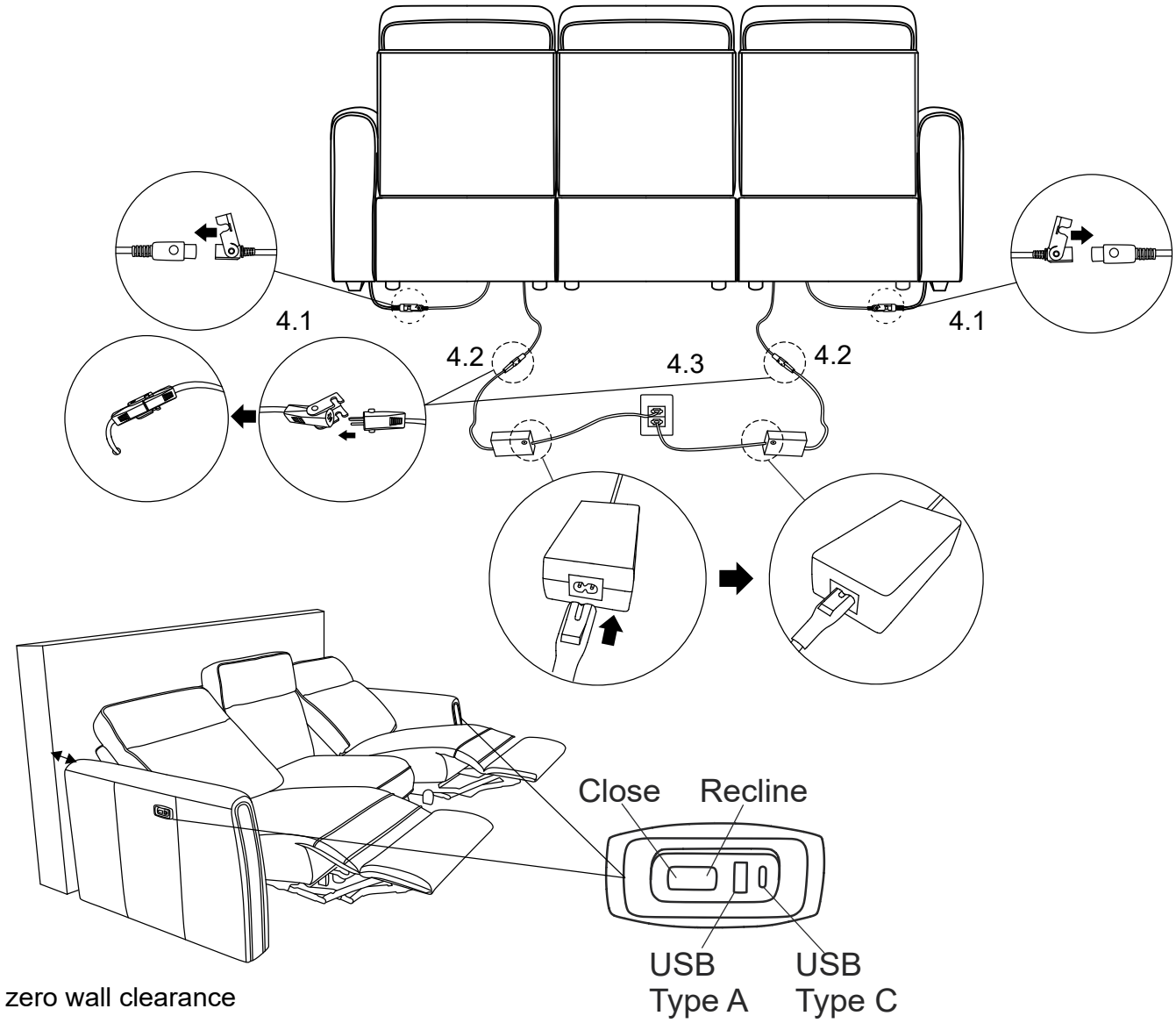

CARE INSTRUCTIONS FOR AIR LEATHER:

To maintain the original appearance of your fabric furniture, please follow the simple care procedures below:

- Avoid exposing furniture directly to sunlight or heating and air conditioning outlets. Exposure to sunlight or heating and air conditioning outlets will fade/damage fabric.
- Wipe gently with a damp soft cloth to remove dust, dirt and any grime build up.

⚠ It is recommended to install protective pads under all legs and supports to avoid damage or scratches when placing furniture on a wood floor or other hard surface, and to limit indentation and prevent discoloration if placing on carpet.

PLEASE KEEP ASSEMBLY INSTRUCTION FOR FUTURE REFERENCE

MADE IN VIET NAM