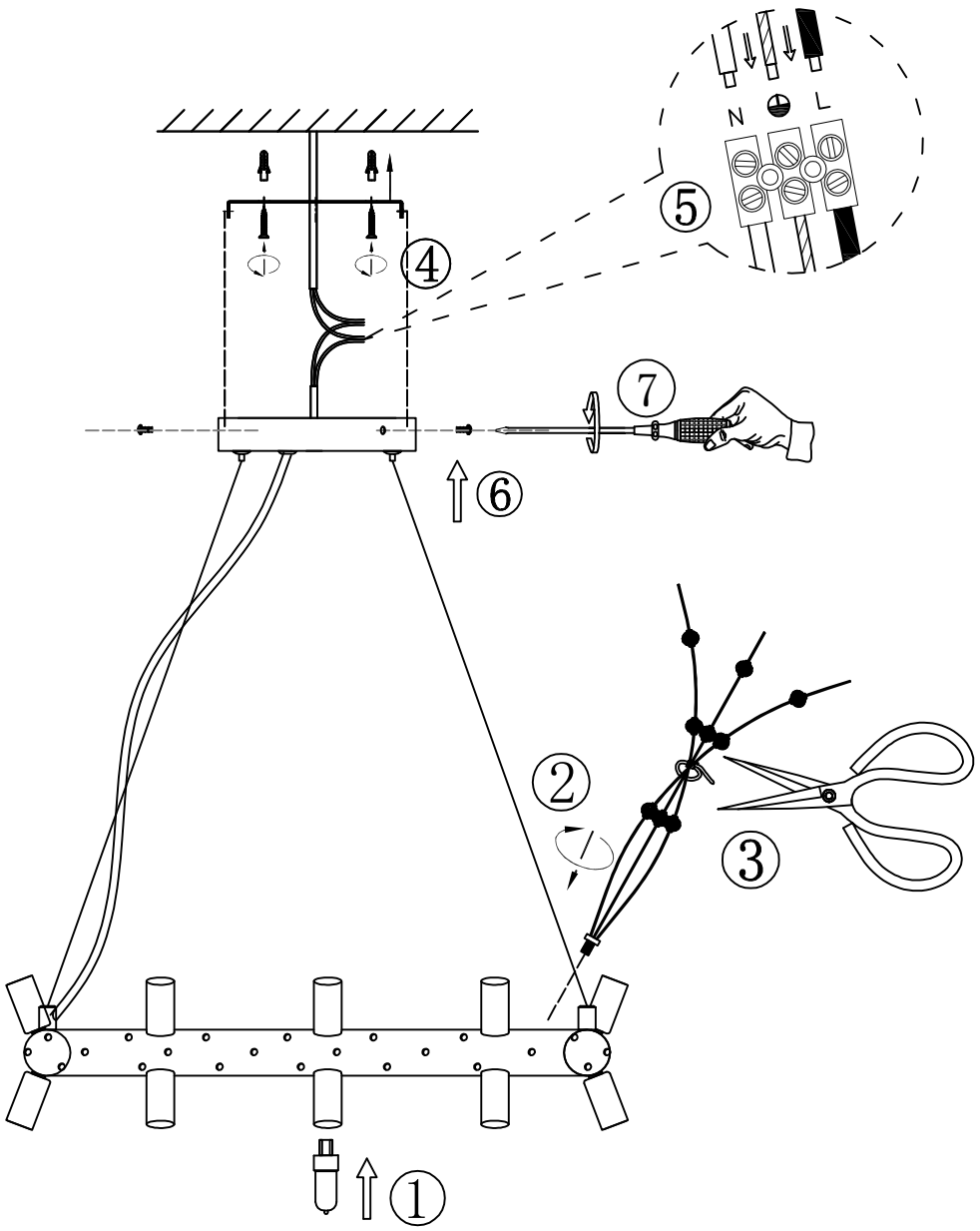

Installation steps:

1. Insert the bulb into the lamp head

2: Screw all the decorative beads into the hole reserved in the lamp body

3. Cut the cable ties that bind the crystal branches

4; Fix the panel to the junction box with the screws from the fitting bag

5. Connect the main line on the suction top with the reserved line on the ceiling with a wiring cap

6. Cover the ceiling plate on the hanging plate (align the side holes of the ceiling plate with the holes of the hanging plate)

7. Align the screws with the hanging plate and tighten

Attention:

1. Please cut off the power supply before installation to prevent electric shock
(installation by certified electrician is recommended)

2. Due to the different display,
the actual color can be different from the image

3. Due to the manual measurement of lamp body size,
there may be a deviation of 1 / 2 inch

4. If you have any questions or lost parts, please feel free to contact us and we will try our best to help you