Dimensions

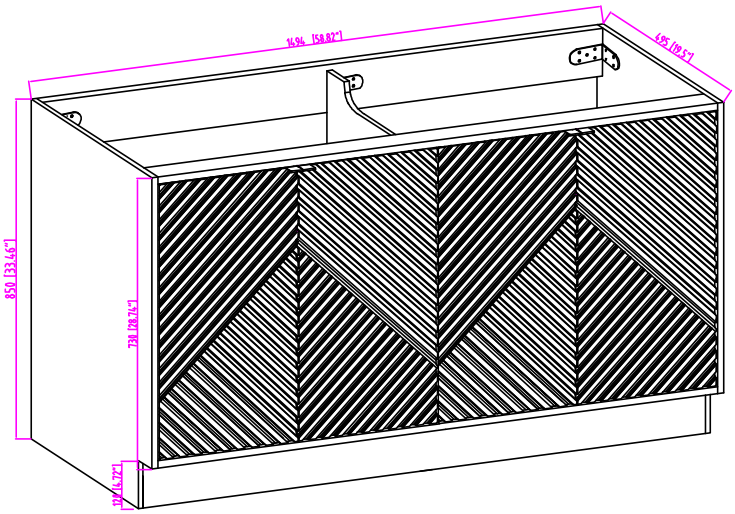
1494 [58.82"]
495 [19.5"]
850 [33.46"]
738 [29.06"]
120 [4.72"]

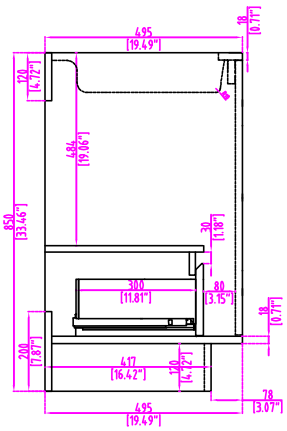
495
[19.49"]
18
[0.71"]
120
[4.72"]
484
[19.06"]
850
[33.46"]
30
[1.18"]
300
[11.81"]
80
[3.15"]
200
[7.87"]
417
[16.42"]
120
[4.72"]
78
[3.07"]

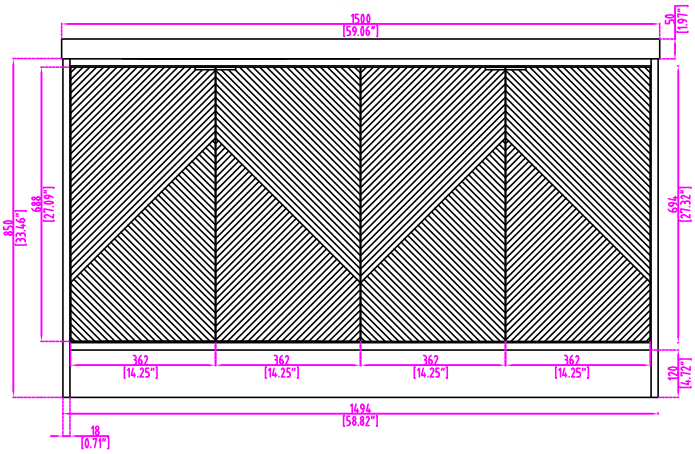
1500
[59.06"]
50
[1.97"]
850
[33.46"]
488
[19.19"]
694
[27.32"]
362
[14.25"]
362
[14.25"]
362
[14.25"]
362
[14.25"]
120
[4.72"]
1494
[58.82"]
18
[0.71"]

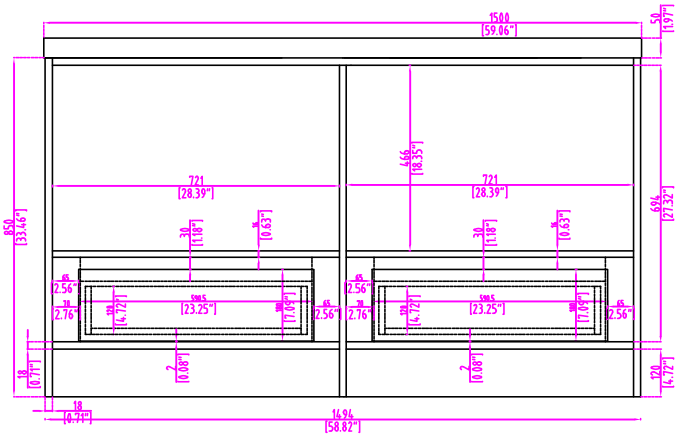
1500
[59.06"]
50
[1.97"]
466
[18.35"]
721
[28.39"]
721
[28.39"]
850
[33.46"]
694
[27.32"]
30
[1.18"]
16
[0.63"]
30
[1.18"]
16
[0.63"]
65
[2.56"]
70
[2.76"]
69
[4.72"]
594.5
[23.25"]
180
[7.09"]
65
[2.56"]
65
[2.56"]
70
[2.76"]
69
[4.72"]
594.5
[23.25"]
180
[7.09"]
65
[2.56"]
18
[0.71"]
2
[0.08"]
2
[0.08"]
120
[4.72"]
18
[0.71"]
1494
[58.82"]

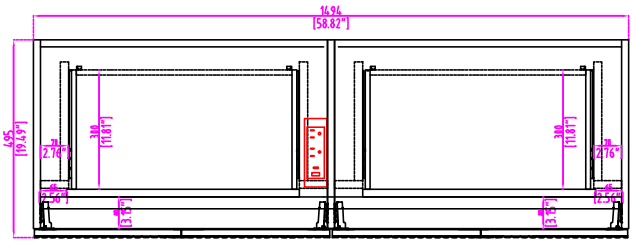
1494
[58.82"]
495
[19.49"]
70
[2.76"]
300
[11.81"]
300
[11.81"]
70
[2.76"]
65
[2.56"]
80
[3.15"]
80
[3.15"]
65
[2.56"]

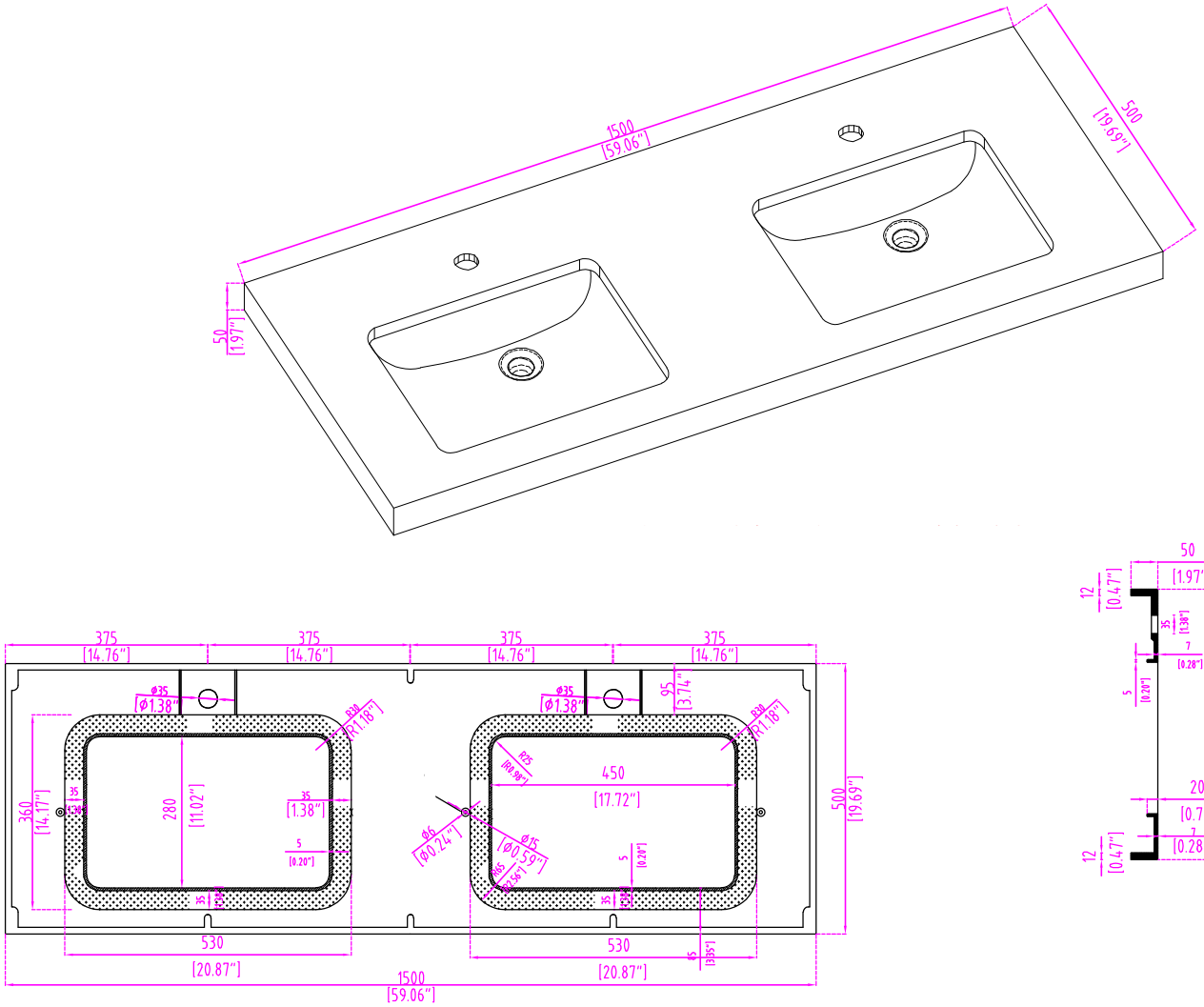
1500
[59.06"]
500
[19.69"]
50
[1.97"]
375
[14.76"]
375
[14.76"]
375
[14.76"]
375
[14.76"]
Ø35
[Ø1.38"]
R30
[R1.18"]
95
[3.74"]
360
[14.17"]
35
[1.38"]
280
[11.02"]
35
[1.38"]
5
[0.20"]
35
[1.38"]
R25
[R0.98"]
450
[17.72"]
Ø6
[Ø0.24"]
Ø15
[Ø0.59"]
R15
[R0.59"]
5
[0.20"]
35
[1.38"]
500
[19.69"]
530
[20.87"]
530
[20.87"]
5
[0.20"]
1500
[59.06"]
50
[1.97"]
12
[0.47"]
35
[1.38"]
7
[0.28"]
5
[0.20"]
500
[19.69"]
20
[0.79"]
7
[0.28"]
12
[0.47"]