BAMBOO FLOOR CABINET SLIM

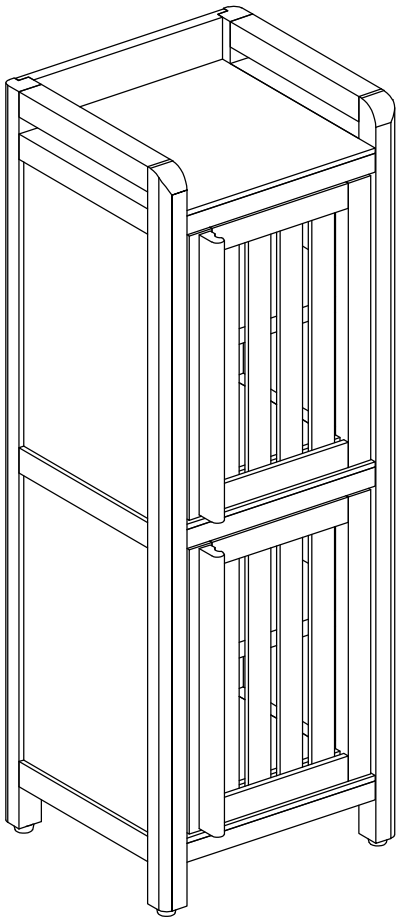

W2207P563295

Getting started

Thank you for purchasing this product. Read the instructions and warnings carefully before use, to ensure safe and satisfactory operation of this product.

WARNING

- Do not let any sharp objects touch or rub the surface of the product.
- When assembling, do not let children play around the working area.
- Please confirm all parts are correct before starting the assembly process.
- Do not tighten all bolts and screws completely until the entire unit has been assembled and set up.
- **DO NOT USE POWER TOOLS.**
- Power tools can over tighten screws and strip threads.
- For each screw:

1.Tighten each screw until you meet resistance.
2.Tighten one additional full rotation. DO NOT OVER TIGHTEN.

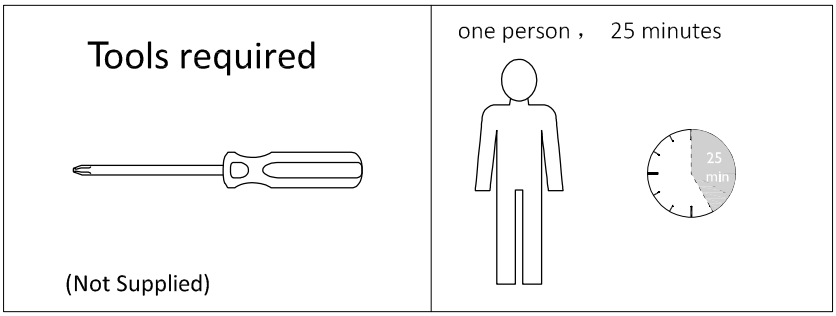

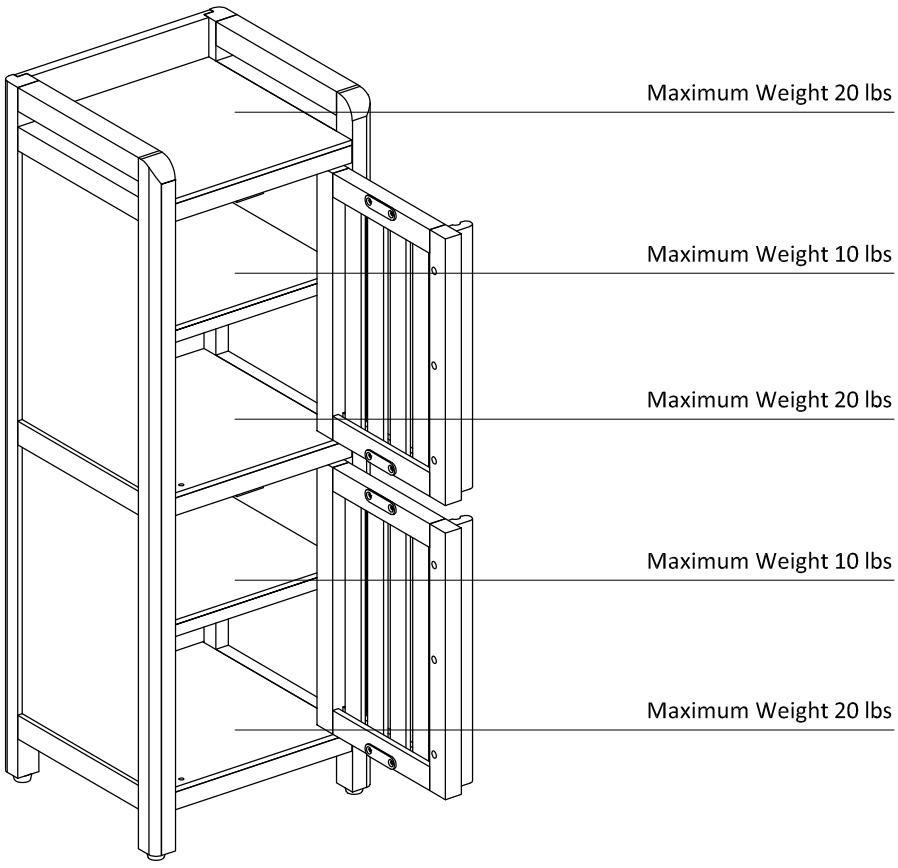

Fittings and parts checklist

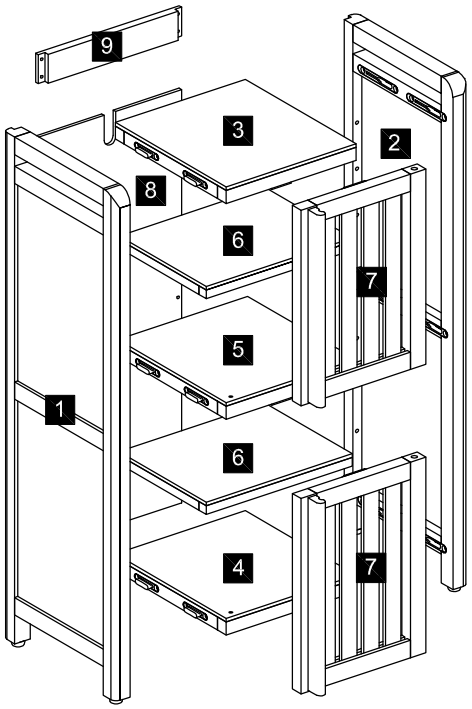

No.	Picture	Name	Qty	No.	Picture	Name	Qty
1	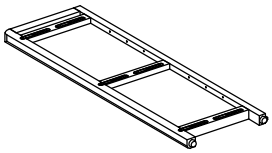	Left side frame	1	2	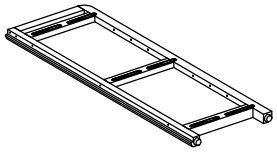	Right side frame	1
3	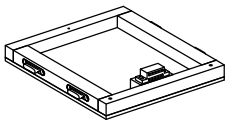	Top panel	1	4	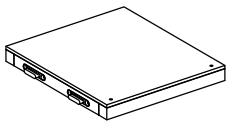	Bottom panel	1
5	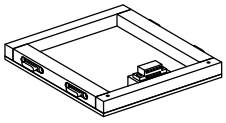	Fixed shelf	1	6	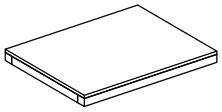	Adjustable shelf	2
7	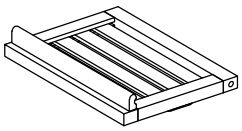	Door	2	8	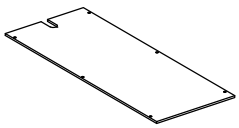	Back panel	1

No.	Picture	Name	Qty	No.	Picture	Name	Qty
9		Back rail	1	A	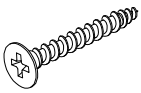	Screw	10
B		Shelf Support	8	C		Pin	5 (One spare)
D		Screw	1	E	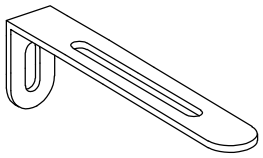	Metal'L' Bracket	1

Product assembly

Step 1

Parts, fittings and tools

1 2 3 4 5

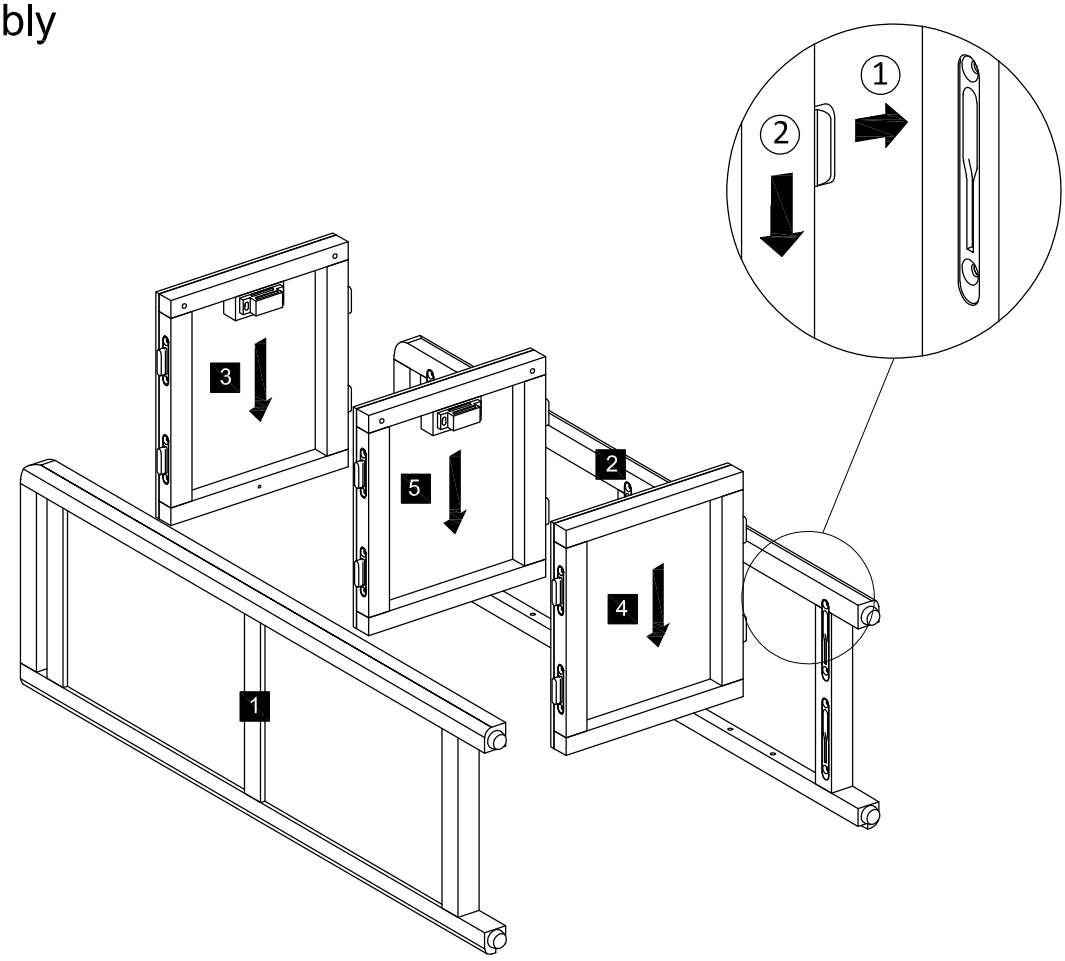

Step 2

Parts, fittings and tools

1 2 8 9 A

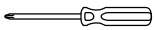

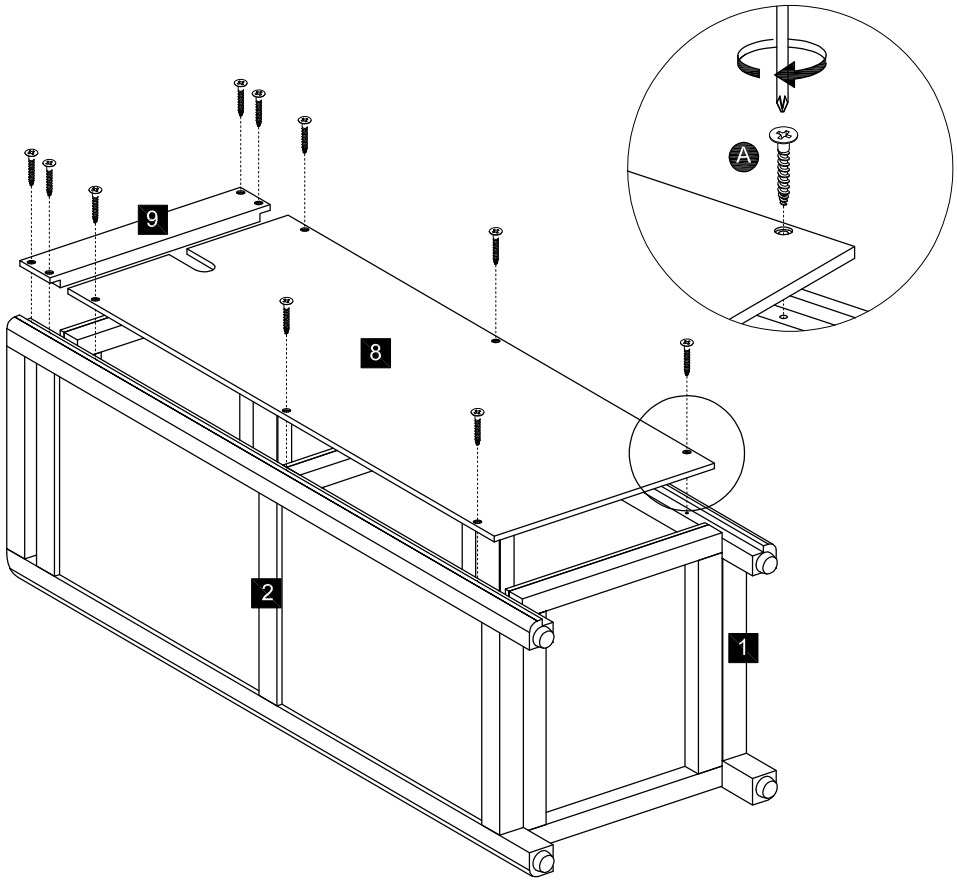

Step 3

Parts, fittings and tools

1 2 6 B

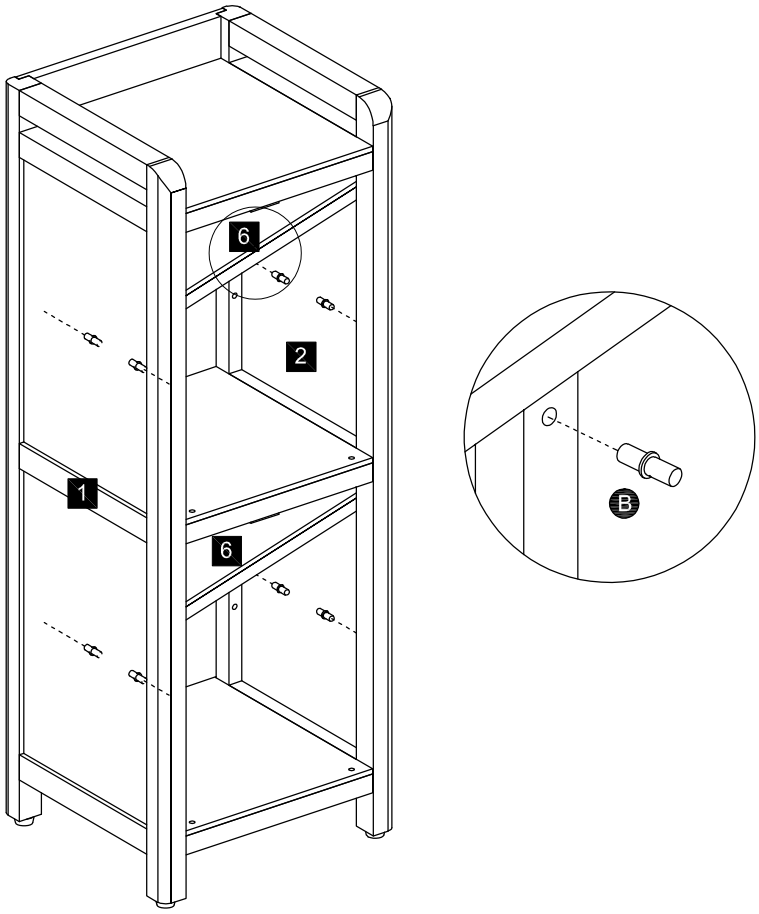

Step 4

Parts, fittings and tools

7 C

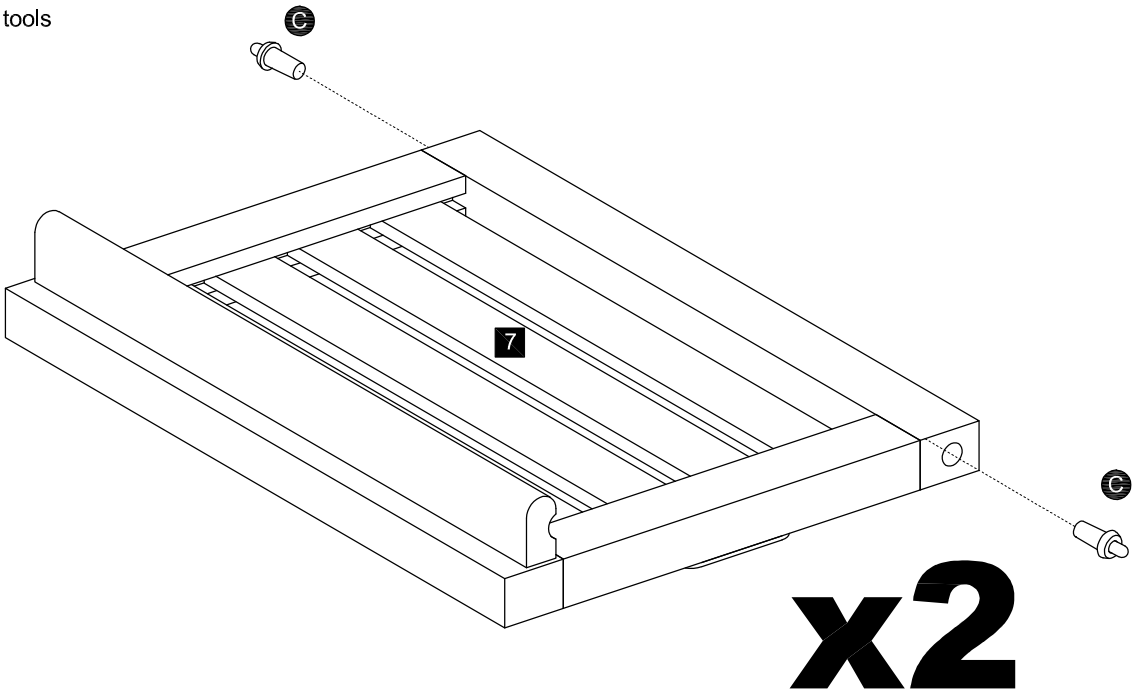

Step 5

Parts, fittings and tools

3 4 5 7

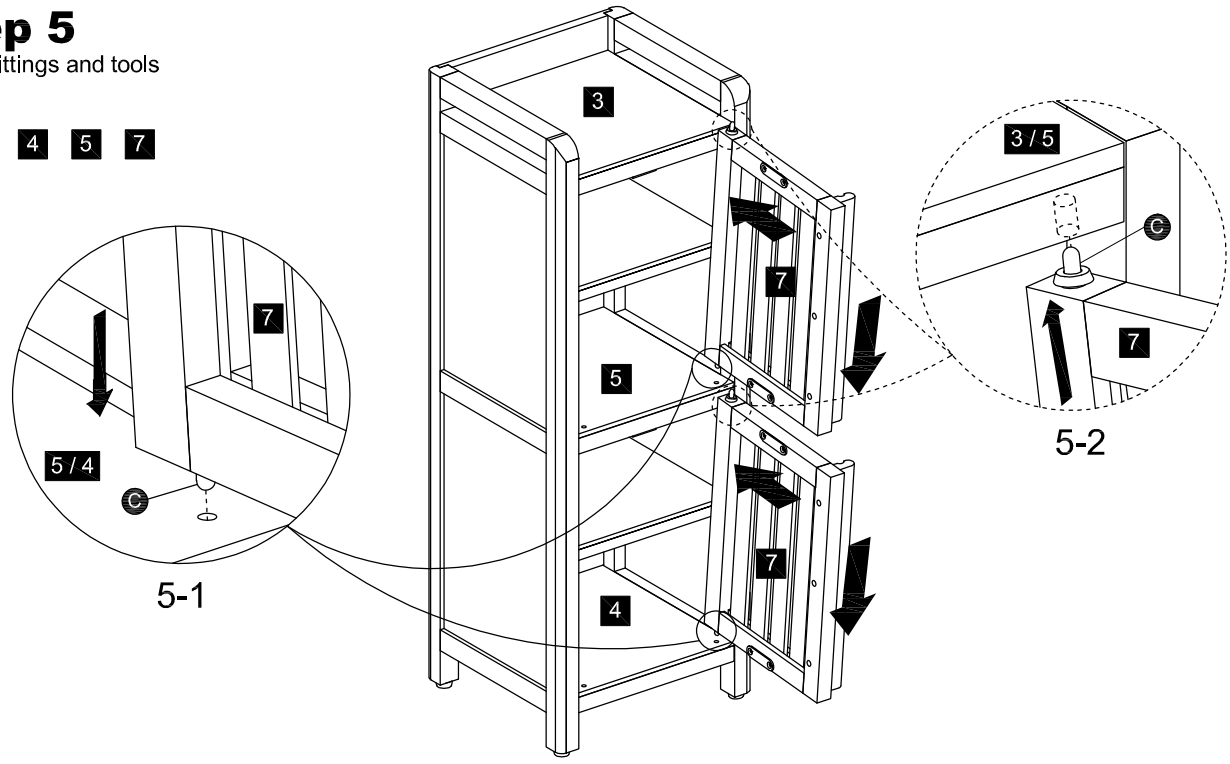

OR

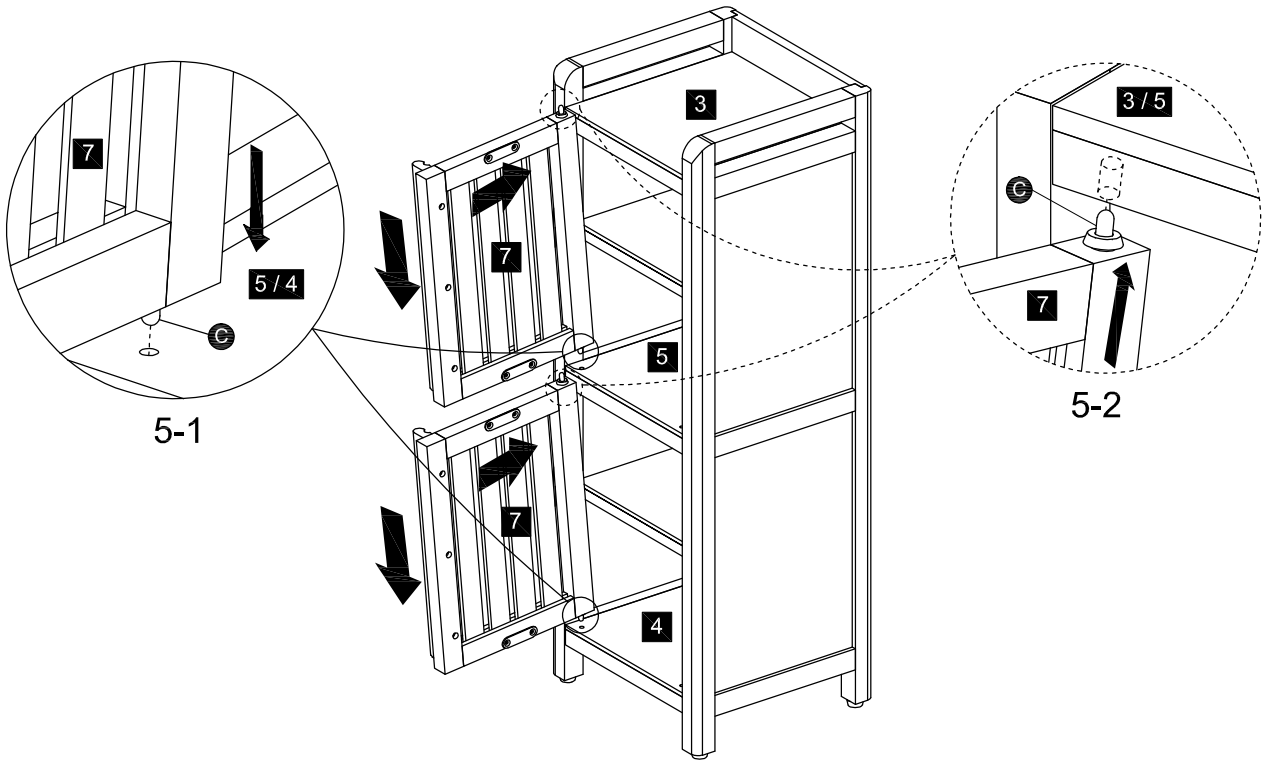

Step 6

Parts, fittings and tools

Use adjustable leveler if necessary.

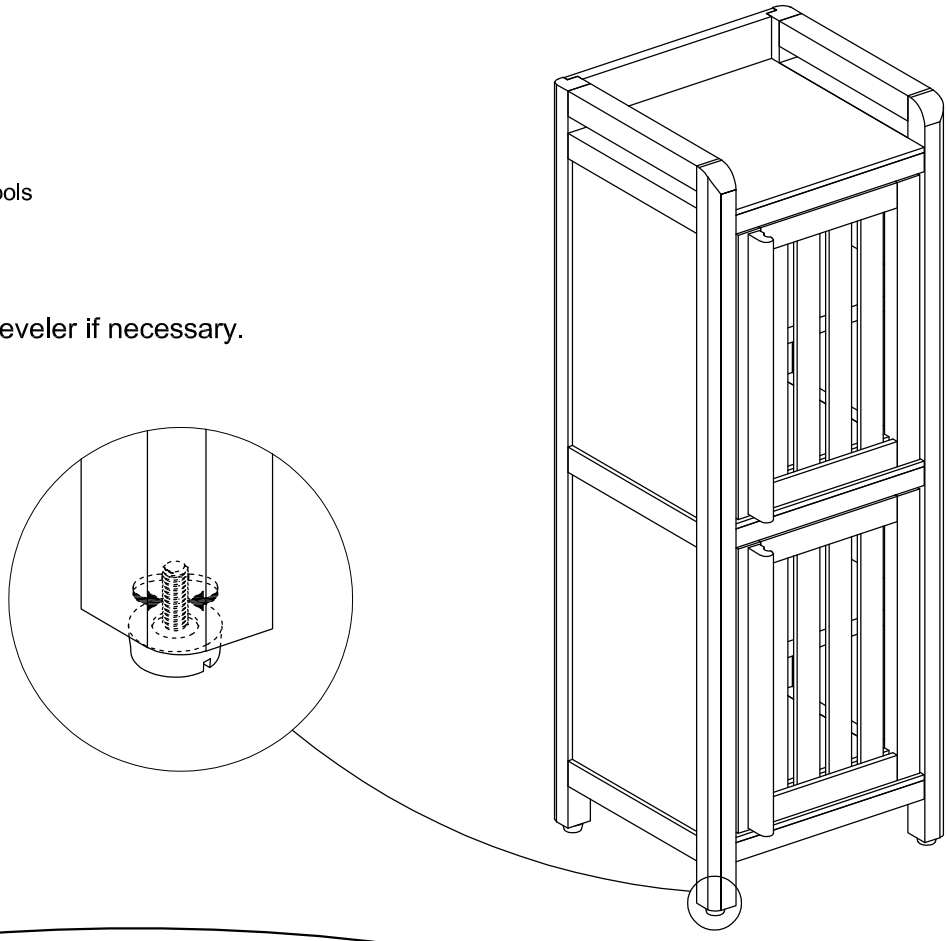

Step 7

Parts, fittings and tools

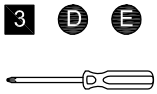

PLEASE NOTE: For your safety,to prevent the danger of this unit tipping over, it is important to attach the "L" shaped bracket to the wall using the correct wall fixing.

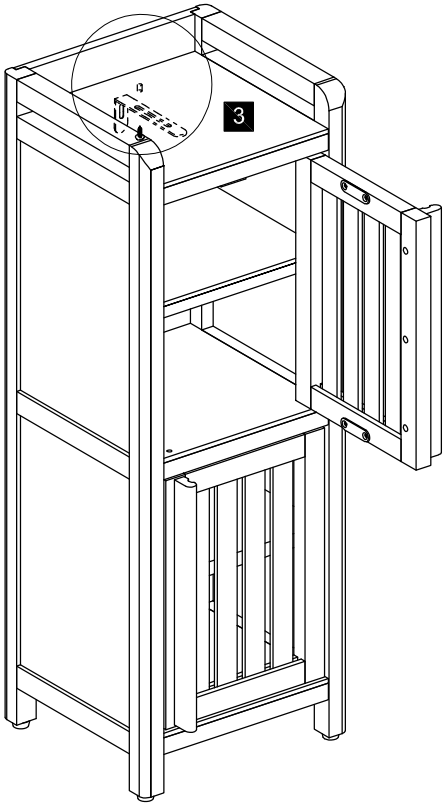

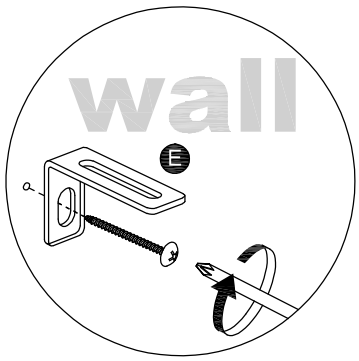

7-1

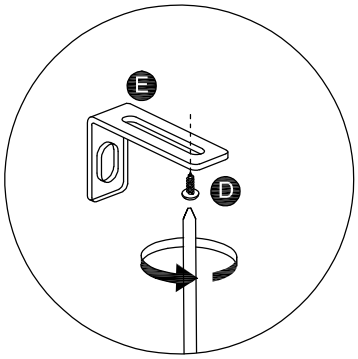

7-2