Date : 25-APR-2023

ASSEMBLY INSTRUCTIONS
Parlin Dining Chair Item# 29918

ASSEMBLY REQUIREMENTS	2-Person Assembly	30 Minutes Assembly Time (Approximate)	Tools Required: (Not Provided)	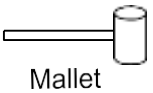 Mallet	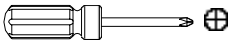 Phillips Screwdriver

Thank you for purchasing our product!

Please refer and use this assembly instruction to assemble the product.
Contact our customer service department in case there are any missing or damage parts or hardware.
Replacement parts are normally shipped within 2 or 3 days.

Email: replacementparts@buylateral.com
Within 30 days from delivery date

PRODUCTS PURCHASED THROUGH OUR AUTHORIZED VENDORS ONLY ARE ELIGIBLE FOR REPLACEMENT PARTS

We appreciate your business!

THIS PRODUCT IS FOR INDOOR AND HOUSEHOLD USE ONLY – NOT FOR COMMERCIAL USE.

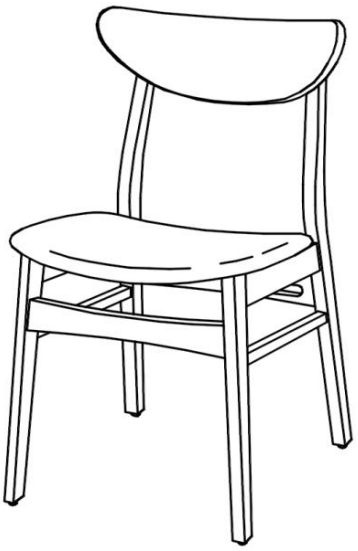

ASSEMBLY PREPARATION

1. Remove all packaging materials, staples and packing straps from the carton.
2. Refer to Parts List and Hardware List, and ensure parts and hardware are correct before assembly. Contact customer service for missing parts.
3. Place all wooden parts on a clean, flat and soft surface (e.g. carpet or rug) to prevent scratch and damage to parts.

SAFETY PRECAUTION

1. KEEP ALL HARDWARE PARTS OUT OF REACH OF CHILDREN.
2. DISPOSE PLASTIC PACKAGING MATERIAL IMMEDIATELY TO AVOID ANY RISK OF SUFFOCATION TO CHILDREN AND ANIMALS.

TIPS FOR ASSEMBLY

1. Allow ample room for assembly and in close proximity to where product will be placed.
2. Assemble the product on a surface that does not scratch or damage the exterior gloss and finish of the furniture.
3. Identify all of the parts, hardware and quantities required for each step.
4. During assembly, do not over-tighten any fittings as this may cause damage.
5. DO NOT USE POWER TOOLS TO ASSEMBLE THIS PRODUCT.
6. Always place the product on a flat, level surface.
7. Do not sit or stand on the partially assembled product; only use the product for which it is intended.

CARE AND MAINTENANCE

- Wipe clean with a soft, dry cloth; avoid the use of harsh chemicals or household cleaners as they may damage the exterior finish of the furniture.
- Hardware may loosen over time. Periodically, check that all connections are tight; re-tighten as necessary.
- Solid wood is impacted by heat and humidity fluctuations and may result in small joint separations or hairline cracks; place the furniture away from direct sunlight and air conditioning vents, heating vents or units to protect the furniture.

ASSEMBLY INSTRUCTIONS

Parlin Dining Chair Item# 29918

PARTS LIST (For 1 Chair)

Item	Description	Qty
1	Right Frame	1
2	Left Frame	1
3	Front Stretcher	1
4	Back Stretcher	1
5	Back Rest	1
6	Cushion Seat	1

HARDWARE LIST (For 1 Chair)

Item	Description	Part	Qty	Extra
A	JCBC M6 x 25mm + S/W M6 + F/W M6 x 13mm		4	1
B	JCBC M6 x 45mm + S/W M6 + F/W M6 x 13mm		4	1
C	Allen Key M4		1	
D	L-Bracket		4	
E	CSK Screw M3.5 x 12mm		8	1
F	Wood Dowel M8 x 25mm		2	1
G	Leg Stud 5/8" with Pin		4	1

Extra hardware for spare use.

STEP 1

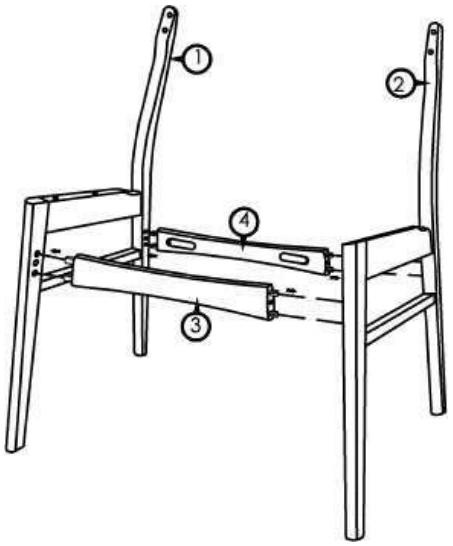

Attach Front Stretcher (3) and Back Stretcher (4) to Right Frame (1) and Left Frame (2) via pre-installed wood dowels on (3) & (4).

STEP 2

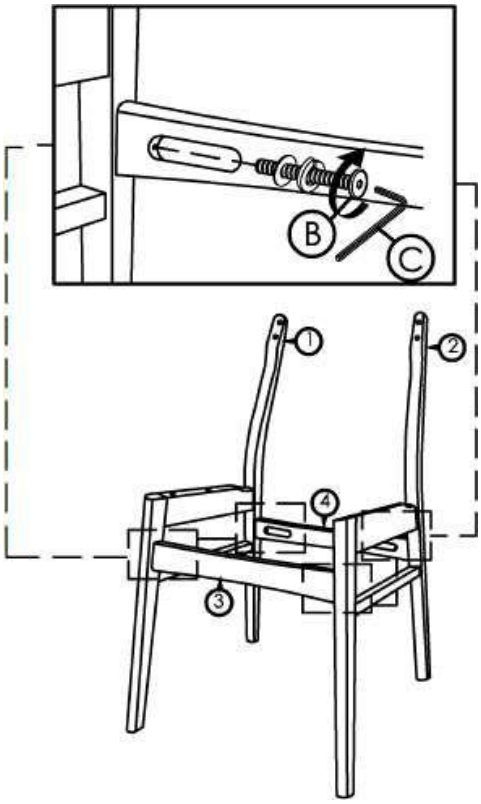

Insert JCBC Screw (B) fitted with Spring Washer and Flat Washer through the hole on Front Stretcher (3) and Back Stretcher (4) to screw into the hole on Right Frame (1) and Left Frame (2). Use Allen Key (C) to drive (B). Do not tighten completely at this time.

STEP 3

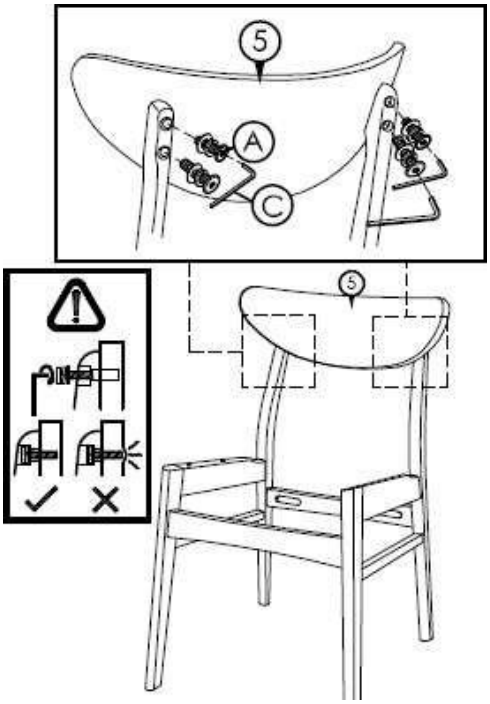

a) Align bolt holes on Backrest (5) to bolt holes on backrest support section of Left and Right Frame.
b) Insert JCBC Screw (A) fitted with Spring Washer and Flat Washer through the hole on backrest support section to screw into the hole on (5).Use Allen Key (C) to drive (A). Do not tighten the screws completely until all screws are in place. DO NOT FULLY TIGHTEN.
c) Fully tighten all 4 screws (B) from Step (2). DO NOT OVER-TIGHTEN.

STEP 4

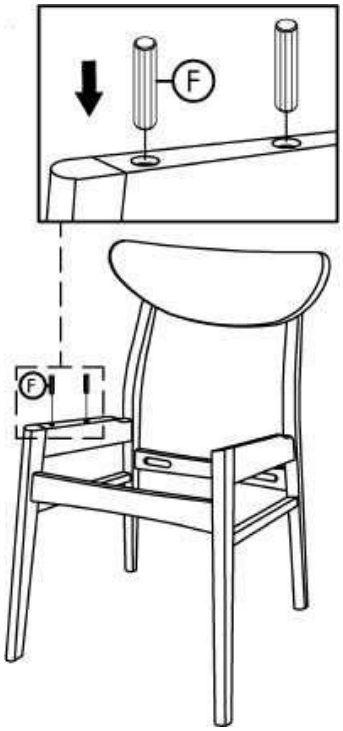

Insert Wood Dowel (F) into the designated hole on Right Frame as shown.

STEP *5*

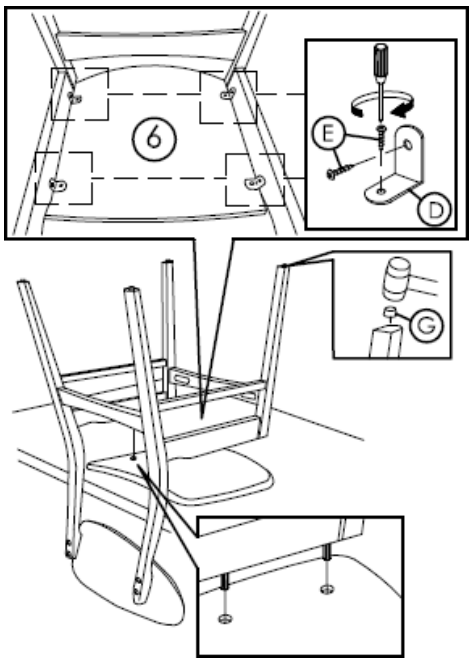

a) Place the Cushion Seat (6) bottom-side up on an elevated surface (e.g. table top).
b) Position the chair frame assembly as shown and attachto (6) via wood dowel on Right Frame.
c) Use Screw (E) and L-Bracket (D) to fasten (6) to Rightand Left Frame. Note the locations to fasten (D).
d) Use a mallet to lightly tap in Leg Stud (G) to the bottom of each Leg.

STEP 6

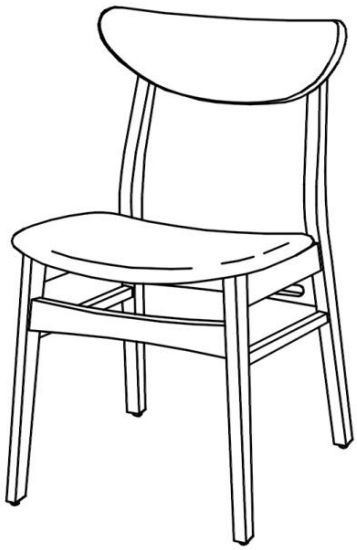

Set the chair right-side up.

The assembly of the chair is complete.