ASSEMBLY INSTRUCTION

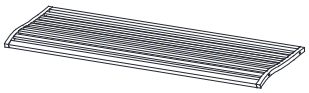
A×1PC


B×1PC

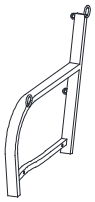
C×1PC

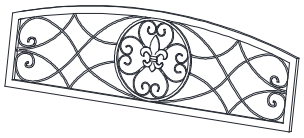
D×1PC


E×2PCS


F×6PCS


G×4PCS


H×4PCS


J×1PC

Step 1

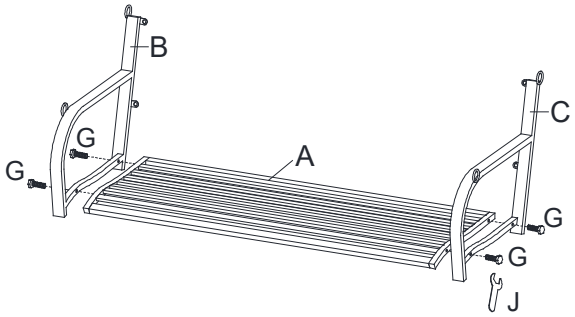

Step 2

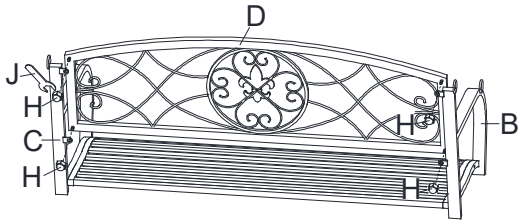

Step 3

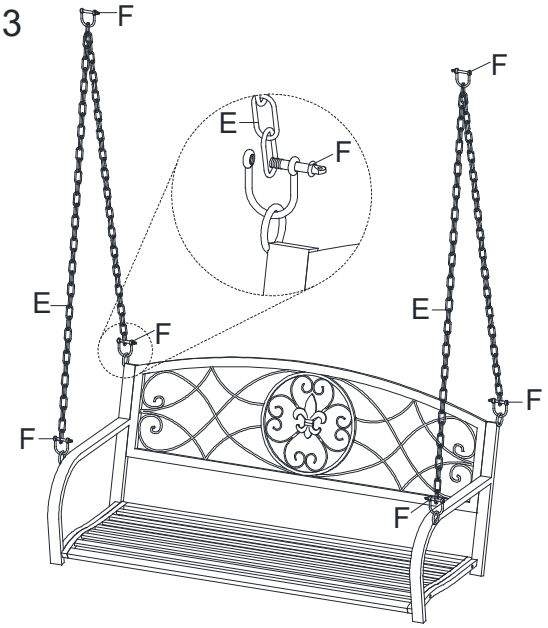

Step 4



⚠ WARNING

1. MAXIMUM LOAD: 200KG. SERIOUS INJURY OR DEATH MAY OCCUR IF OVERLOADE
2. PROHIBIT MORE THAN TWO PEOPLE ON THE CHAIR
3. PERIODICALLY CHECK TO ENSURE THAT ALL THE COMPONENTS ARE IN THEIR PROPER POSITION, FREE FROM DAMAGE, AND THAT ALL CONNECTIONS ARE TIGHT.