PEERLESS®

P2935LF-▲

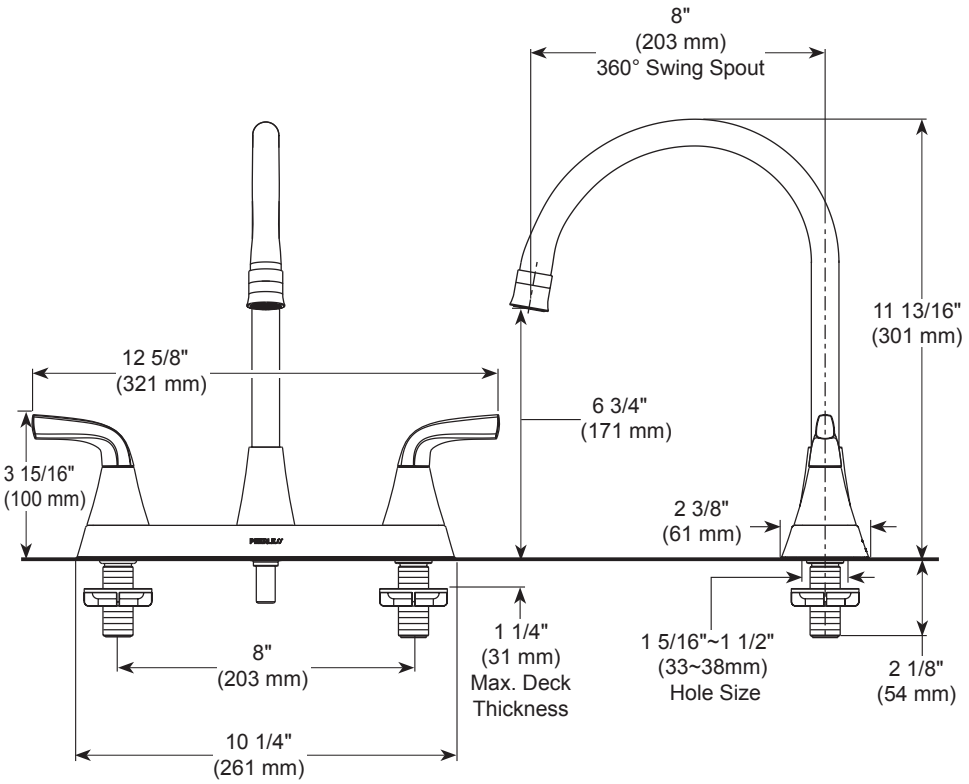

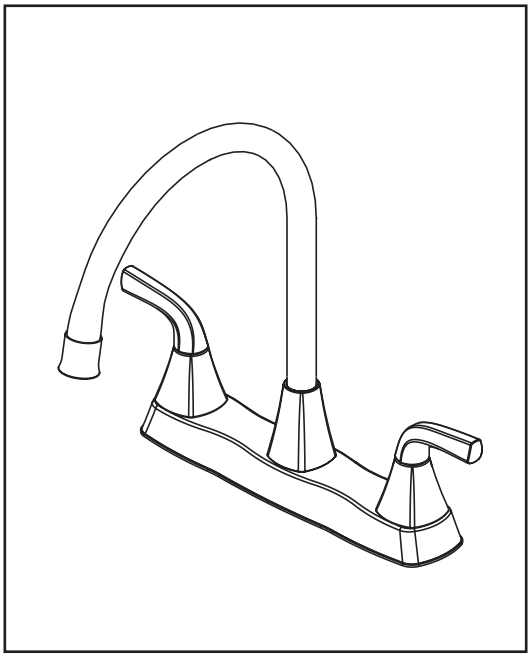

KITCHEN FAUCETS

- Parkwood® Collection
- Two Handle Deck Mount
- 3 Hole Sink Applications

STANDARD SPECIFICATIONS:

- Max. flow rate 1.5 gpm @ 60 psi, 5.7 L/min @ 414 kPa
- Two handle kitchen faucet for exposed mounting on 3 hole sinks with 8" centers
- Ceramic cartridge
- Spout rotates 360°
- Two-function aerator: aerated and spray
- 1/2" -14 NPSM threaded male inlet shanks

WARRANTY

- Parts and Finish – Lifetime limited warranty; or for commercial purchasers, 10 years for multi-family residential (apartments and condominiums) and 5 years for all other commercial uses, in each case from the date that the product is received by the original purchaser or their authorized representative (installation contractor, etc.).
- Please go to www.peerlessfaucet.com for the complete details of our limited warranty.

COMPLIES WITH:

- ASME A112.18.1 / CSA B125.1
- ICC/ANSI A117.1

▲ Designate proper finish suffix

PSP-K-P2935LF Rev. C