ASSEMBLY INSTRUCTIONS

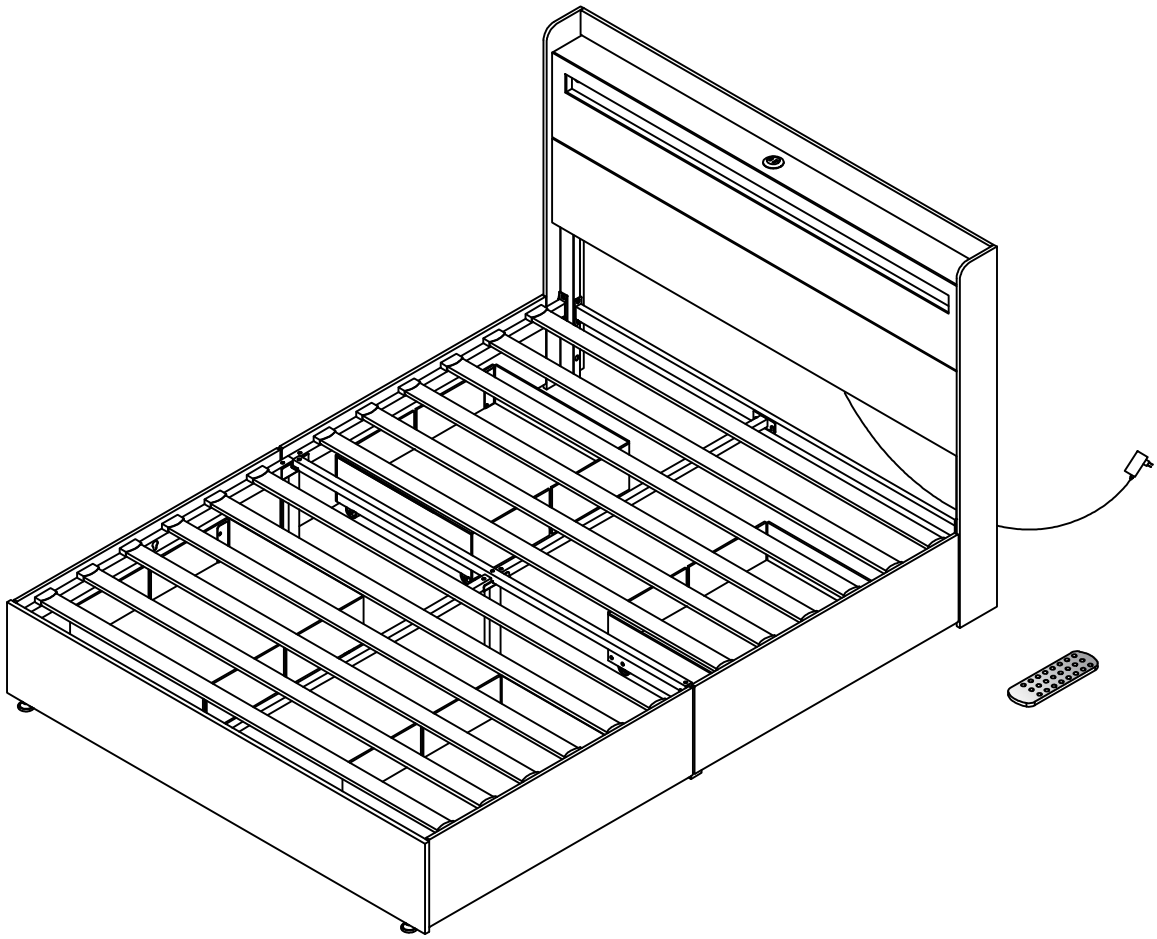

IMPORTANT

Please follow the instruction manuals and use a pad to protect the product during your assembly.

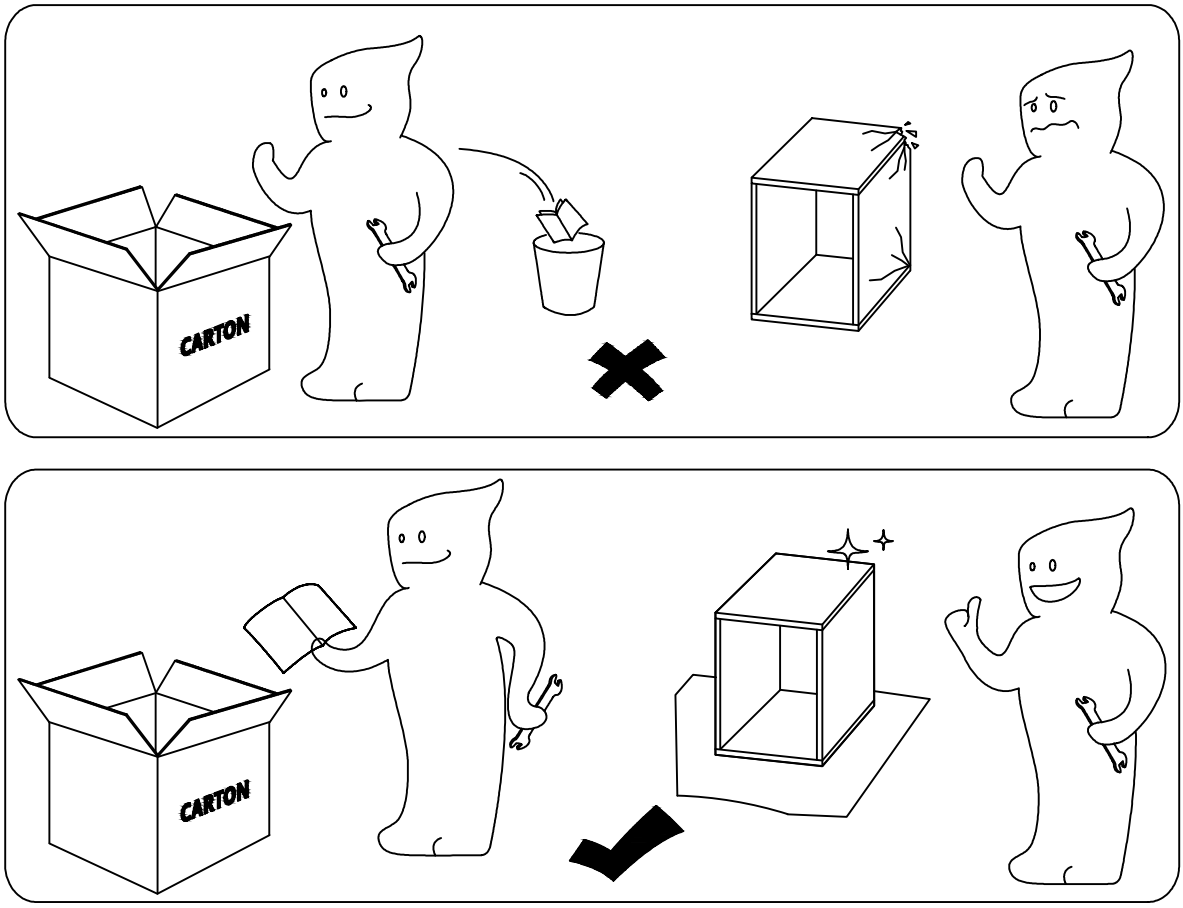

Note:
1.Should be assembled on flat ground to keep balance.
2.Before completing the installation,do not tighten the screws.



For easier and better assembly, 2 or more adults are required.

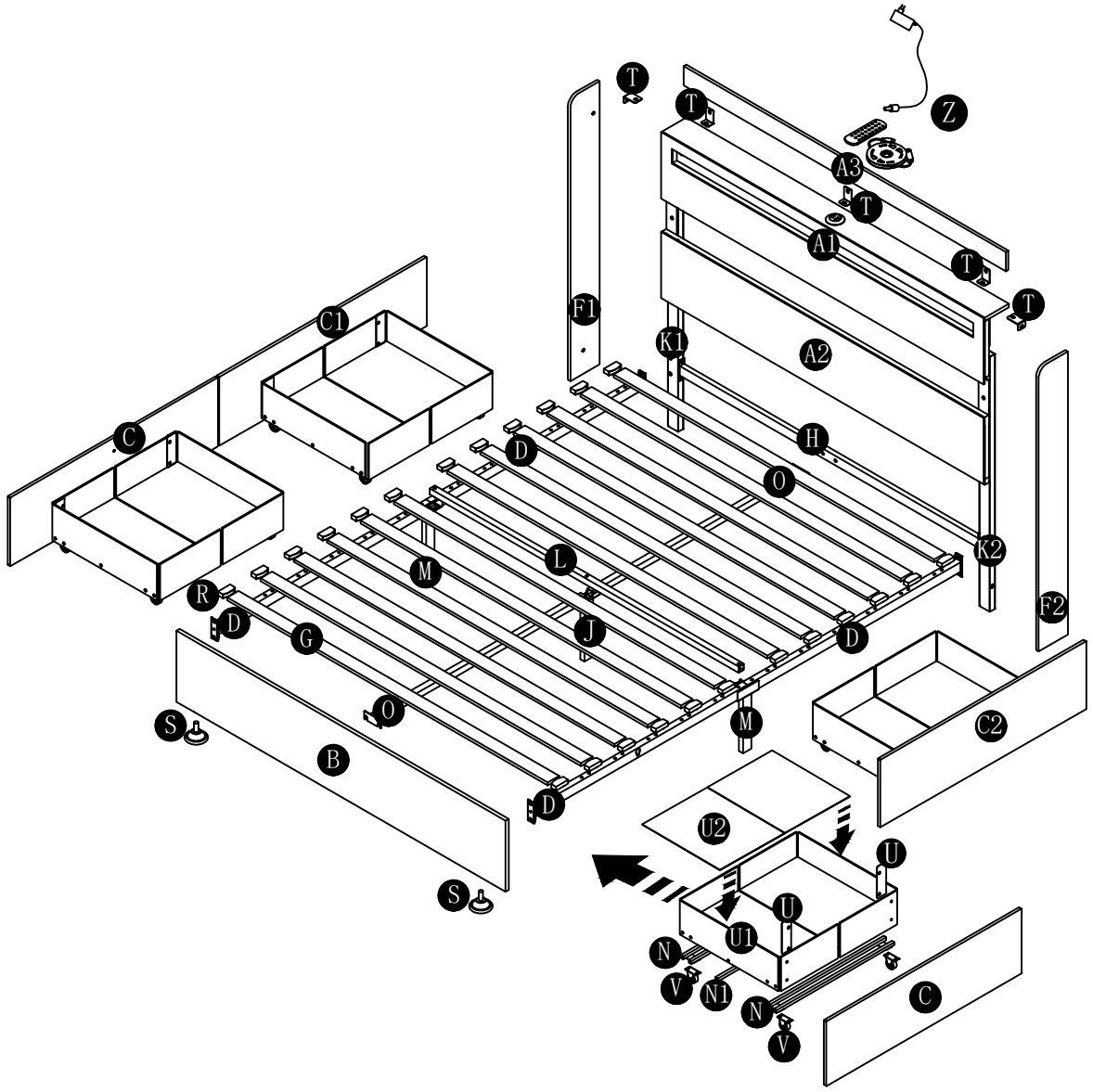
T
T
Z
A3
T
A1
T
T
F1
C1
K1
A2
C
H
D
O
K2
L
M
R
F2
D
G
J
D
O
S
M
C2
B
D
U2
U
S
U
U1
N
V
N1
N
C
V

Part list

A1 1PC 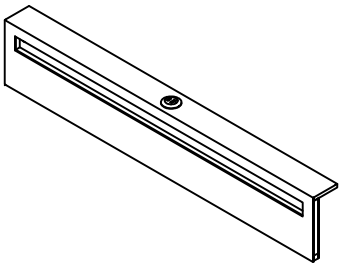	A2 1PC 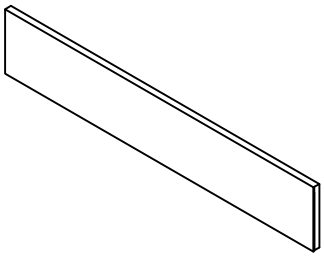	A3 1PC 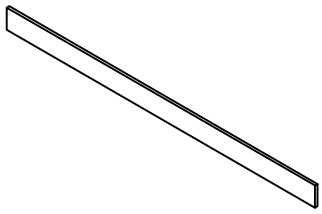
B 1PC 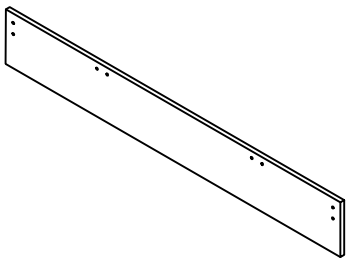	C1 1PC 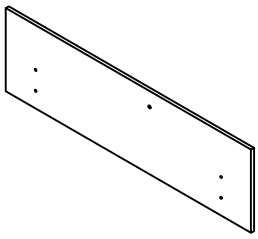	C2 1PC 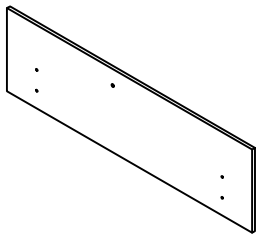
C 2PCS 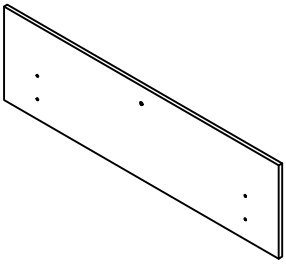	D 4PCS 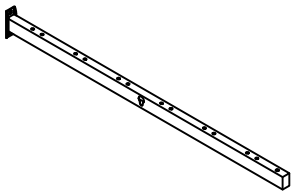	F1 1PC 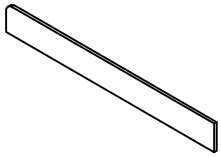
F2 1PC 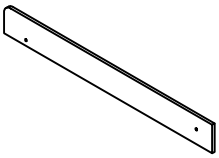	G 12PCS 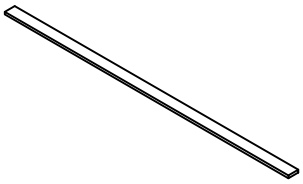	H 1PC 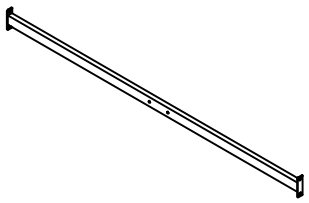
J 1PC 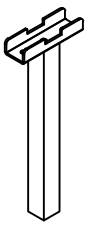	K1 1PC 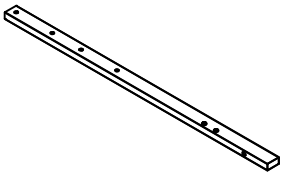	K2 1PC 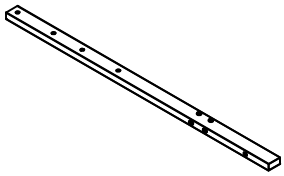

Part list

L 1PC 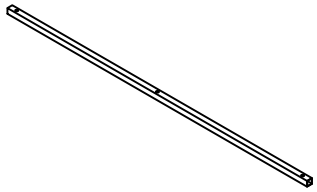	M 2PCS 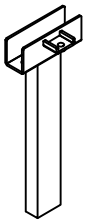	N 8PCS 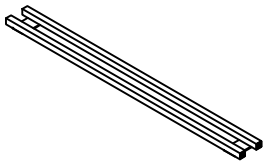
N1 4PCS 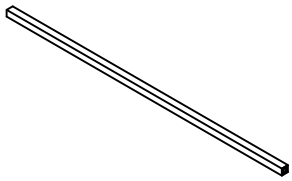	O 2PCS 	S 2PCS 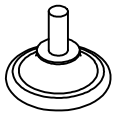
T 5PCS 	U 8PCS 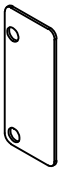	U1 4PCS 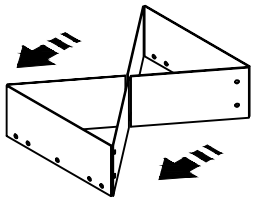
U2 4PCS 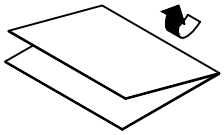	V1 16PCS 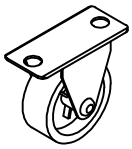	Z 1PC 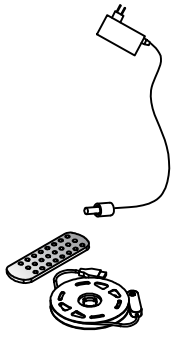
R 24PCS 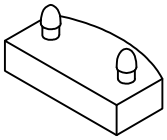		

Hardware list

X1 2PCS 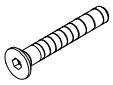 M8*65mm	X2 13PCS 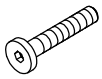 M8*50mm	X3 4PCS  M8*40mm	X4 26PCS  M8*16mm
X5 4PCS  M8*12mm	X6 88PCS  M6*14mm	X7 14PCS  ∅22*∅8.5	Z1 1PC 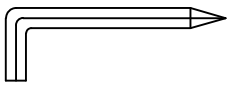 M8 Spanner
Z2 1PC 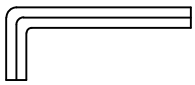 M6 Spanner			

step1

X2	8PCS
	M8*50mm
X7	8PCS

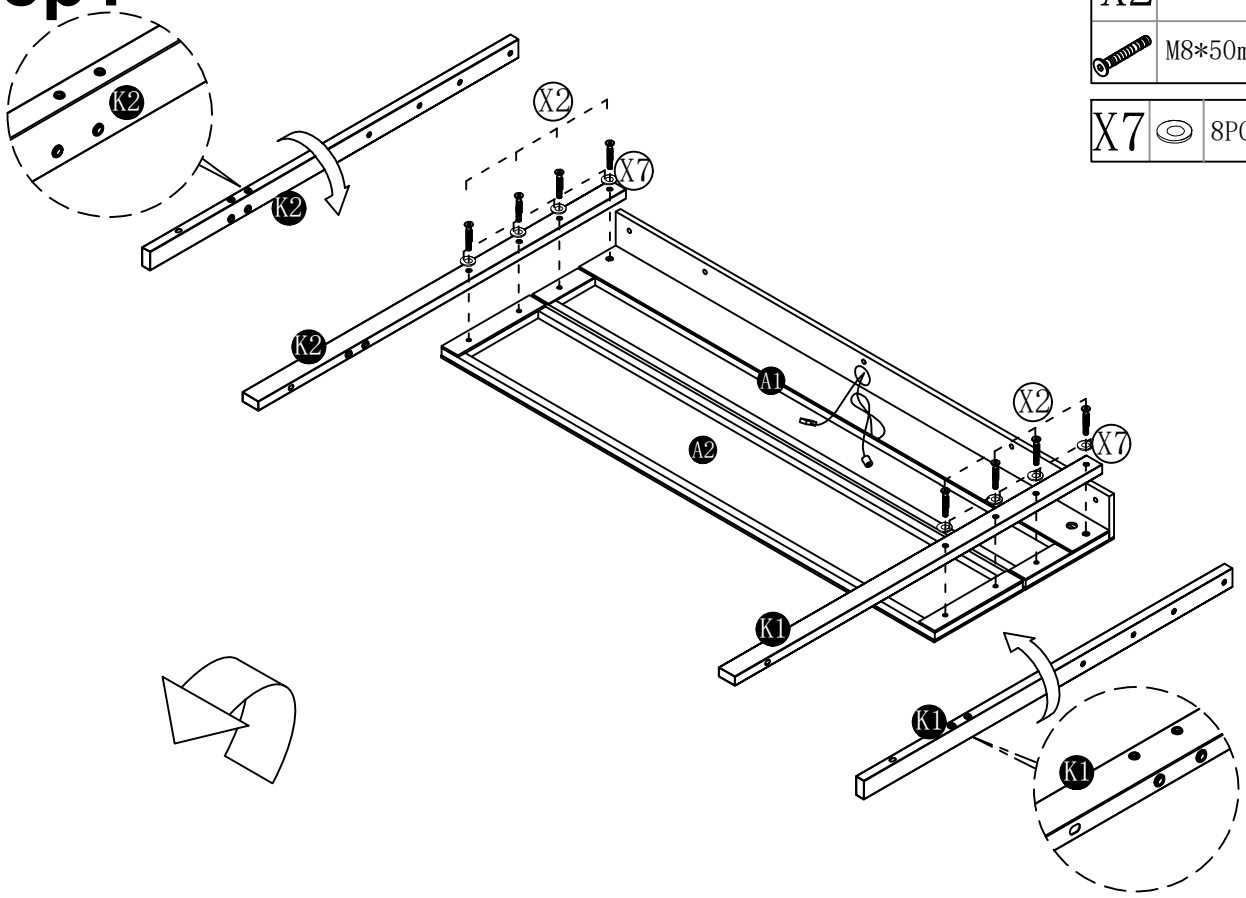

step2

X4	6PCS
	M8*16mm

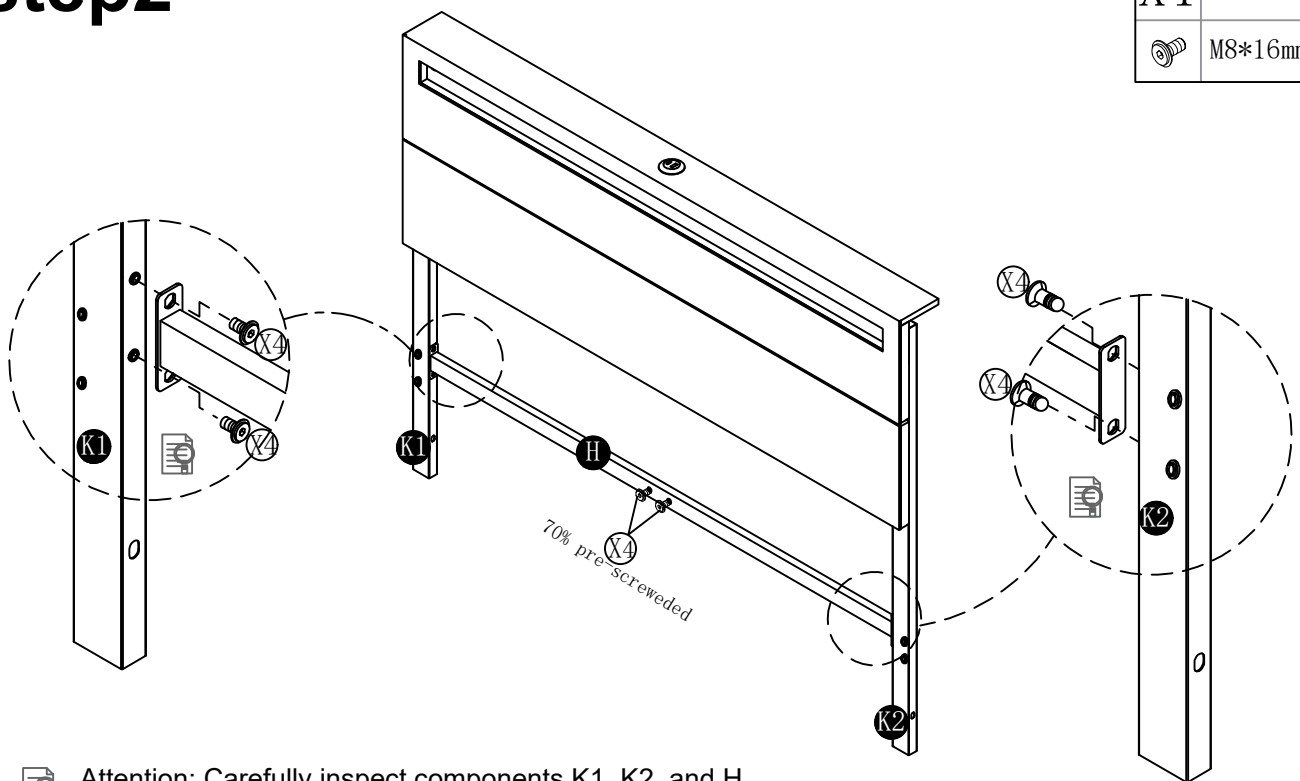

Attention: Carefully inspect components K1, K2, and H to ensure thay they are on the right position.

step3

X2	4PCS
	M8*50mm

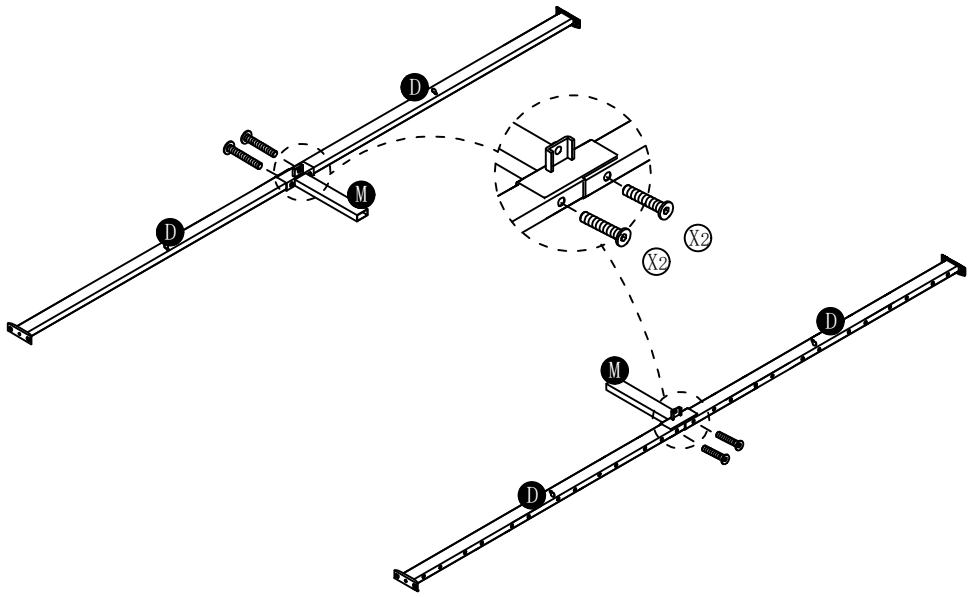

step4

X4	4PCS
	M8*16mm

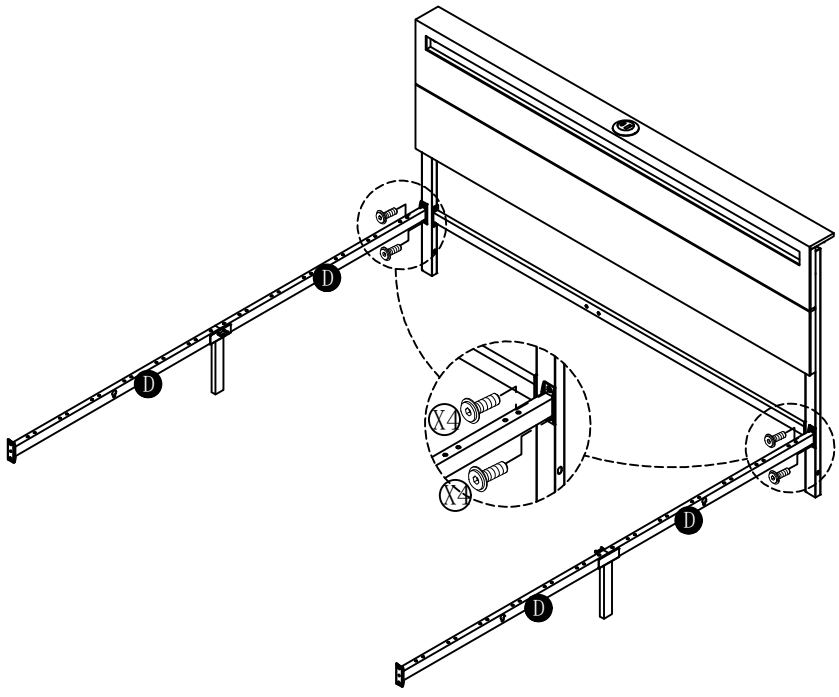

step5

X4	2PCS
	M8*16mm

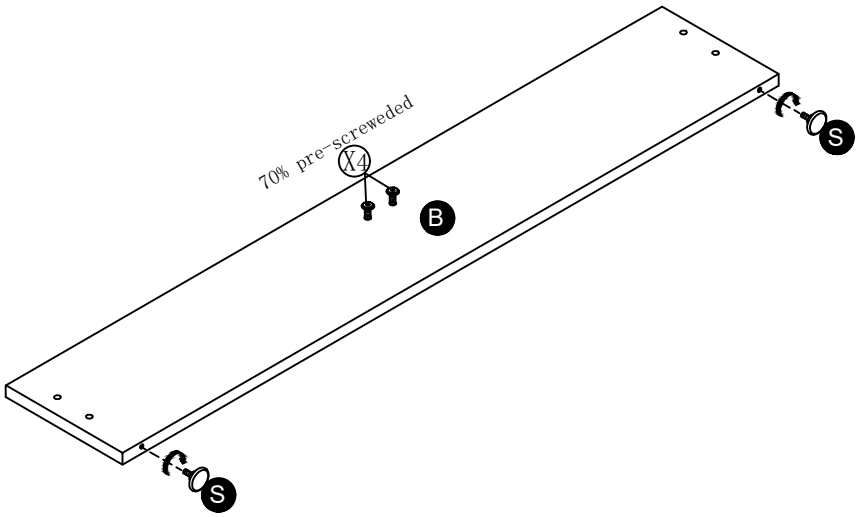

step6

X4	4PCS
	M8*16mm

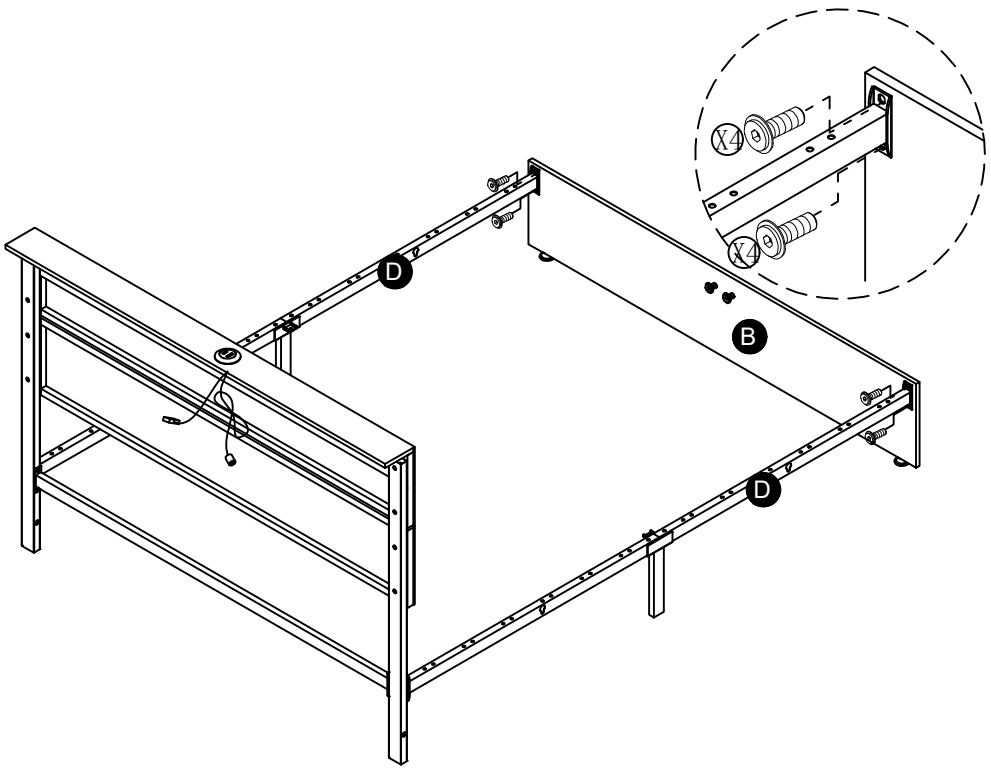

step7

X3	2PCS
	M8*40mm

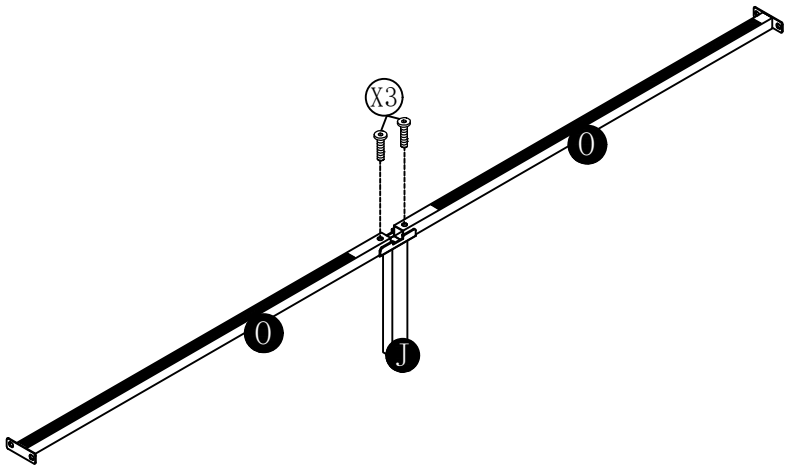

step8

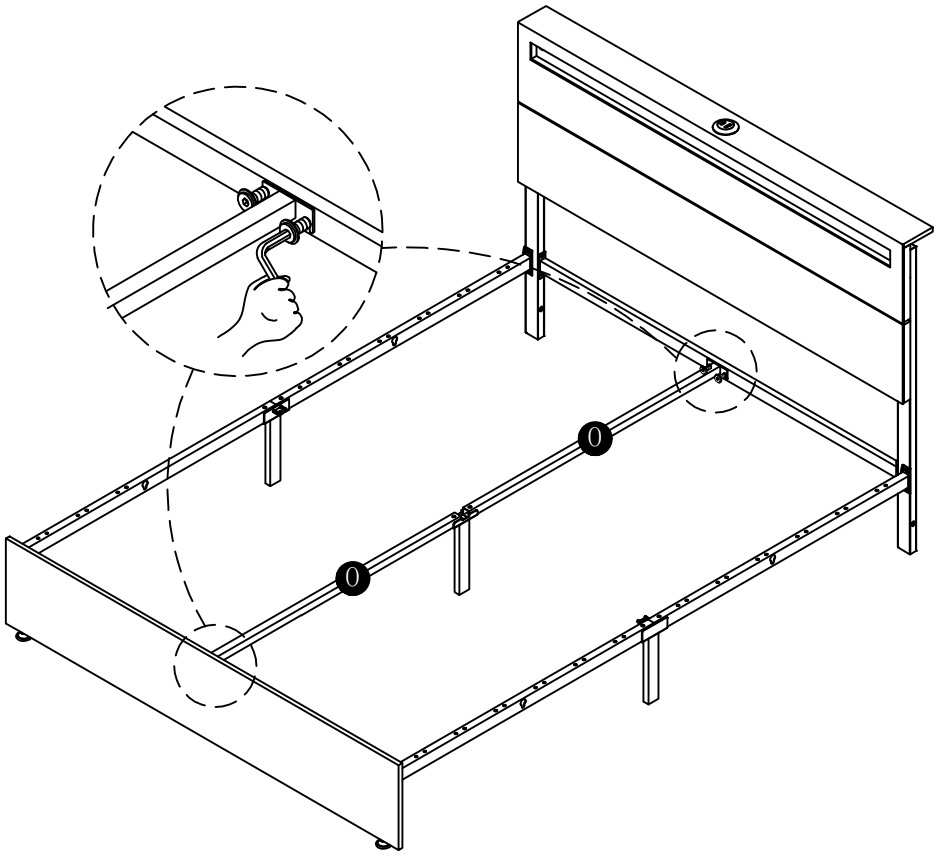

step9

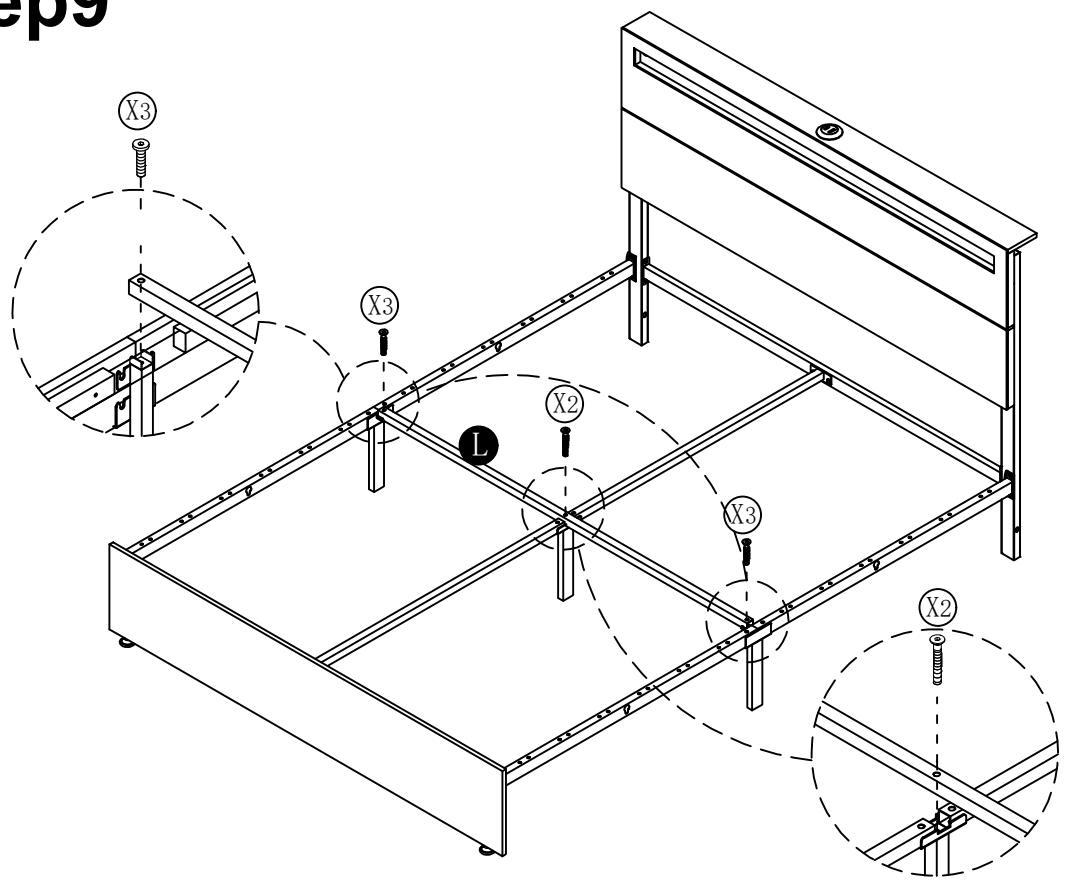

X2	1PCS
	M8*50mm

X3	2PCS
	M8*40mm

step10

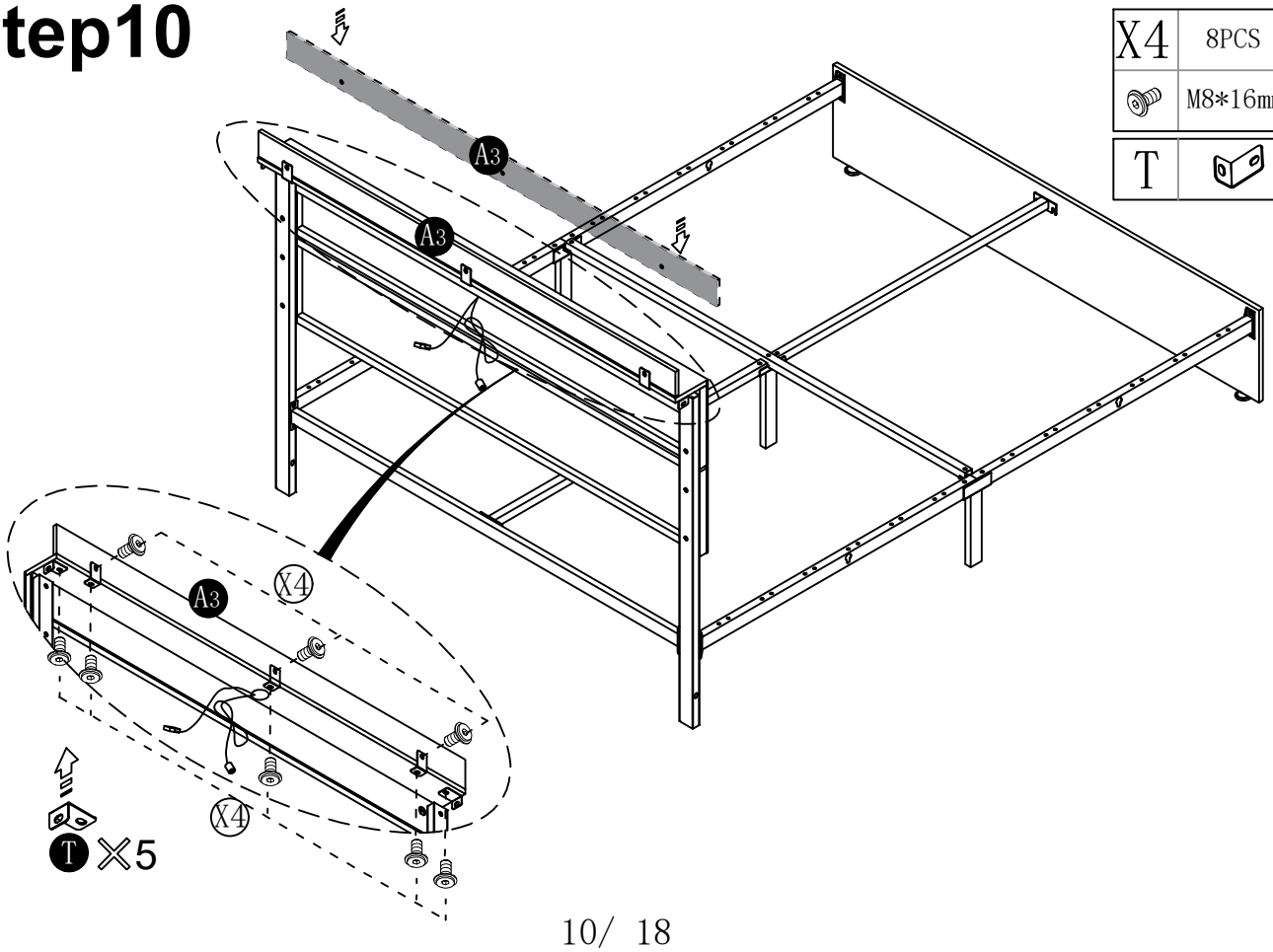

X4	8PCS
	M8*16mm
T	

step11

X4	2PCS
	M8*16mm

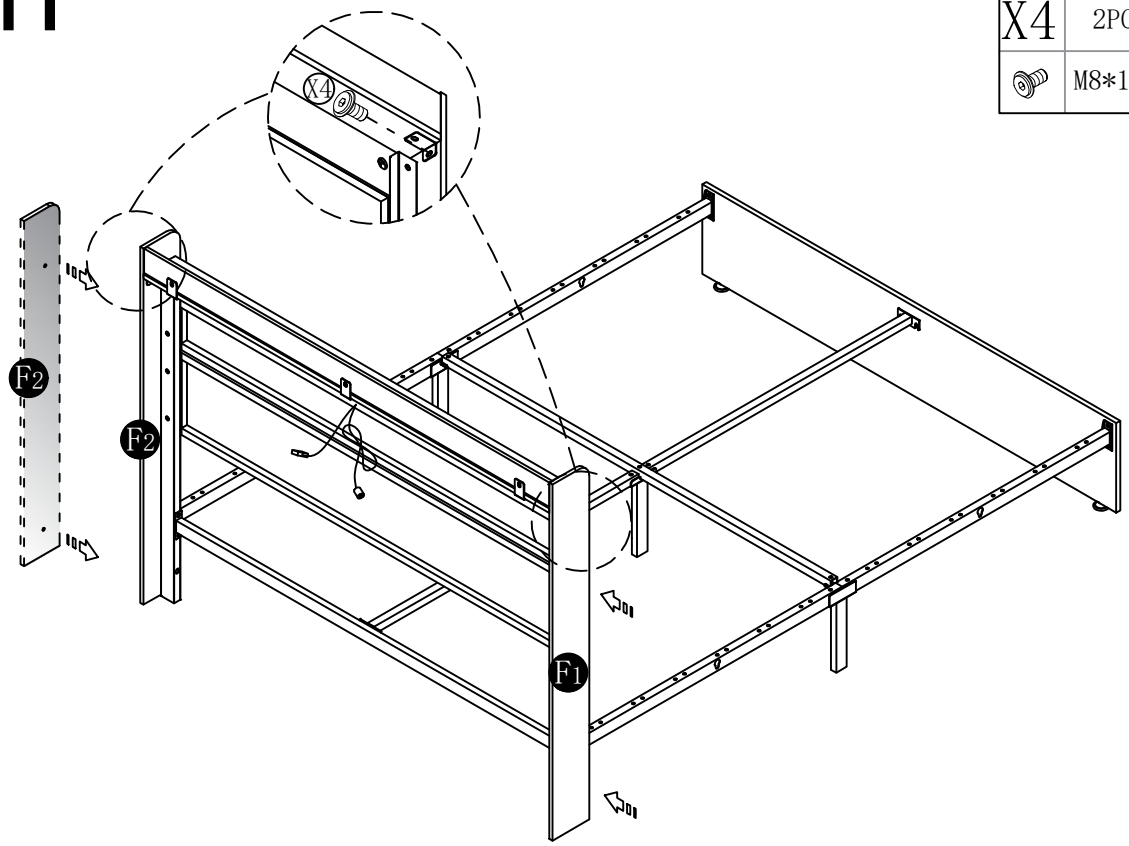

step12

X1	2PCS
	M8*65mm
X7	2PCS

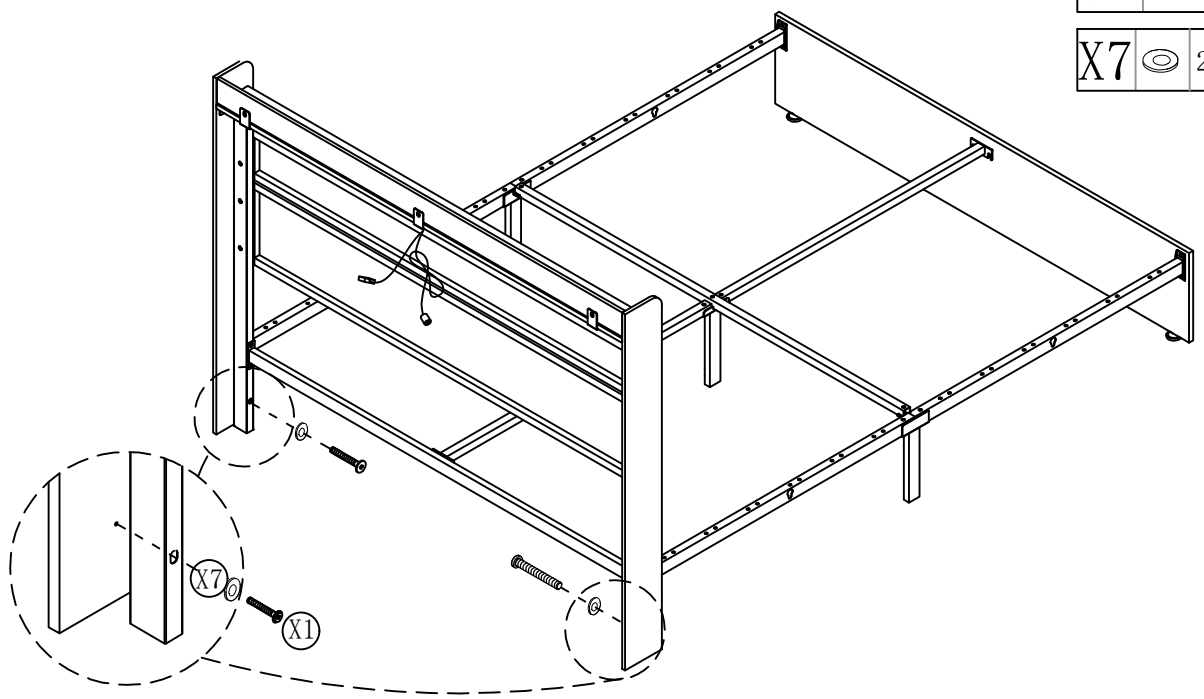

step13

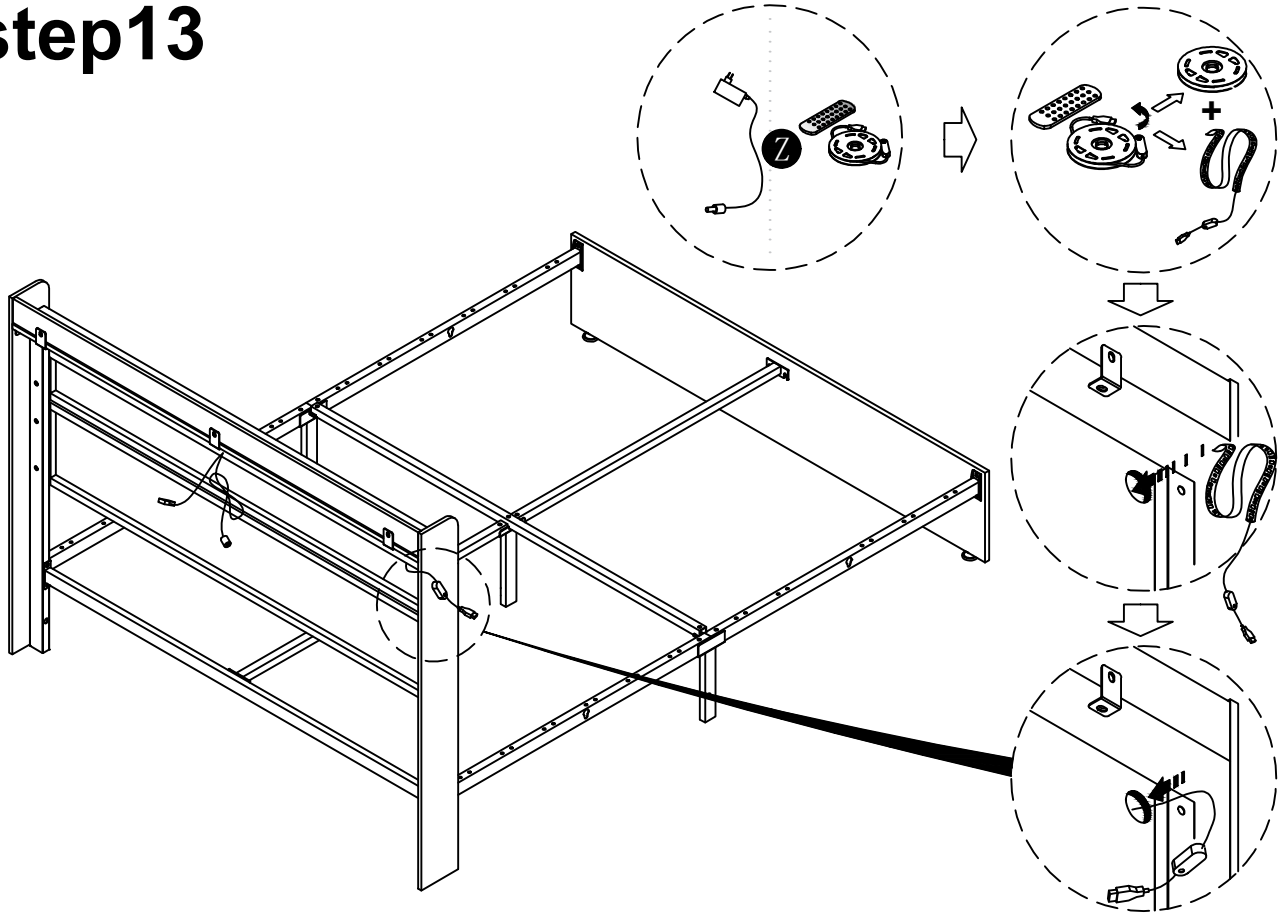

From the tail end of the light strip,
pass through the wiring harness hole

step14

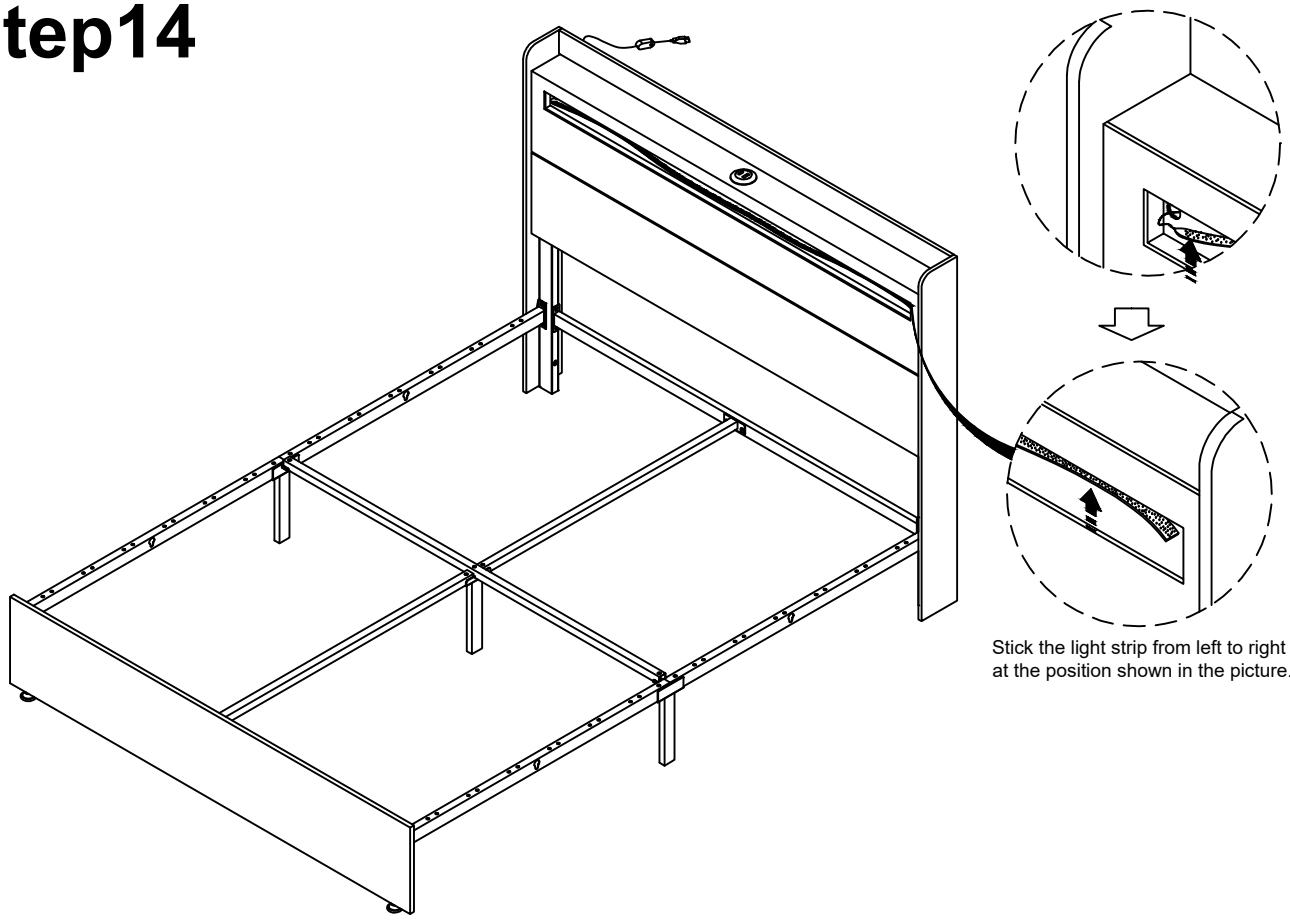

Stick the light strip from left to right
at the position shown in the picture.

step15

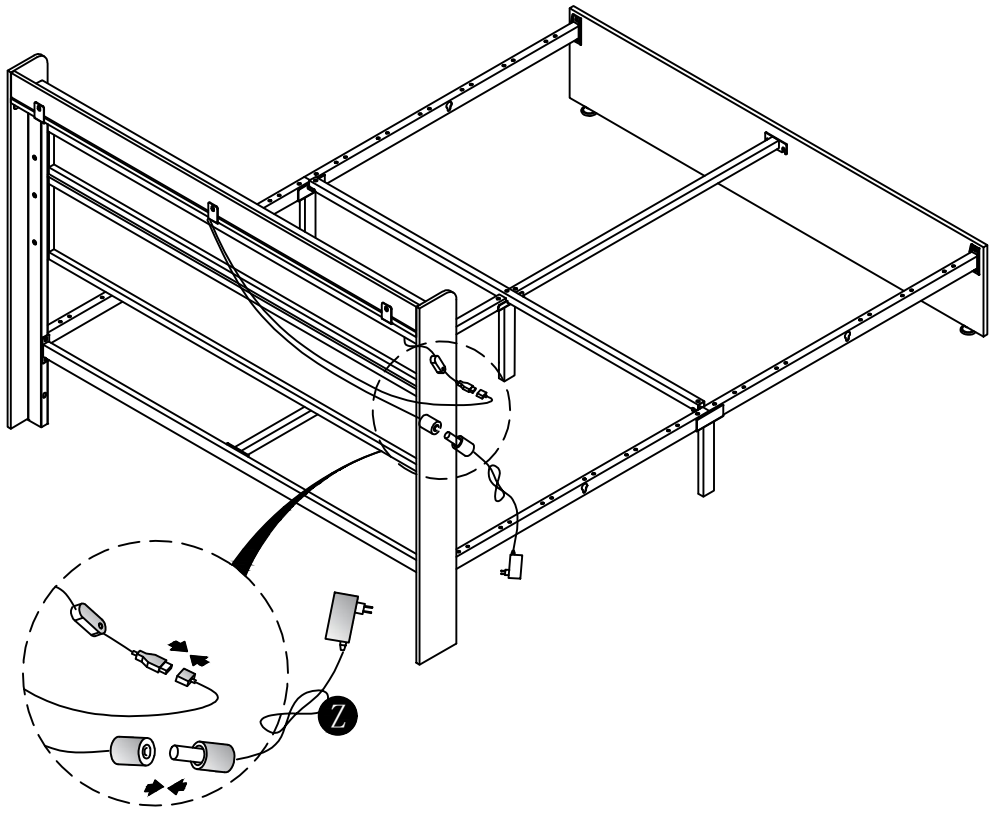

step16

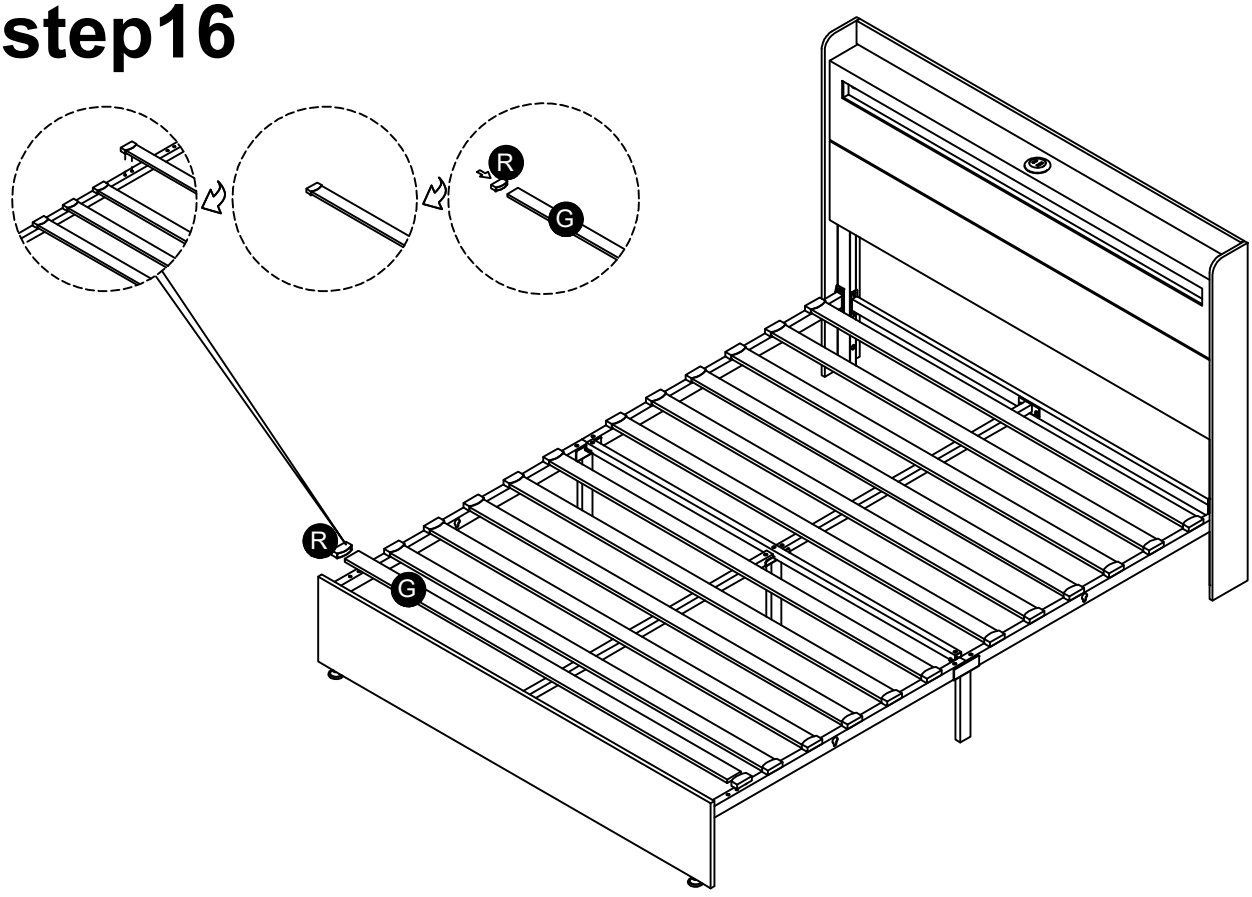

step17

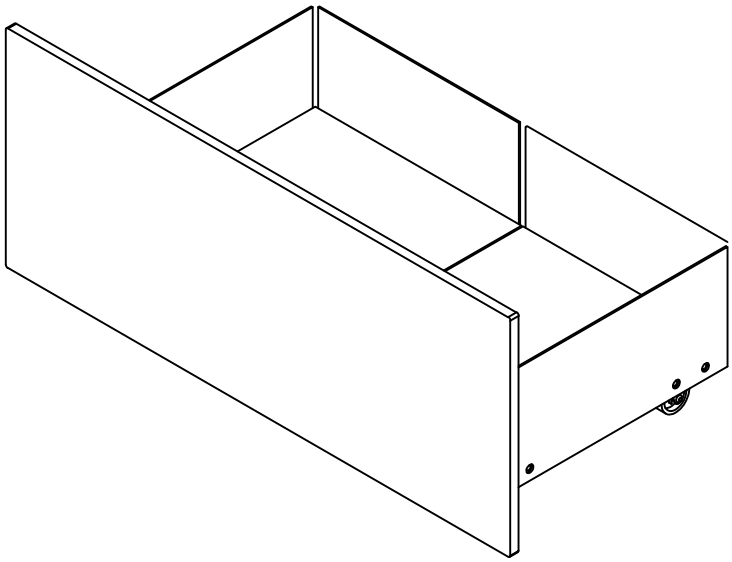

·Drawer Installation Steps

step18

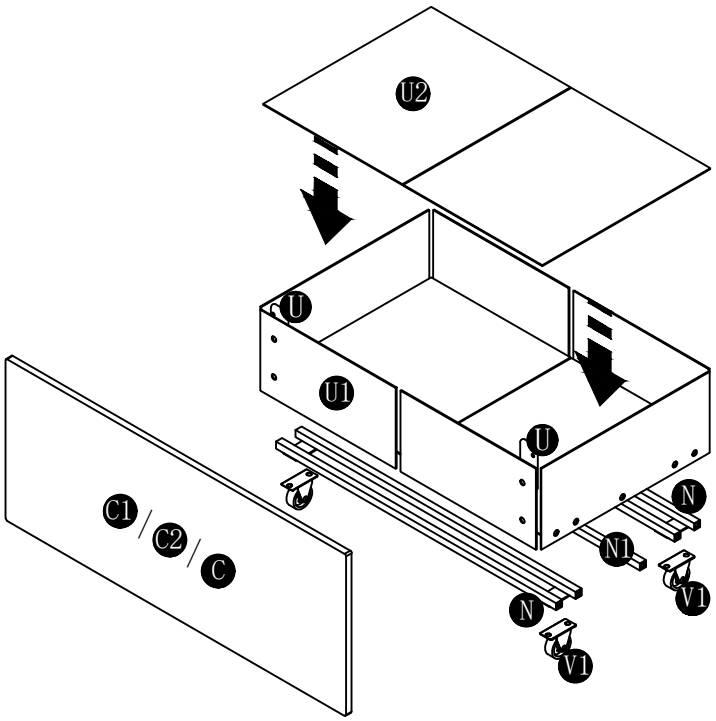

×4

step19

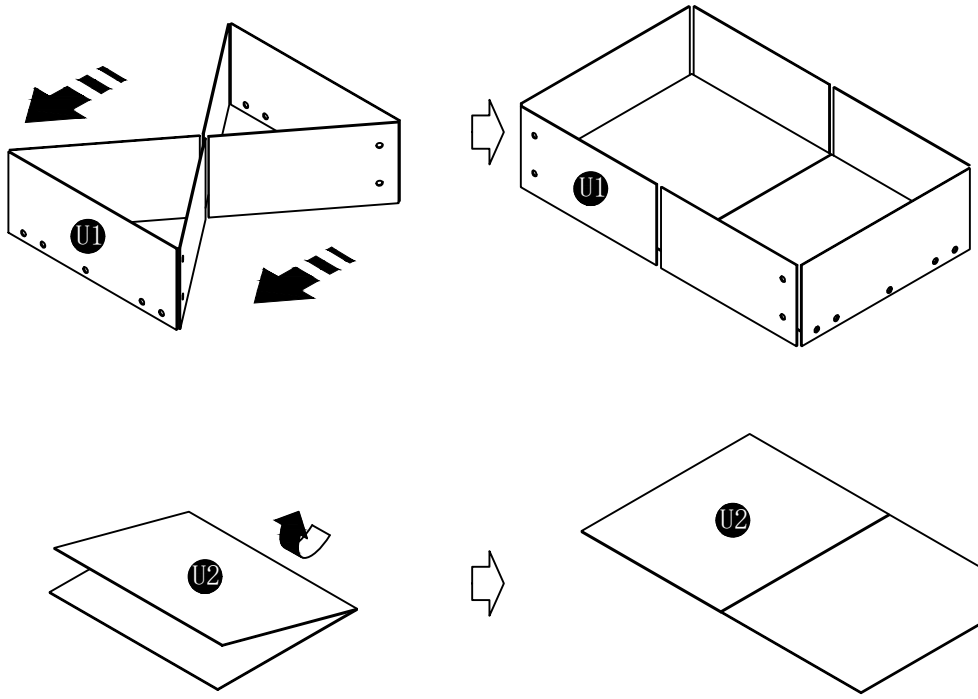

×4

step20

X6	72PCS
	M6*14mm
V1	16PCS

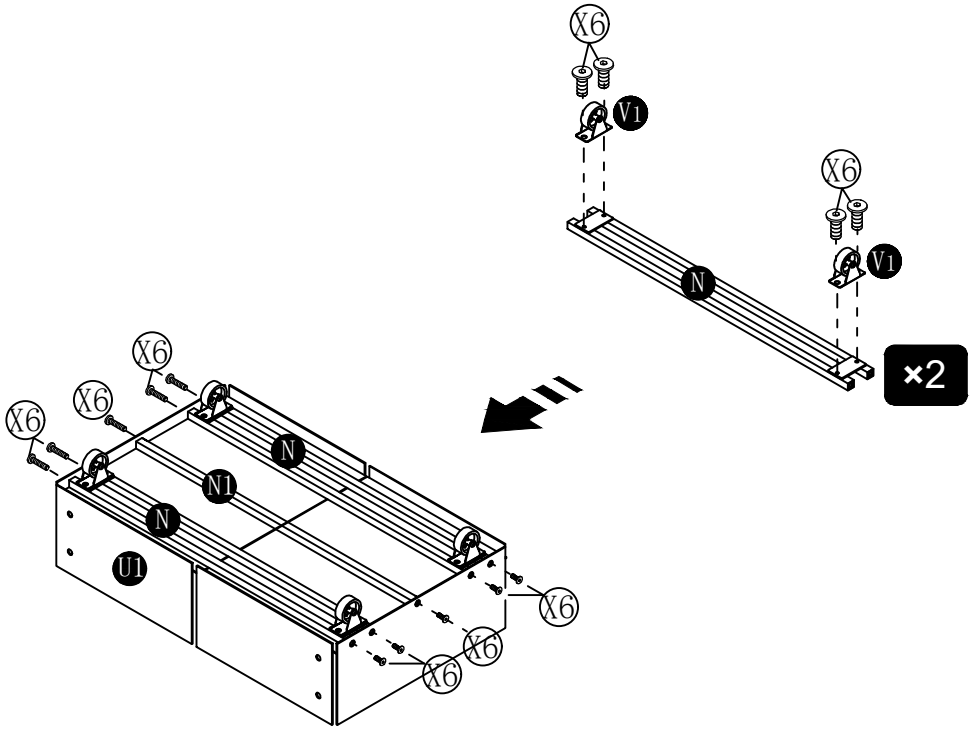

×4

step21

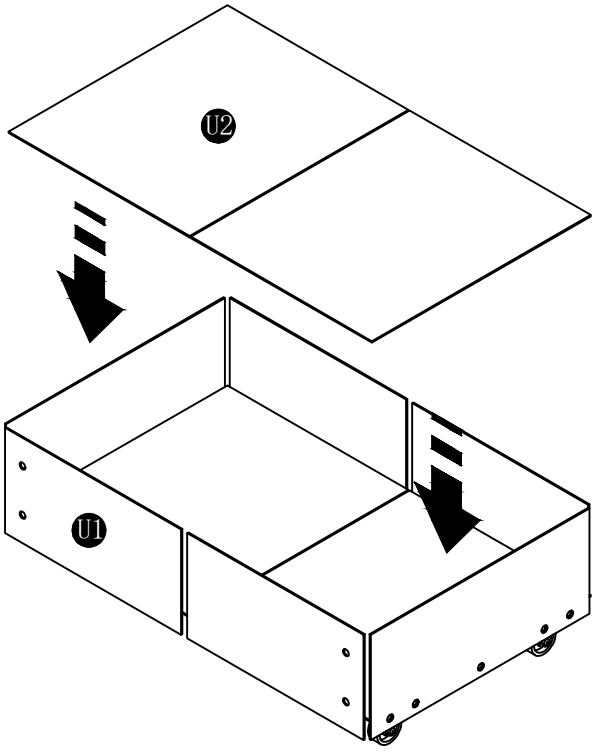

×4

step22

X6	16PCS
	M6*14mm

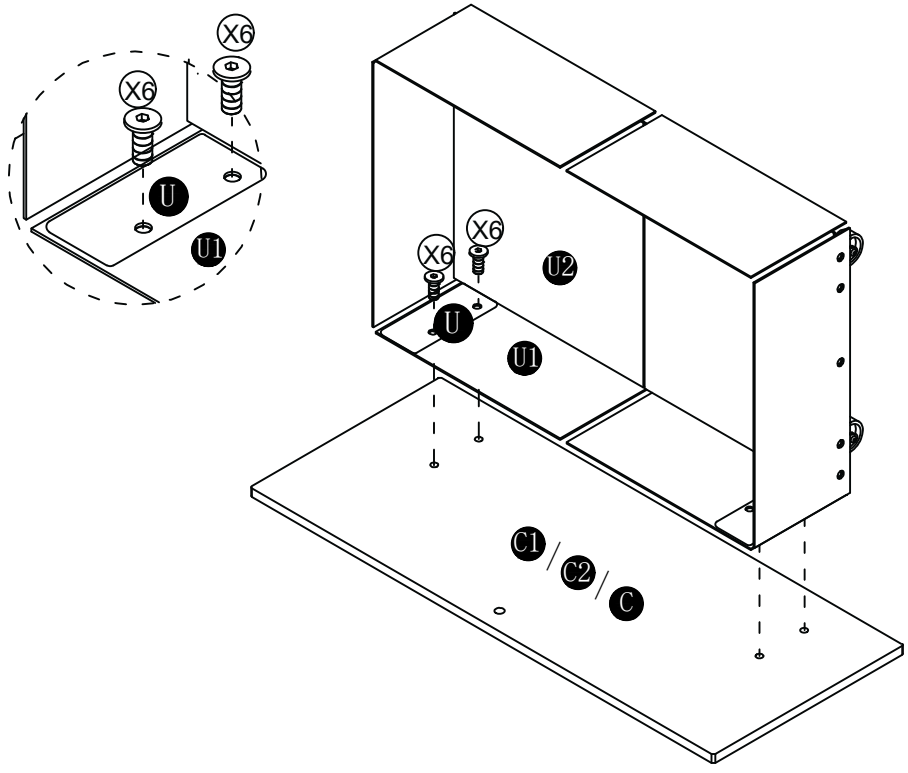

×4

step23

X5	4PCS
	M8*12mm
X7	4PCS

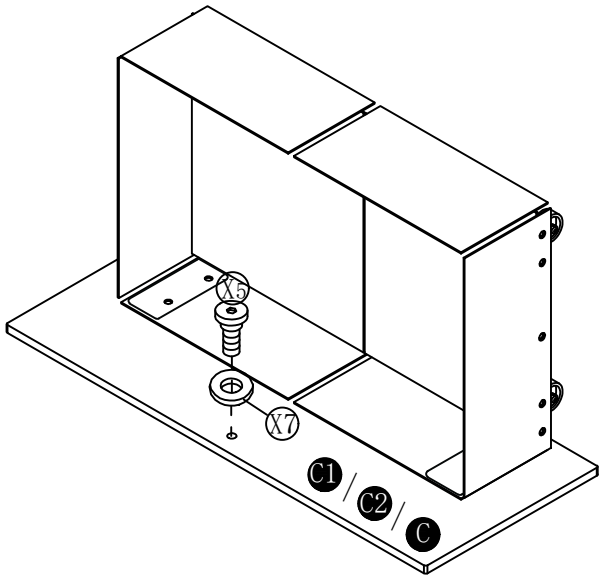

×4

step24

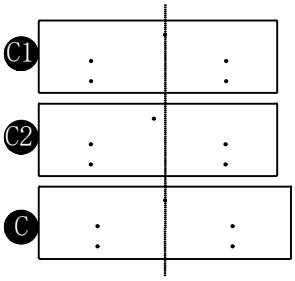

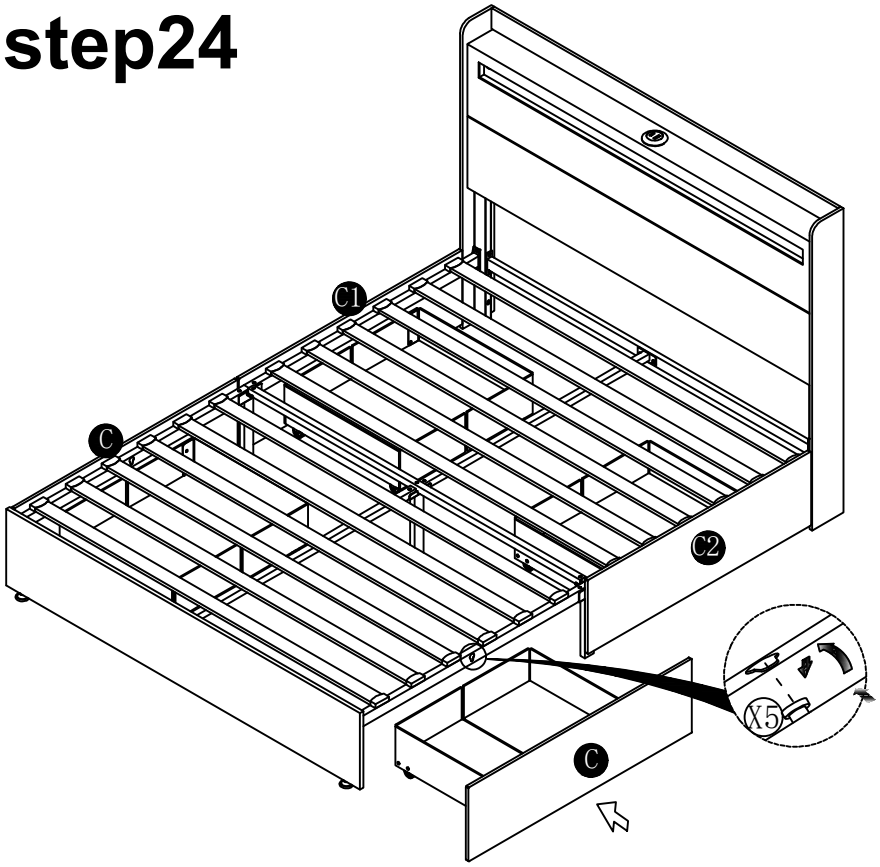

Lift the panel to allow the X5 to match the hole to secure the drawers.
Same way for pulling out.

step25

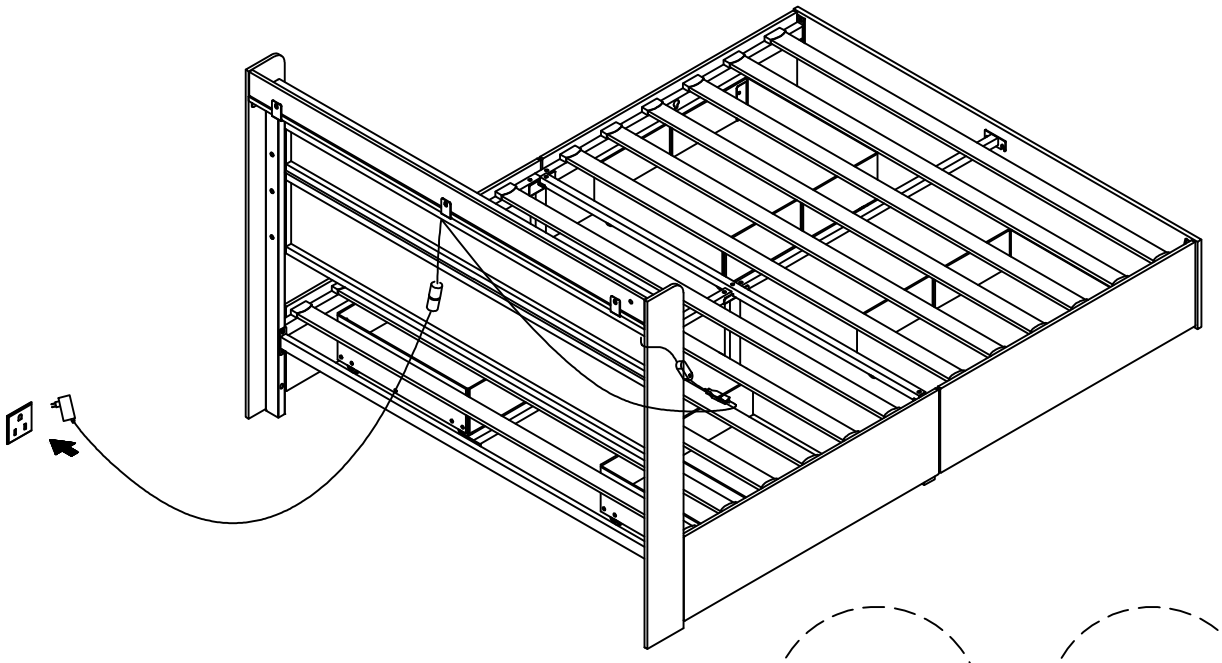

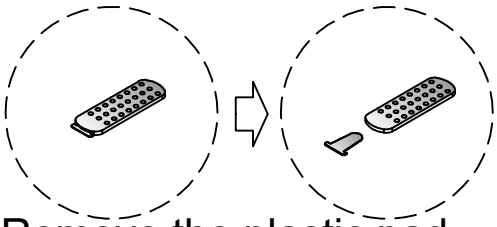

Remove the plastic pad