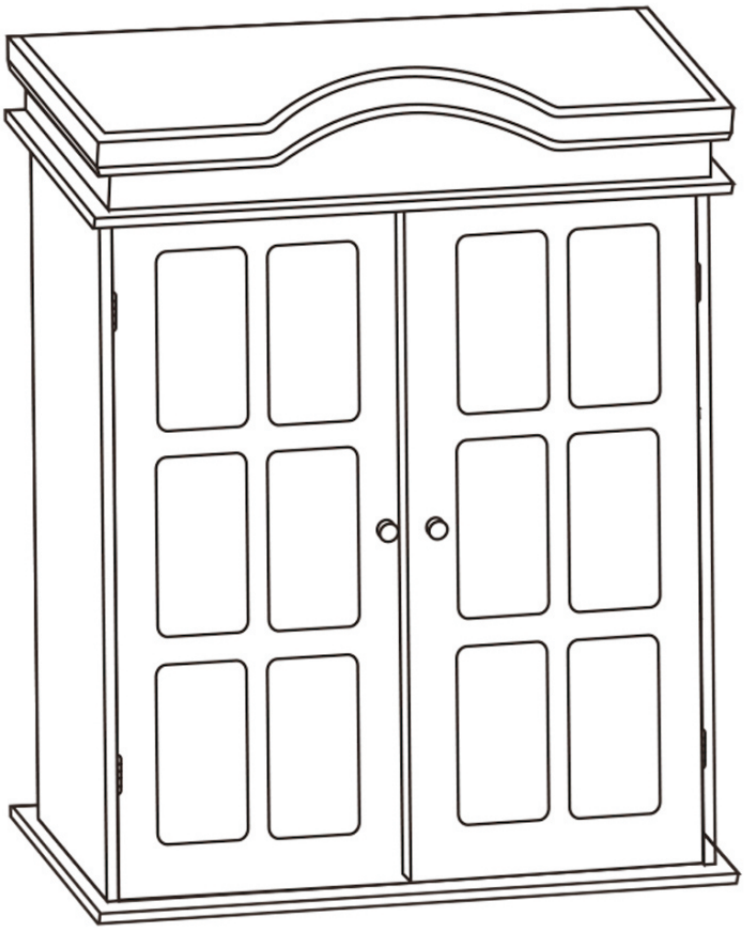

USER'S MANUAL

Bathroom cabinet

THIS INSTRUCTION BOOKLET CONTAINS **IMPORTANT** SAFETY INFORMATION. PLEASE READ AND KEEP FOR FUTURE REFERENCE.

FLOOR AREA
2MX2M

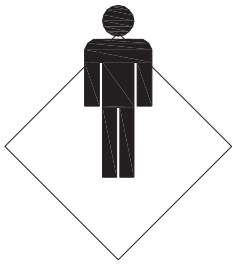

ASSEMBLED BY 1 ADULT

Before You Start

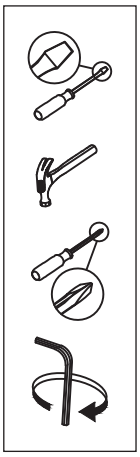

- Read each step carefully before starting. It is very important to ensure each step followed in correct order, otherwise assembly difficulties may occur.
- Most of board parts are labeled or stamped on the raw edges. Have a check to make sure all parts are included.
- Work in a spacious area, preferably on a carpet close to where the unit will be used.
- Keep the handtools close at hand. Do not use power tools to assemble your furniture. They may scratch or damage the parts.

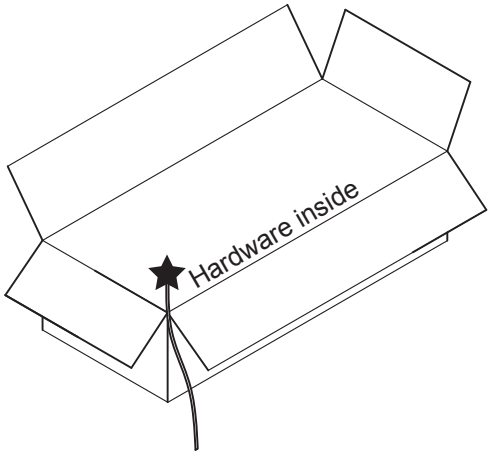

6x35mm ax4	hx1
10x15mm bx4	ix2
5.8x30mm cx16	4x18mm jx2
3x10mm dx18	kx4
41x12mm ex4	4x35mm px6
2. 5x14mm fx2	qx2
12x20mm gx2	

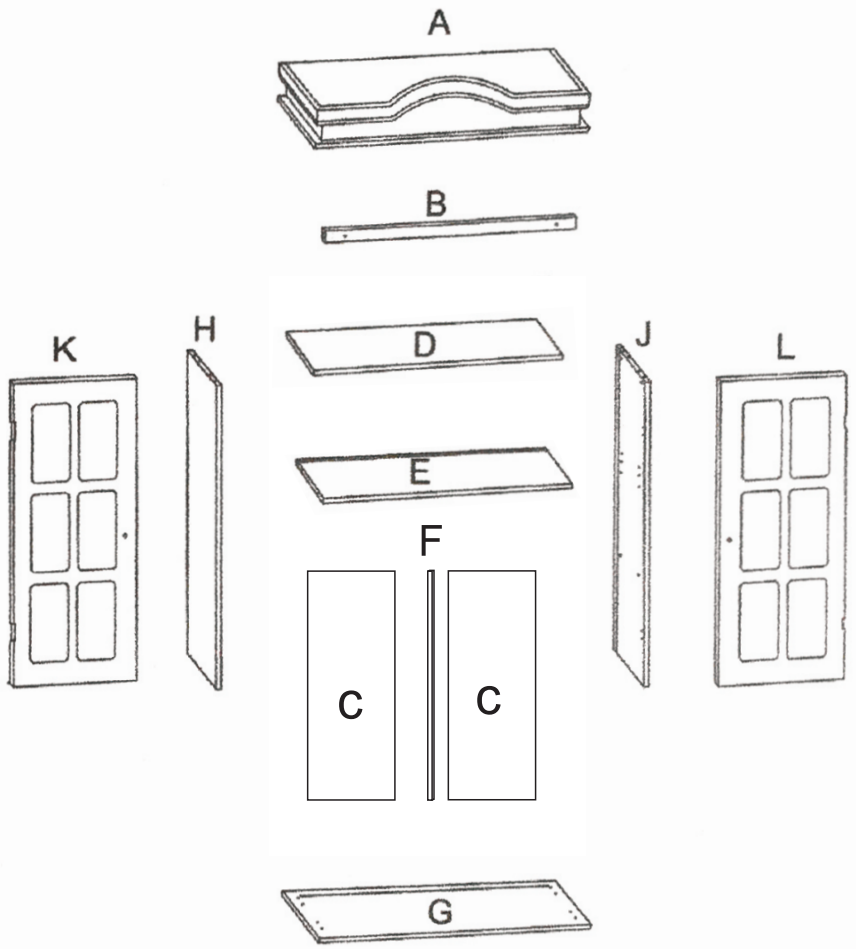

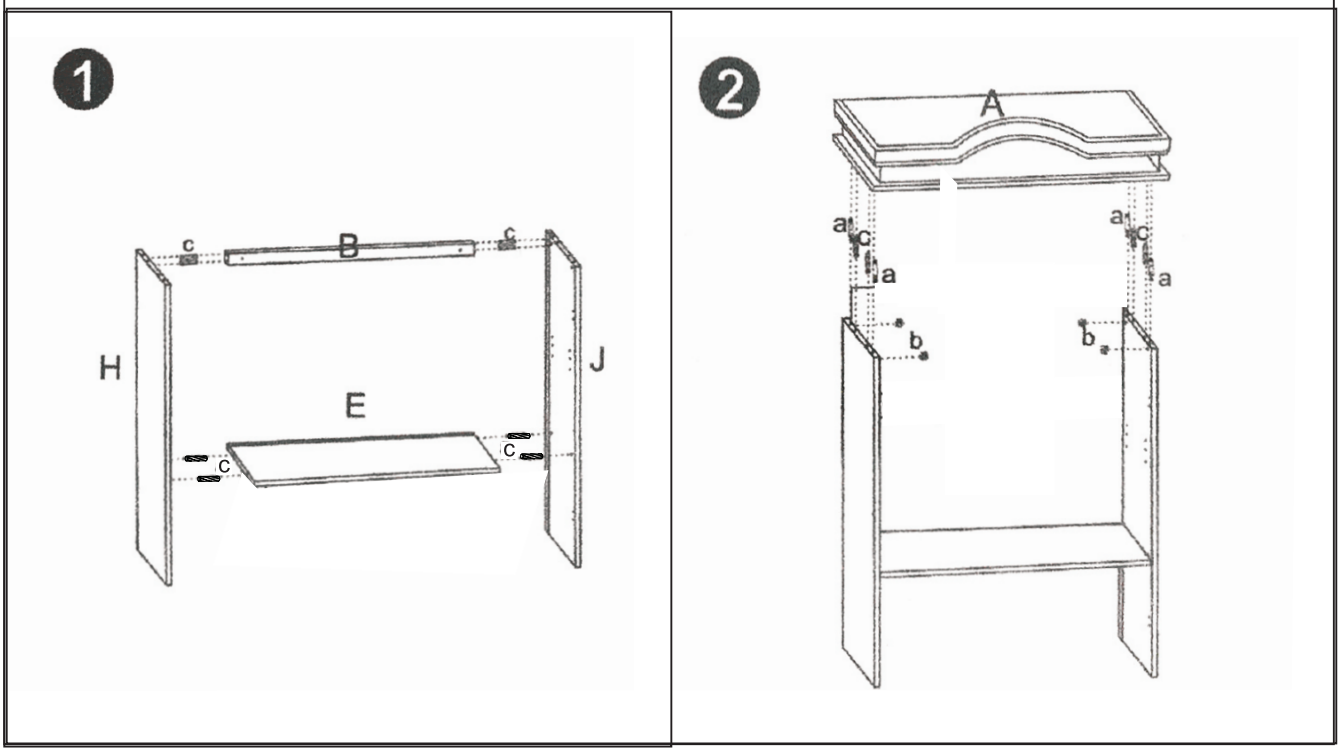

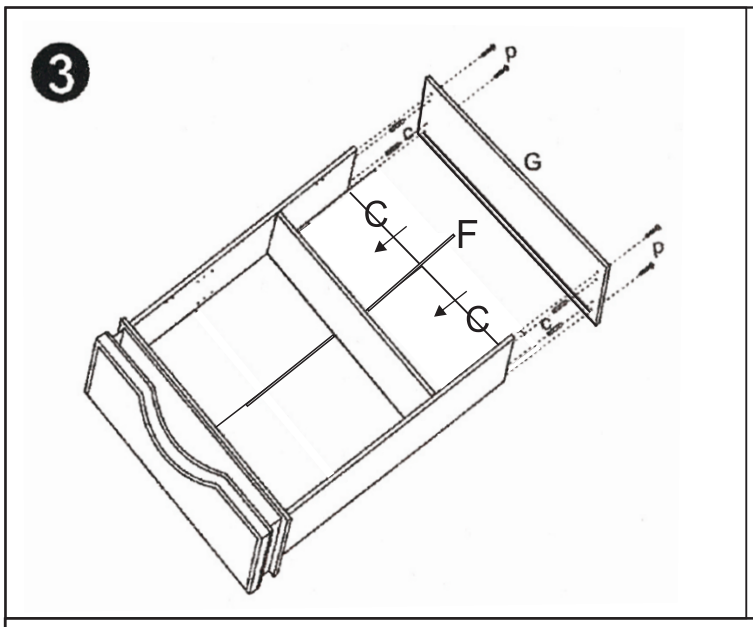
3
p
c
G
C
F
C
p
c

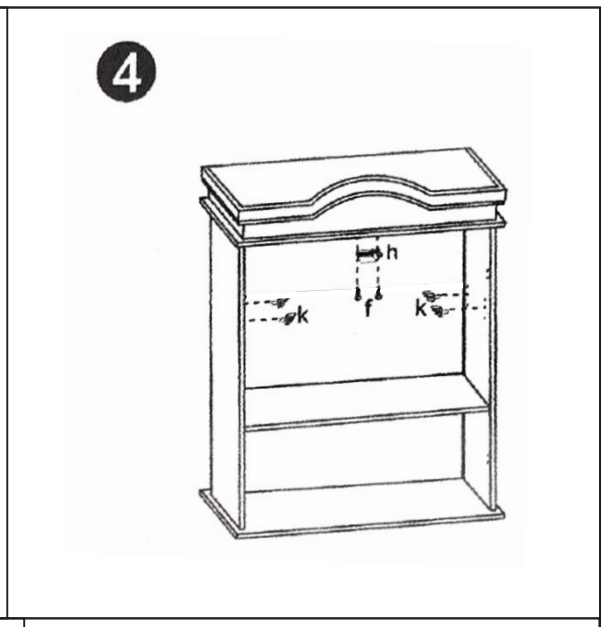
4
h
k
f
k

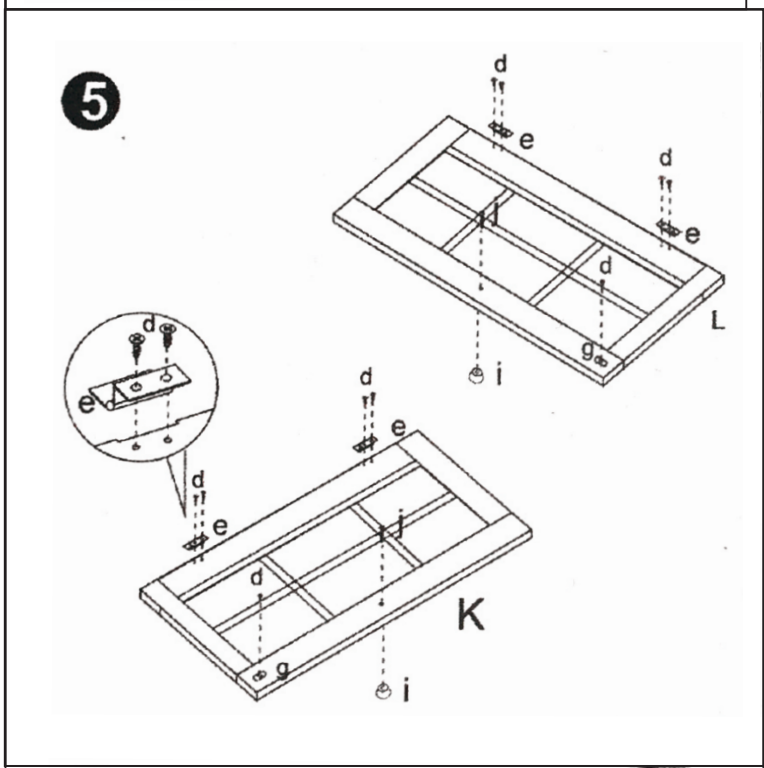
5
d
e
d
e
d
L
g
i
d
e
d
e
d
e
j
d
K
g
i

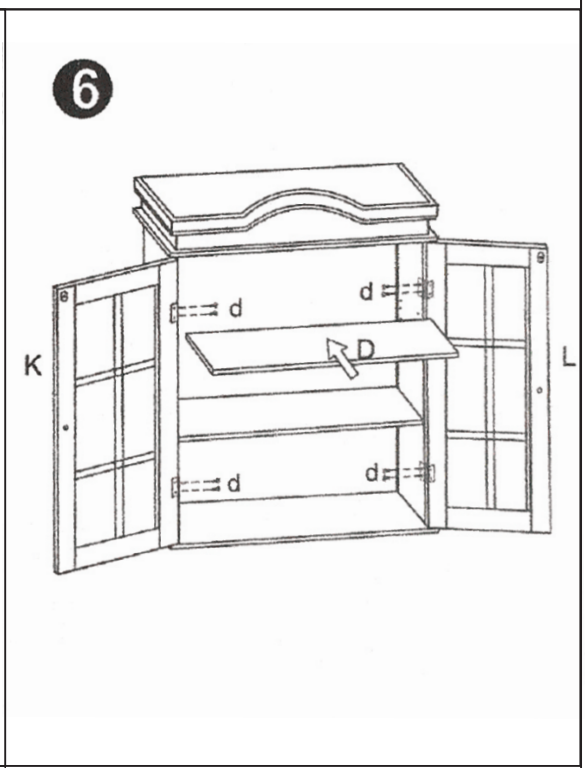
6
d
d
K
D
L
d
d

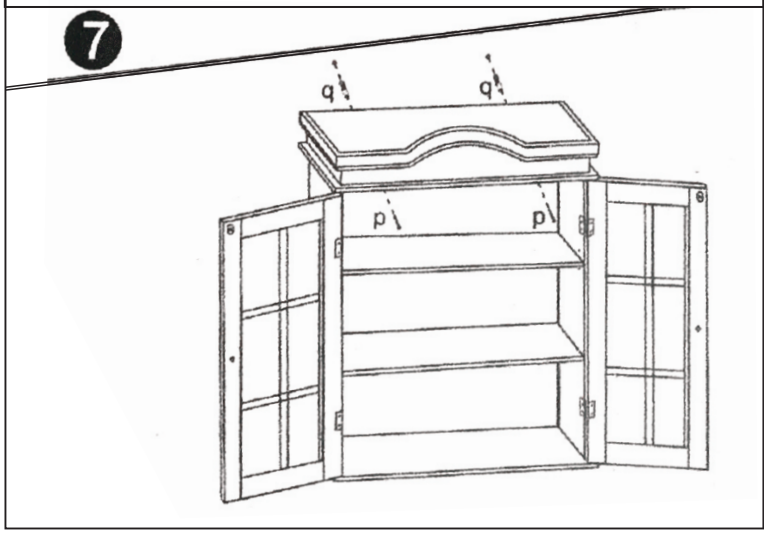
7
q
q
p
p

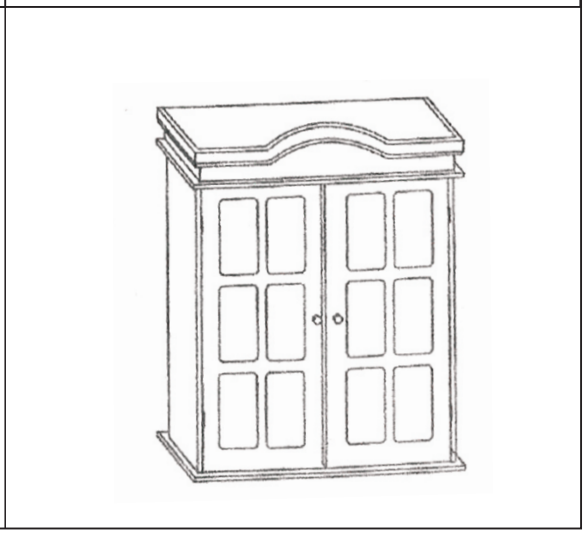

Care and Maintenance

Use a soft, clean cloth that will not scratch the surface when dusting.
Use of furniture polish is not necessary.
Should you choose to use polish, test first in an inconspicuous area.
Using solvents of any kind on your furniture may damage the finish.
Never use water to clean your furniture as it may cause damage to the finish.
Liquid spills should be removed immediately. Using a soft clean cloth, blot the spill gently. Avoid rubbing.
Check bolts/screws periodically and tighten them if necessary.

Further advice about wood furniture care

It is best to keep your furniture in a climate-controlled environment.
Extreme temperature and humidity changes can cause fading, warping, shrinking and splitting of wood.
It is advised to keep furniture away from direct sunlight as sun may damage the finish.
Proper care and cleaning at home will extend the life of your purchase.
Following these important and helpful tips will enhance your furniture as it ages.