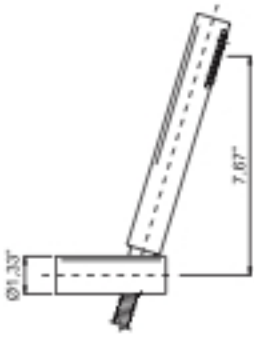
7,67"
Ø1,33"

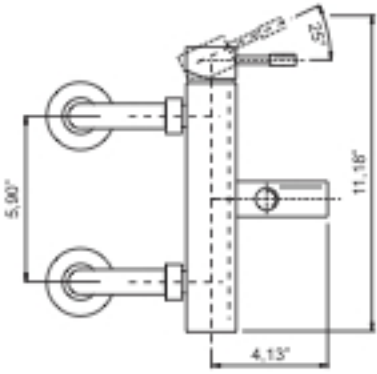
25°
11,18"
5,90"
4,13"

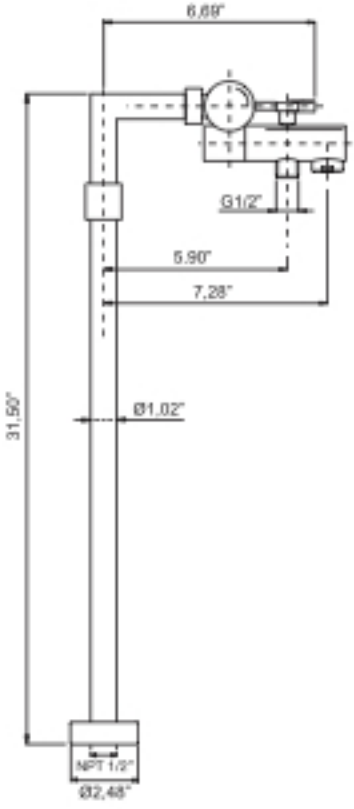
6,69"
G1/2"
5,90"
7,28"
31,50"
Ø1,02"
NPT 1/2"
Ø2,48"