TV Stand Installation

INSTALLATION MANUAL Tools You Will Need:

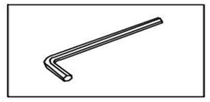

Hexagon wrench

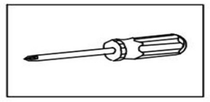

Philips Screwdriver

Before the Installation

1. Do not throw away packing materials until assembly is complete for small parts may come loose inside the carton during shipment. If parts are missing, please contact us.
2. Assemble this item on a soft surface, such as carpet to protect the finish.
3. Proper assembly of this item requires 2 people.
4. Periodically check to ensure that all connections are tight.
5. It is recommended that installation of the product be done by a qualified licensed furniture assembler.

Care and Cleaning

1. To protect the finish, avoid use chemicals and household cleaners.
2. All hot serving dishes should be placed on a pad.
3. Any liquid spilled onto the top should be cleaned up immediately with a damp cloth.

Parts List

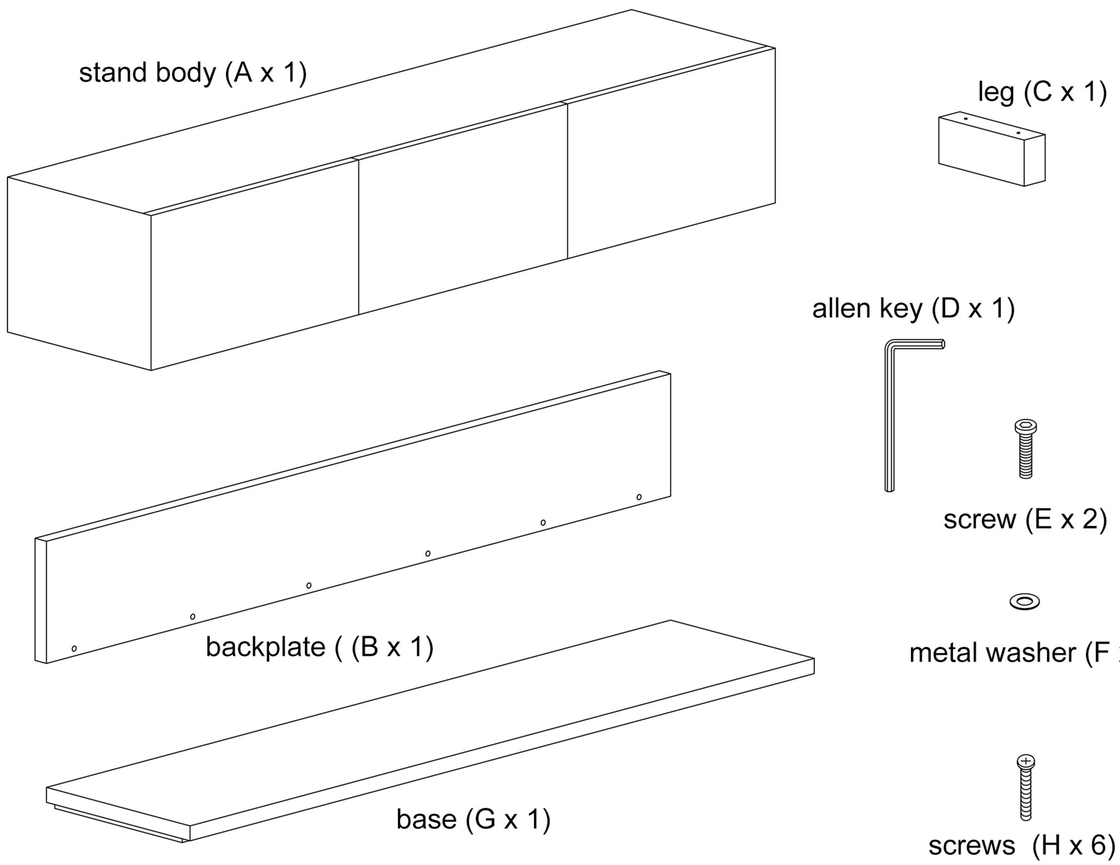

Note: Do not fully tighten all bolts until all parts are in place. Failure to follow these instructions may cause the bolt to misalign during assembly.

Installation Guide

Step 1

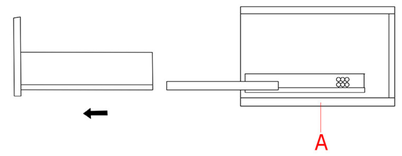

1. Invert the stand body (A) and pull out one drawer at the end of the stand body where you want to install the leg.

Step 2

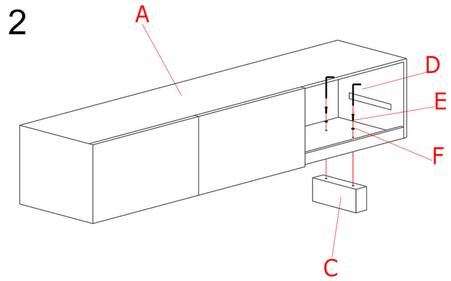

2. Put the screws (E) through the metal washers (F) and insert them into the holes on the bottom of the stand body (A) where the drawer has been pulled out in the step1. Align the leg (C) to the holes on the bottom of the stand body and secure it to the stand body by tightening the screws with the Allen key (D).

Step 3

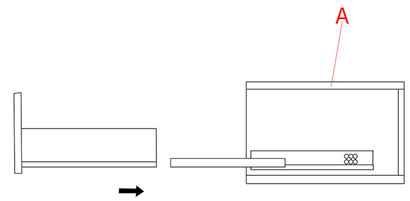

3. Install back the drawer to the stand body (A).

Step 4

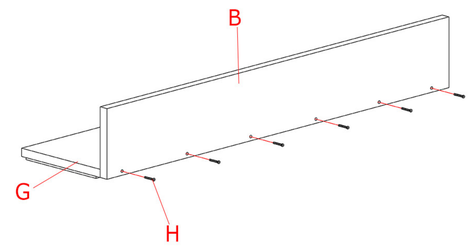

4. Align and fix the backplate (B) to the base (G) with screws (H) tightly.

Step 5

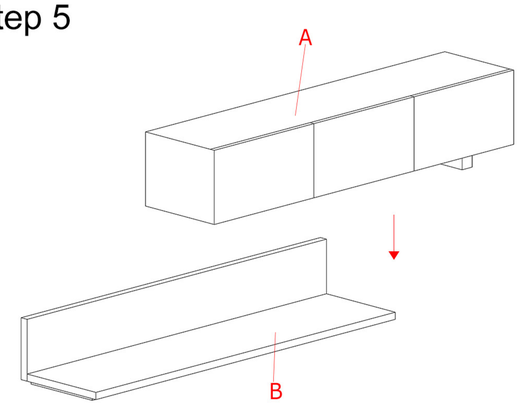

5. Place the stand body (A) on the base (B) as you like.
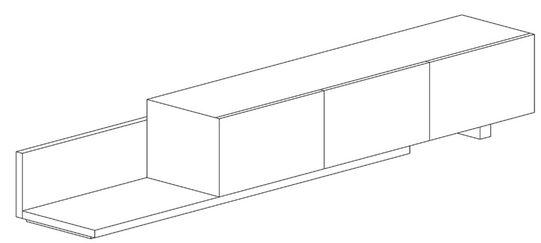
Step 6