ASSEMBLY INSTRUCTIONS

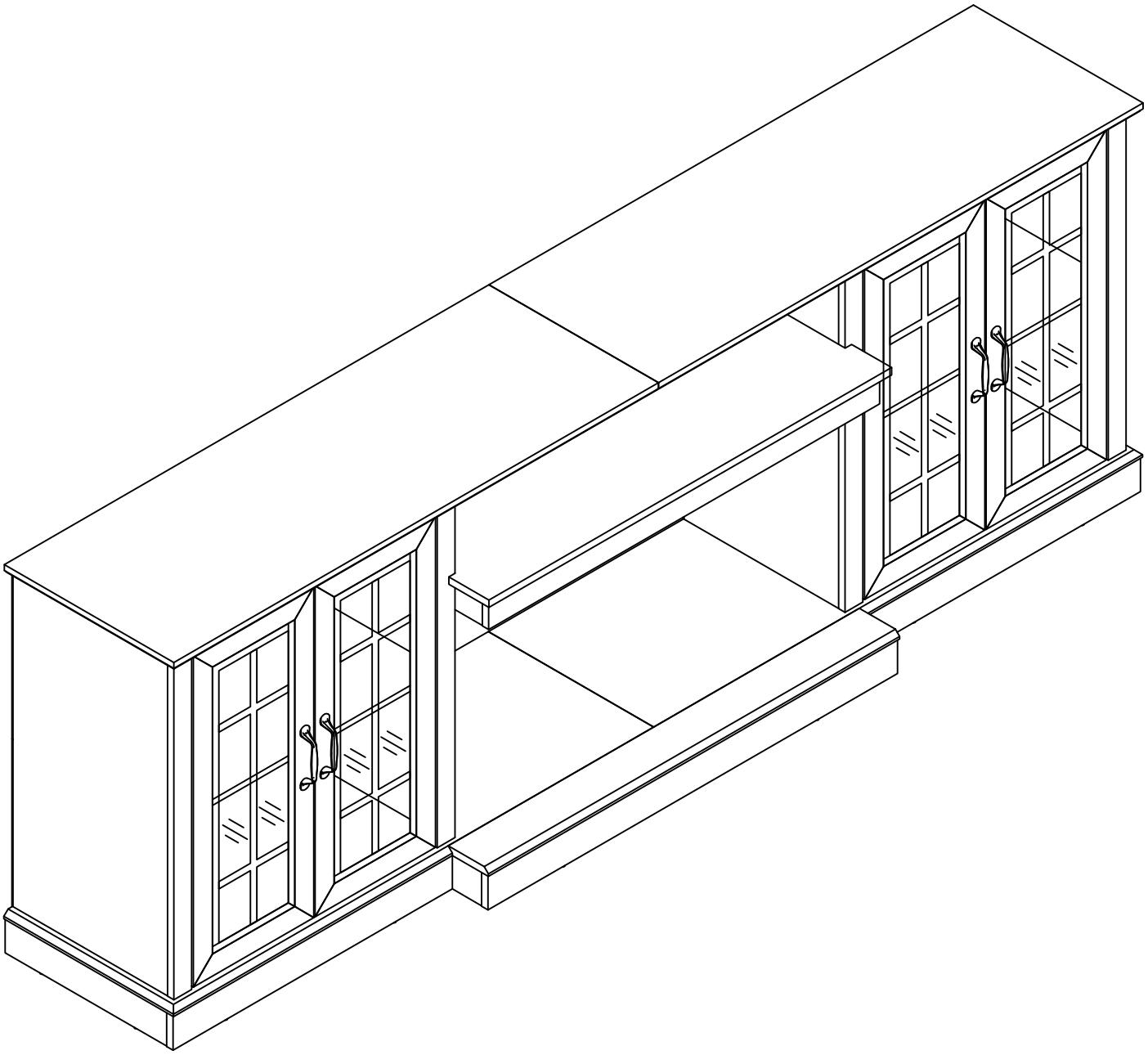

WARNING



Children have died from furniture tip-over. To reduce the risk of furniture tip-over:

- NEVER allow children to stand, climb or hang on drawers, doors, or shelves.
- NEVER open more than one drawer at a time.
- Place heaviest items in the lowest drawer.
- Read and follow all assembly instructions.

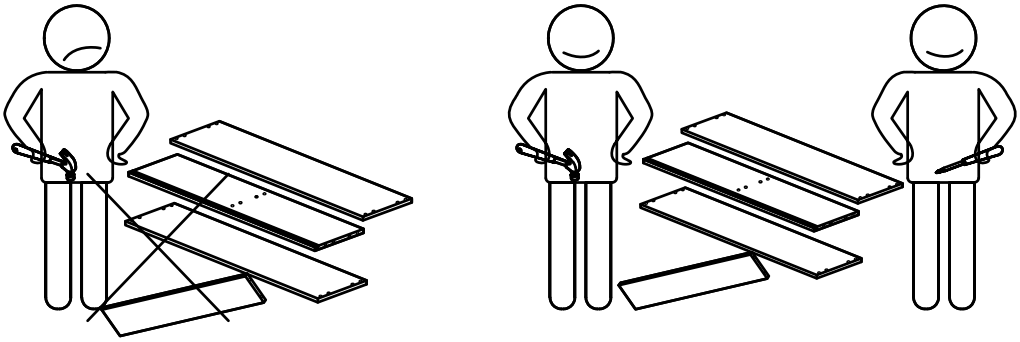

We recommend at least 2 people for the assembly.

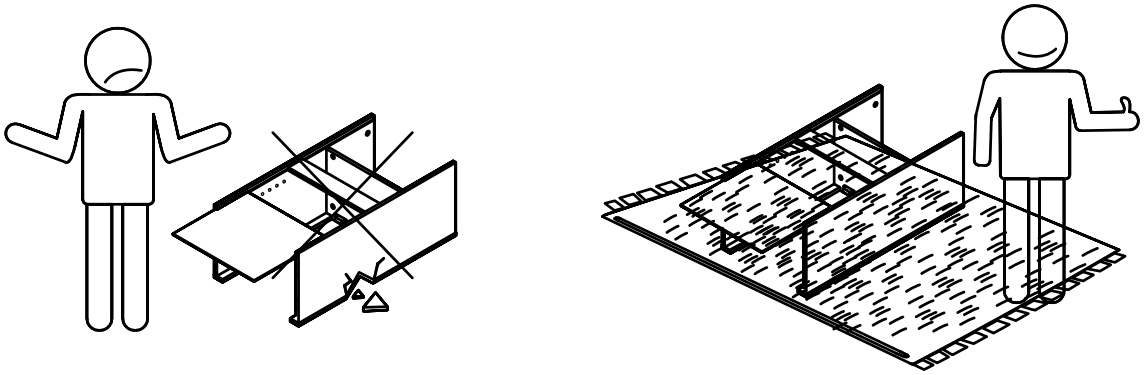

To prevent any damage during assembly, place a mat under the pieces.

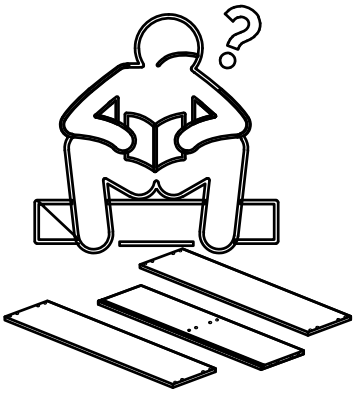



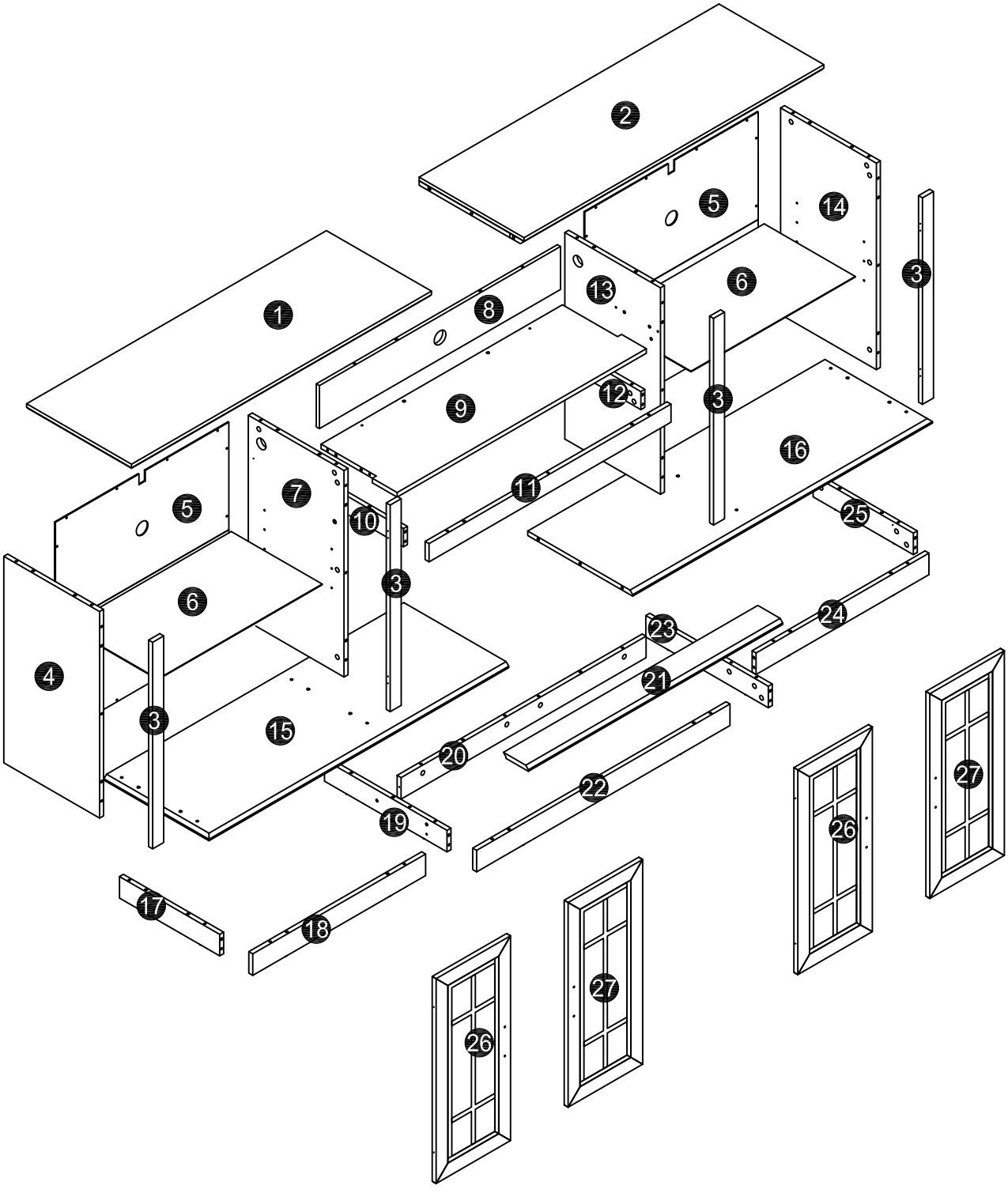
2
5
14
3
6
13
8
1
12
3
9
16
7
11
5
10
25
3
6
23
24
4
21
3
15
20
27
22
26
19
17
18
27
26

PARTS LIST

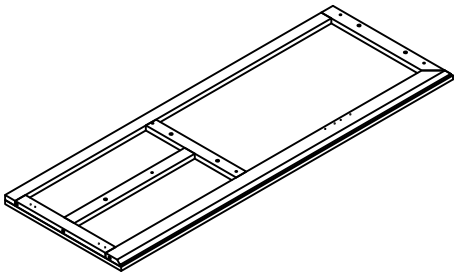

1 x 1

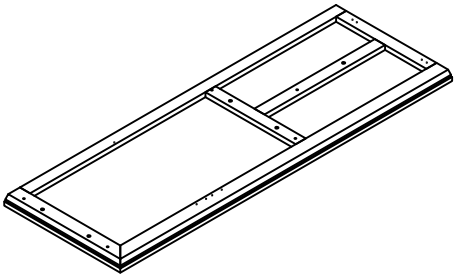

2 x 1

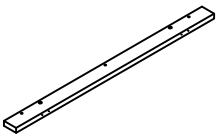

3 x 4

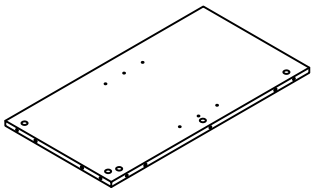

4 x 1

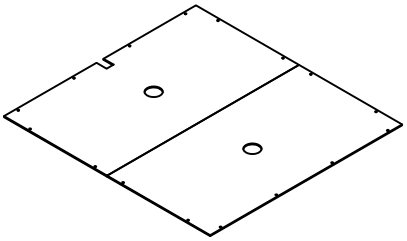

5 x 2

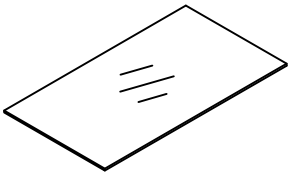

6 x 2

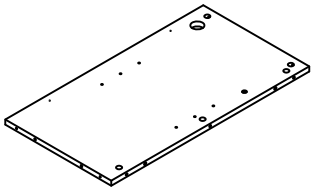

7 x 1

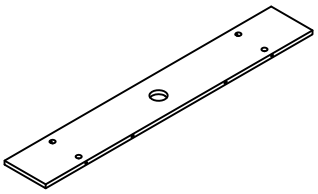

8 x 1

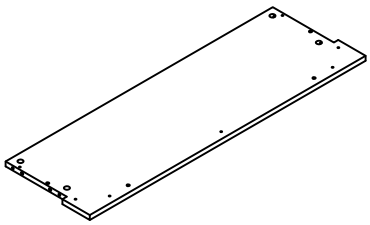

9 x 1

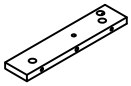

10 x 1

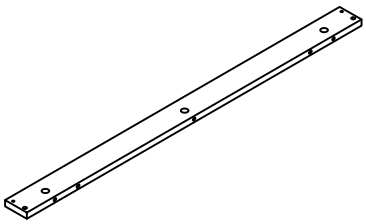

11 x 1

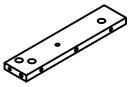

12 x 1

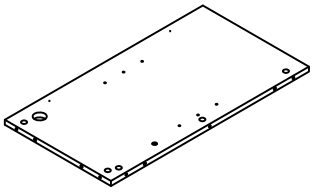

13 x 1

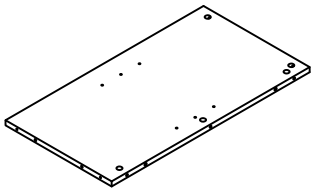

14 x 1

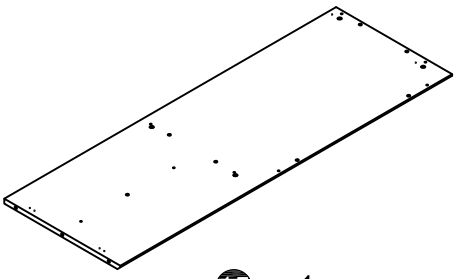

15 x 1

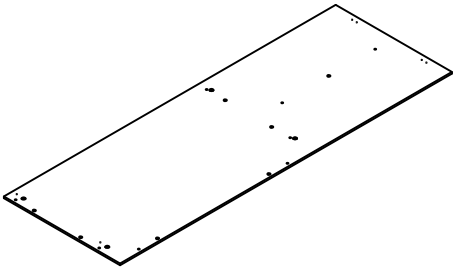

16 x 1

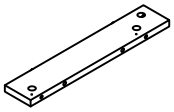

17 x 1

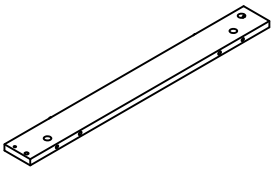

18 x 1

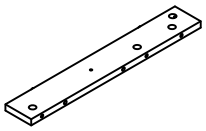

19 x 1

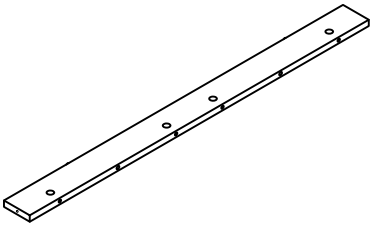

20 x 1

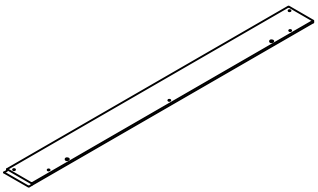

21 x 1

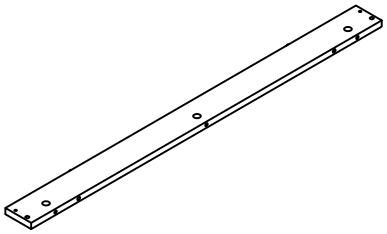

22 x 1

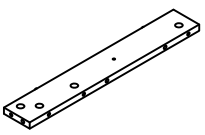

23 x 1

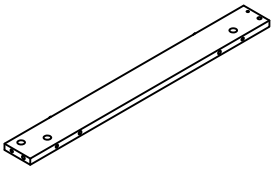

24 x 1

PARTS LIST

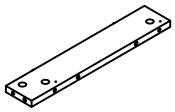

25 x 1

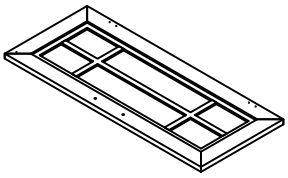

26 x 2

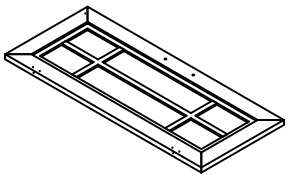

27 x 2

HARDWARES

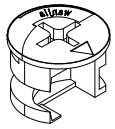

Ø15X11mm

A x 64



Ø6.5X35mm

B x 64



Ø8X30mm

C x 66

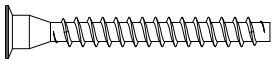

Ø6.3X50mm

D x 8

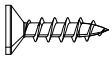

Ø3.5X14mm

E x 52

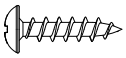

Ø3X14mm

F x 40

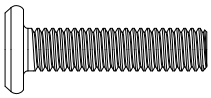

M6X30mm

G x 2



Ø4X19mm

H x 8

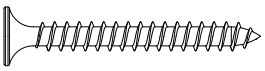

Ø4X40mm

I x 2



J x 4



K x 4

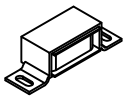

L x 4

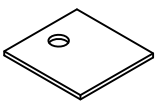

M x 4

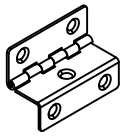

N x 8

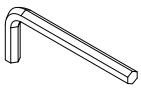

4X65mm

O x 1

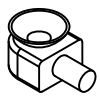

P x 8

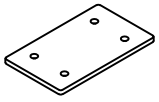

Q x 4

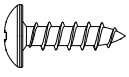

Ø4X14mm

R x 16

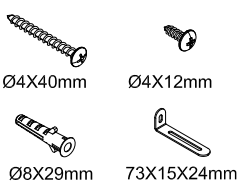

S x 2

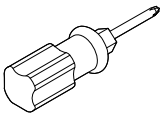

T x 1

SPARE PARTS

The spare parts are the additional parts provided in case of missing or damaged ones. Keep the spare parts and tools for future use.

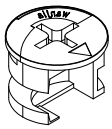

Ø15X11mm

A x 3

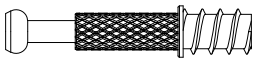

Ø6.5X35mm

B x 3



Ø8X30mm

C x 3

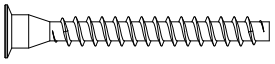

Ø6.3X50mm

D x 1

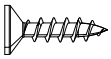

Ø3.5X14mm

E x 3

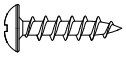

Ø3X14mm

F x 3

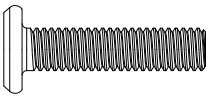

M6X30mm

G x 1



Ø4X19mm

H x 1

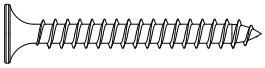

Ø4X40mm

I x 1



P x 1

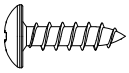

Ø4X14mm

R x 2

CAM LOCK FASTEN SYSTEM

Insert the cam bolt into the hole, then insert the cam lock and tighten.

1

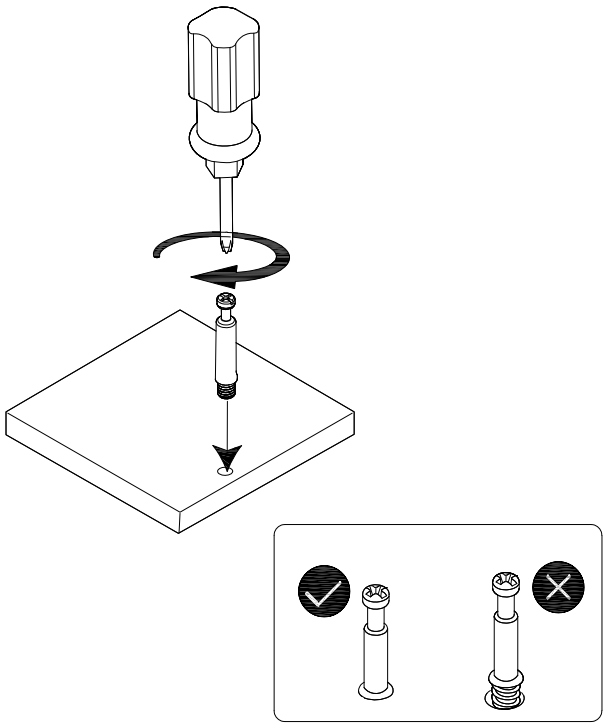

2

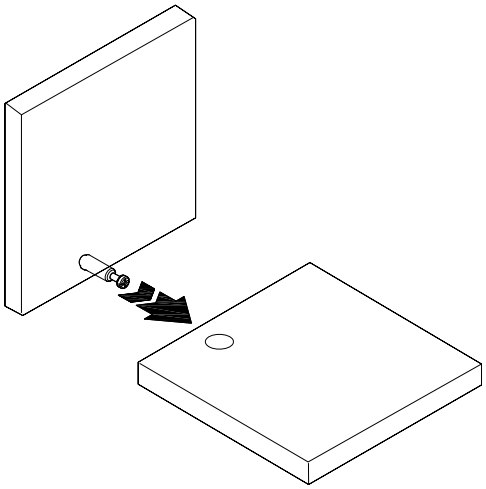

3

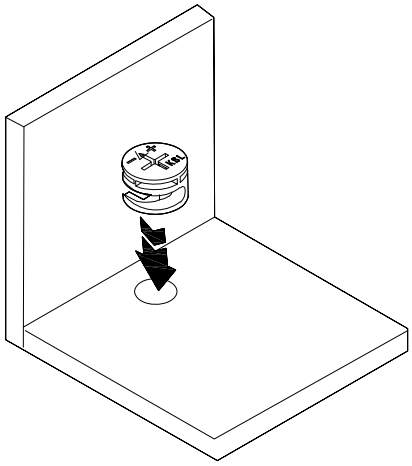

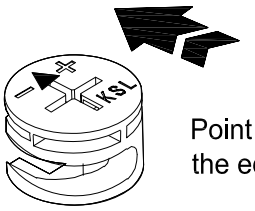

Point the opening towards the edge of the board.

4

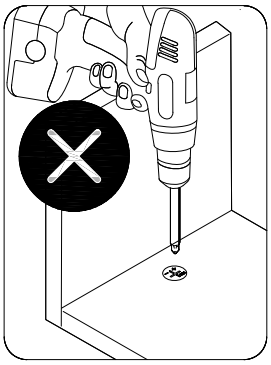

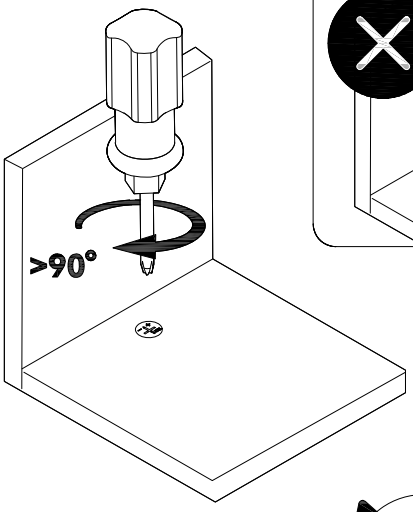

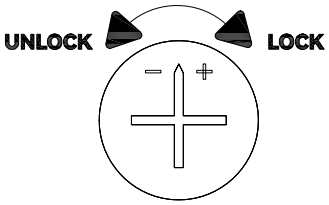

ASSEMBLY

1

Open the secondary component package and retrieve hardware for next assembly step.

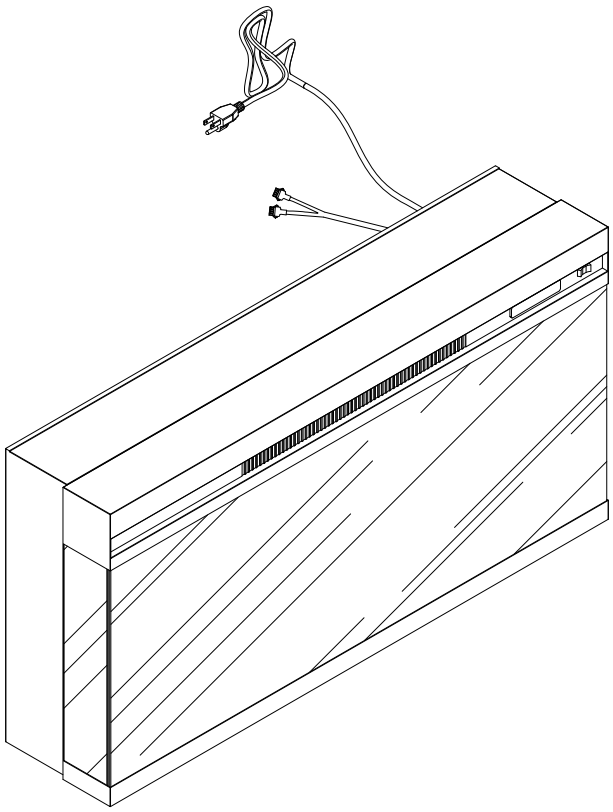



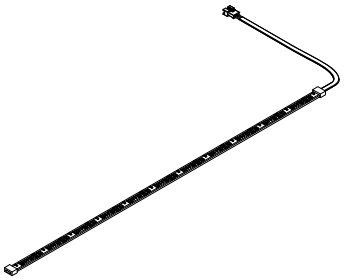

 Ø4X12mm	
Qty	X6

 M3X10mm	
Qty	X5

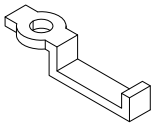	
Qty	X5

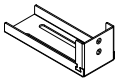	
Qty	X2

2

Ø6.5X35mm	Ø8X30mm
B x 9	C x 10

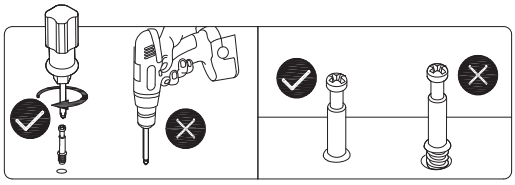

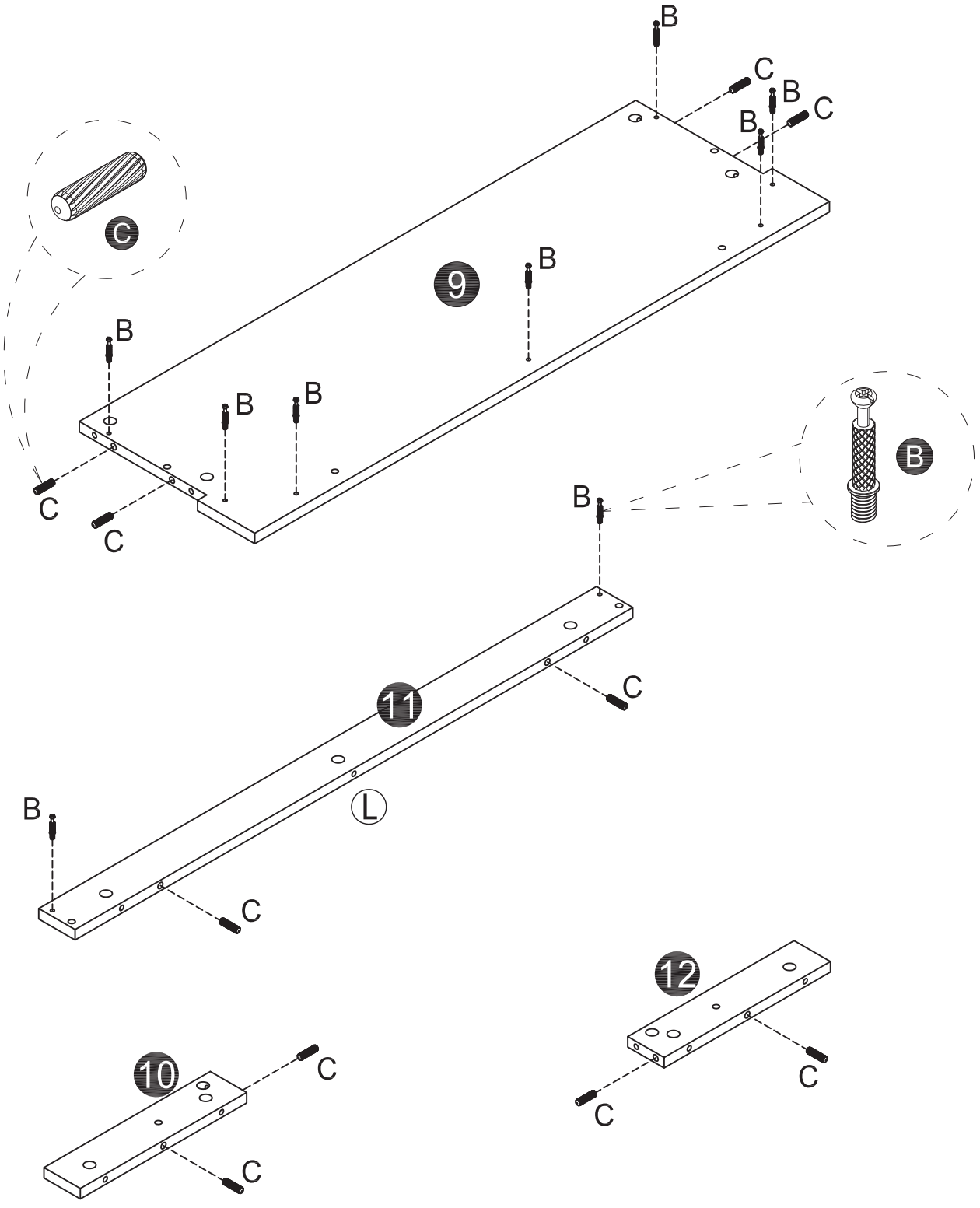

3

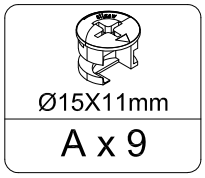

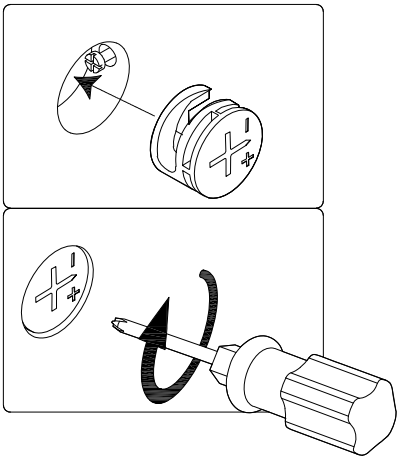

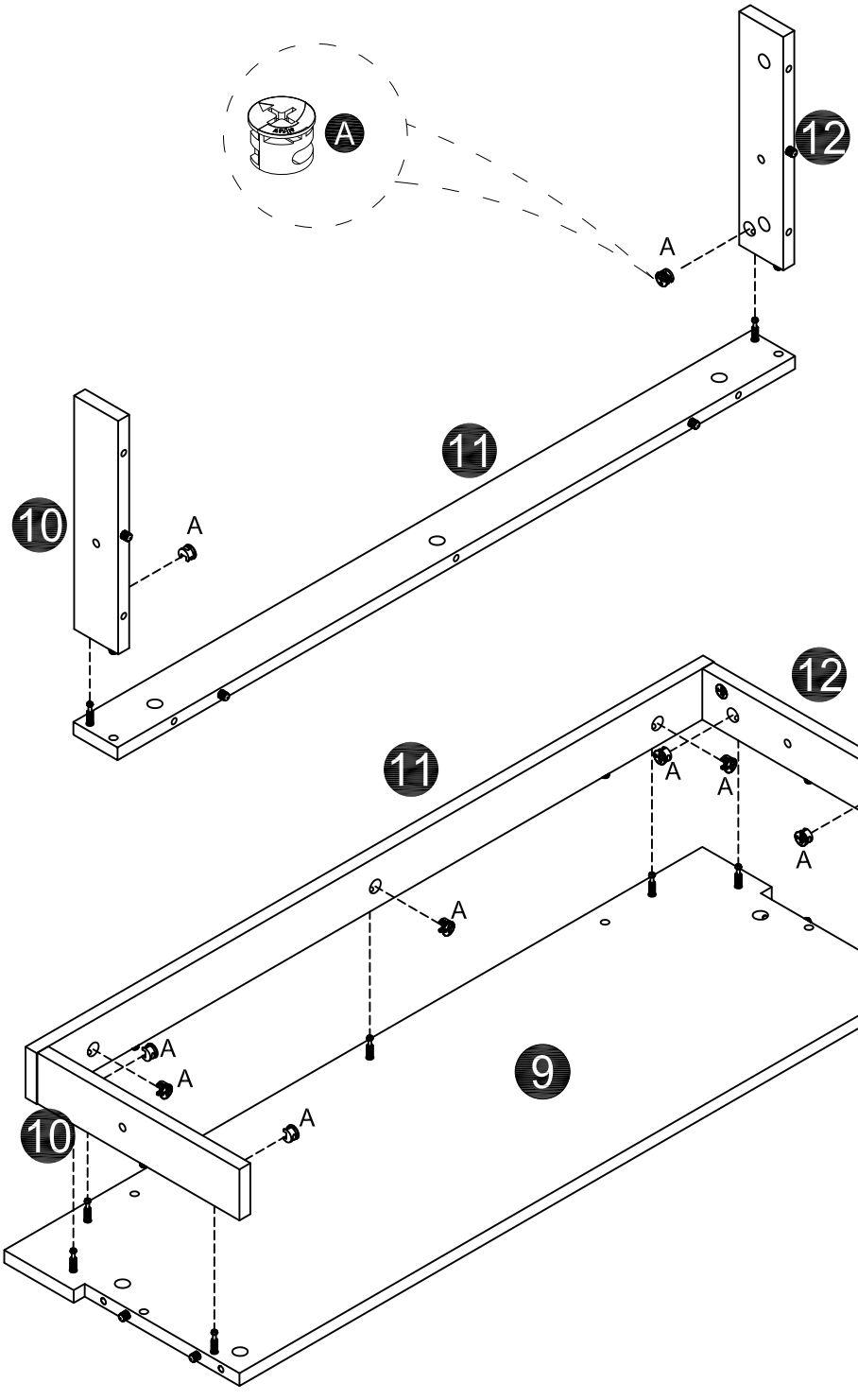

4

Ø15X11mm	Ø6.5X35mm	Ø8X30mm
A x 2	B x 2	C x 4

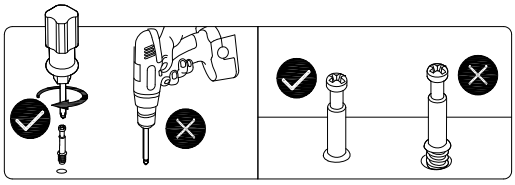

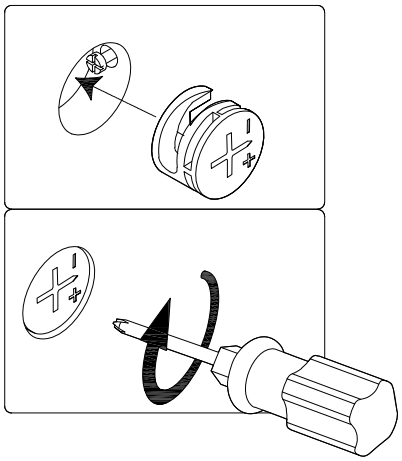

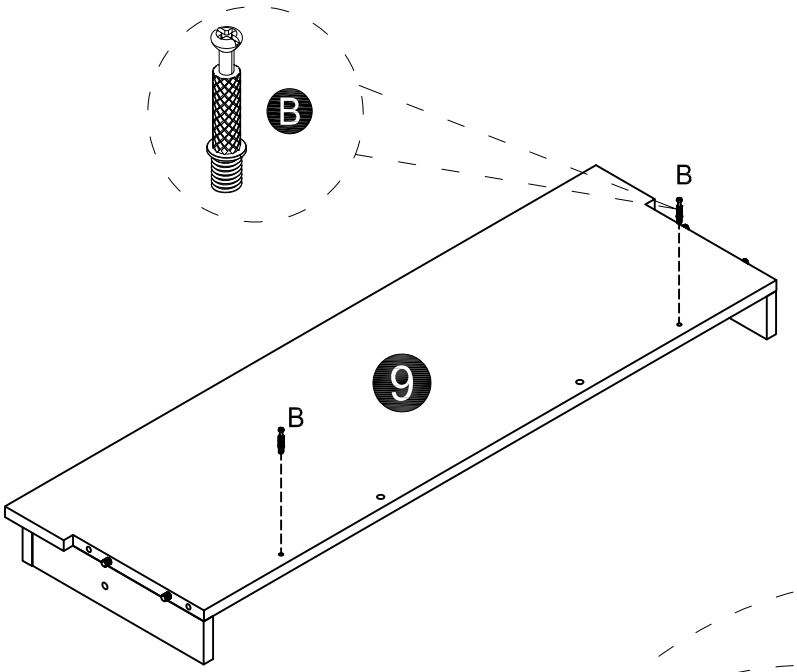

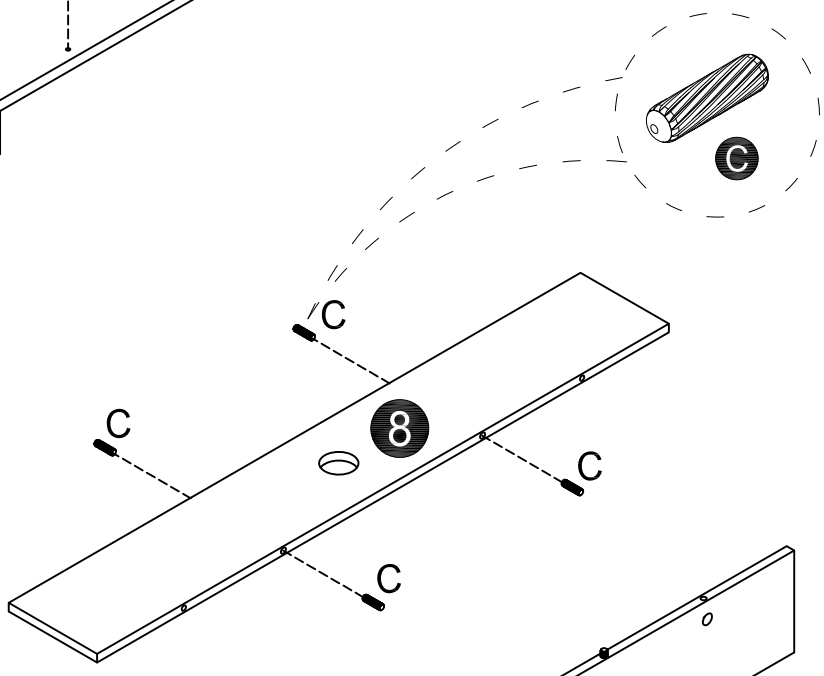

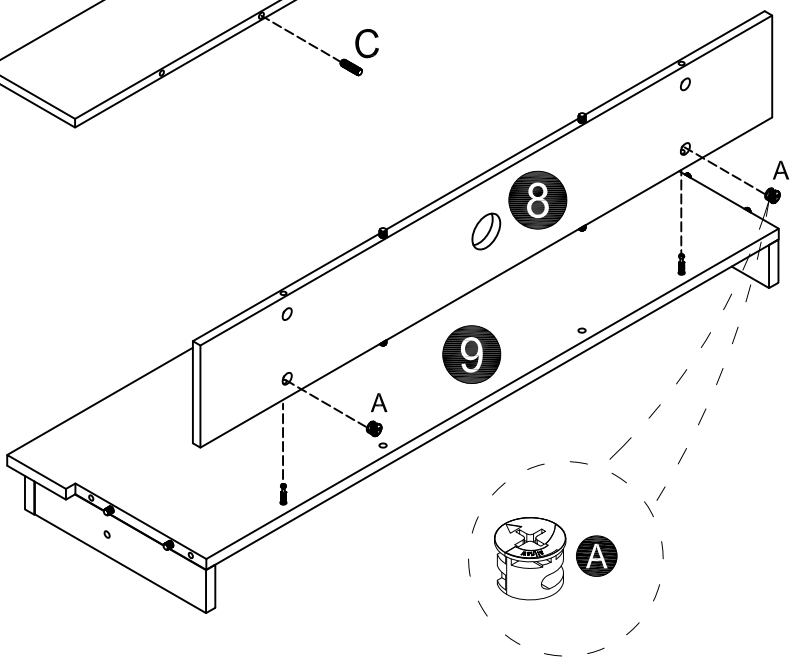

5

Ø6.5X35mm	Ø8X30mm
B x 10	C x 12

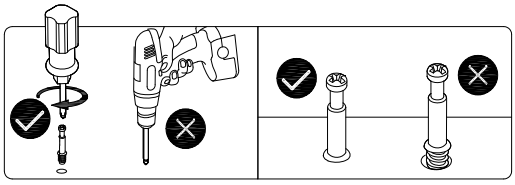

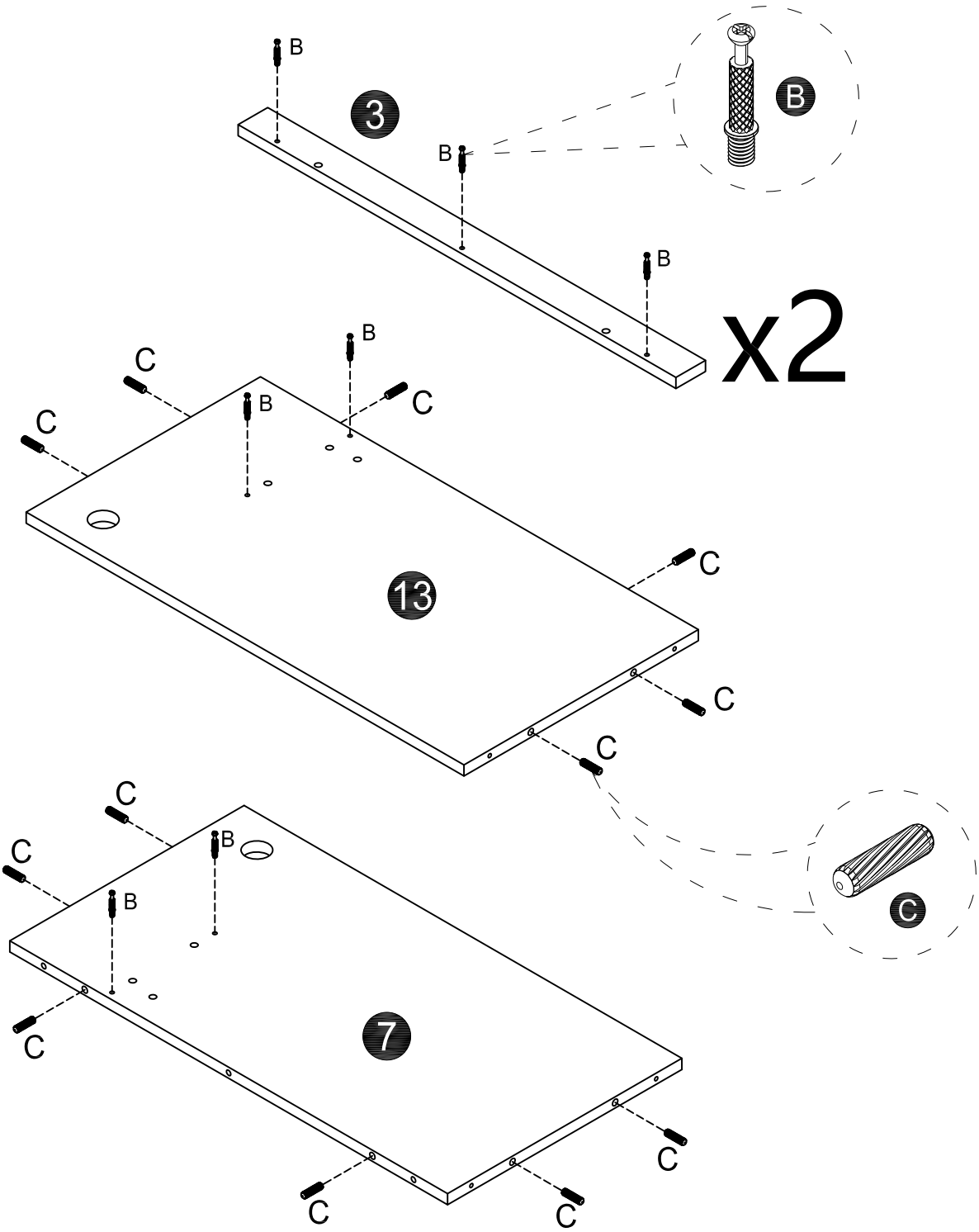

6

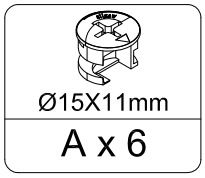

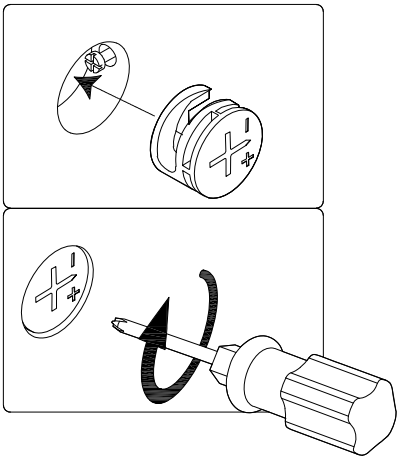

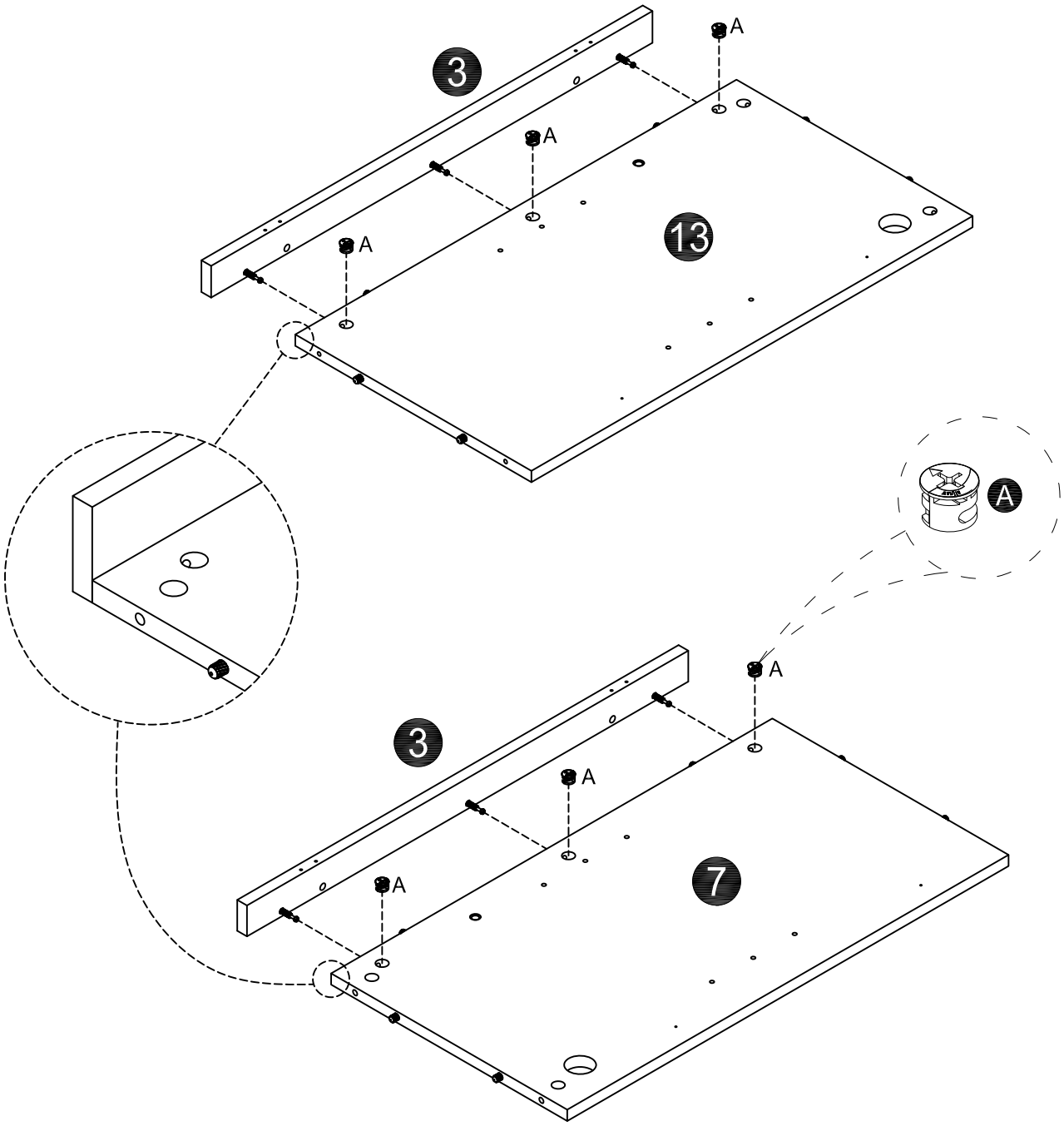

7

Ø6.5X35mm	Ø8X30mm
B x 6	C x 12

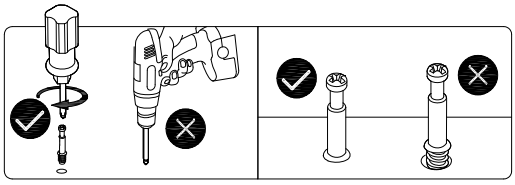

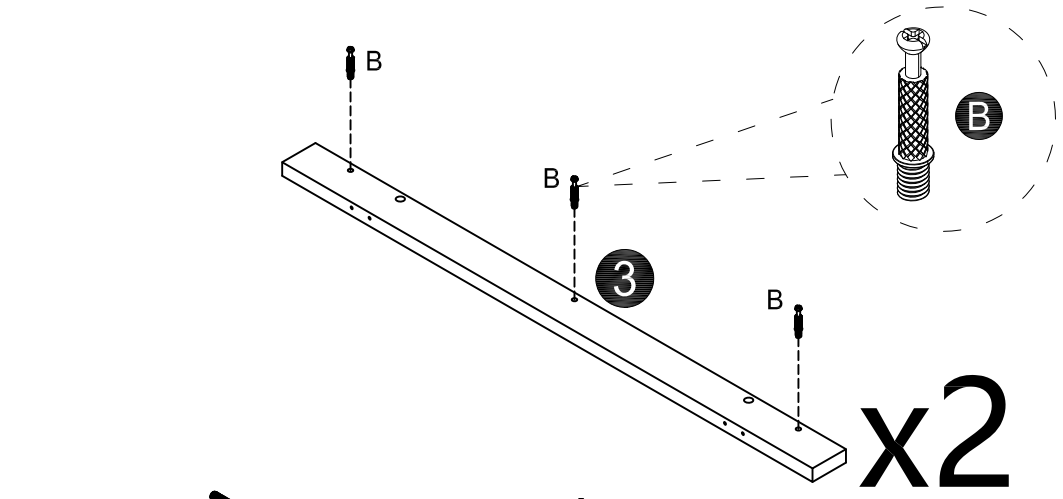

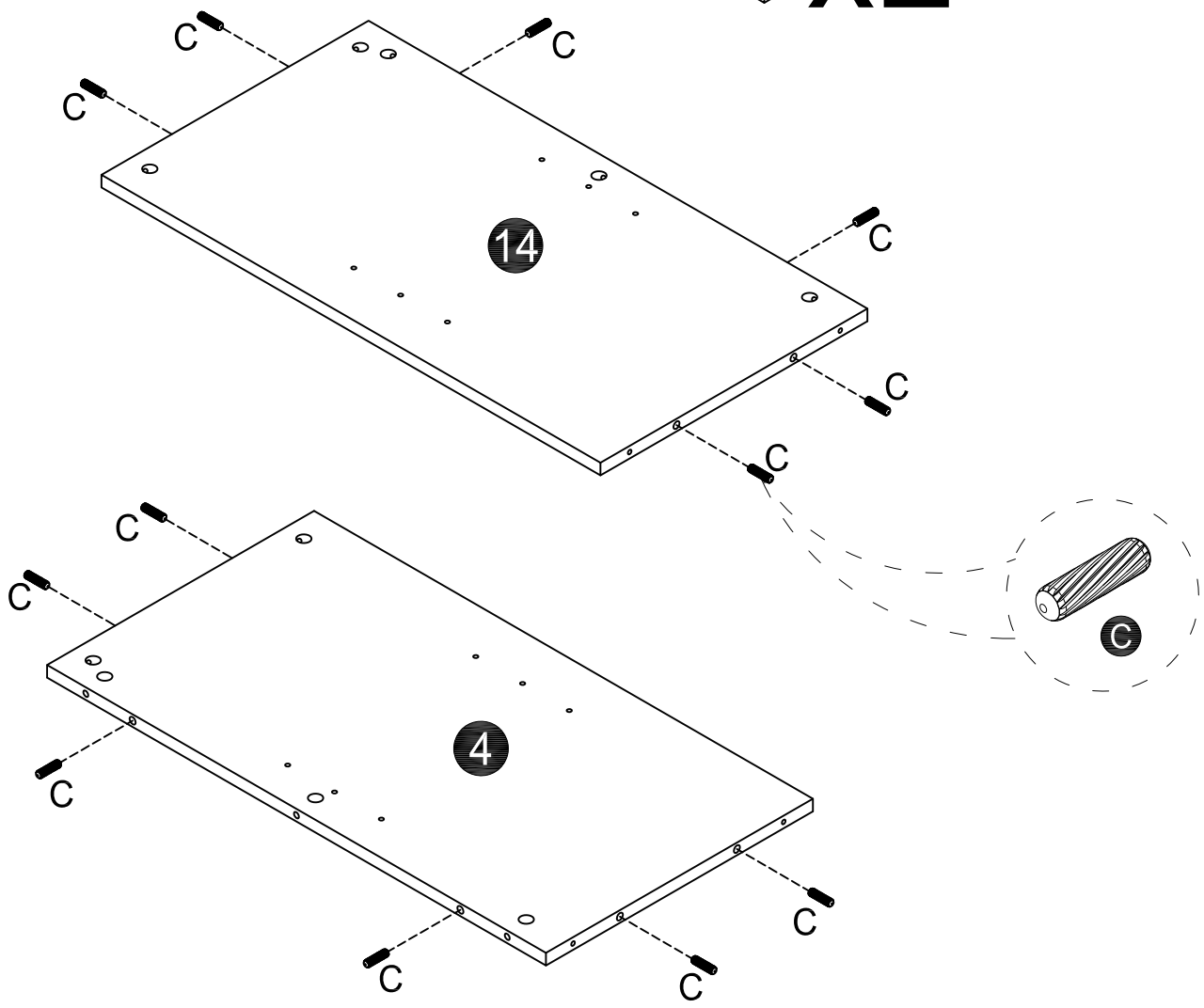

8

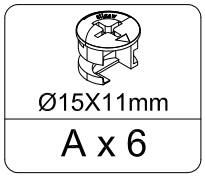

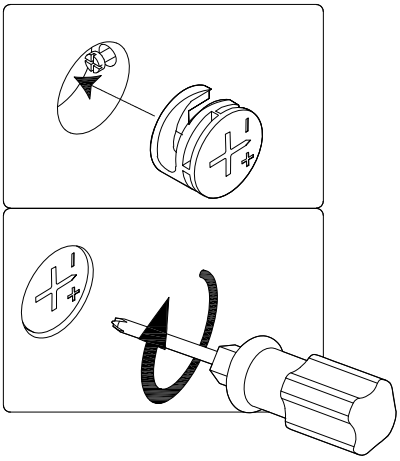

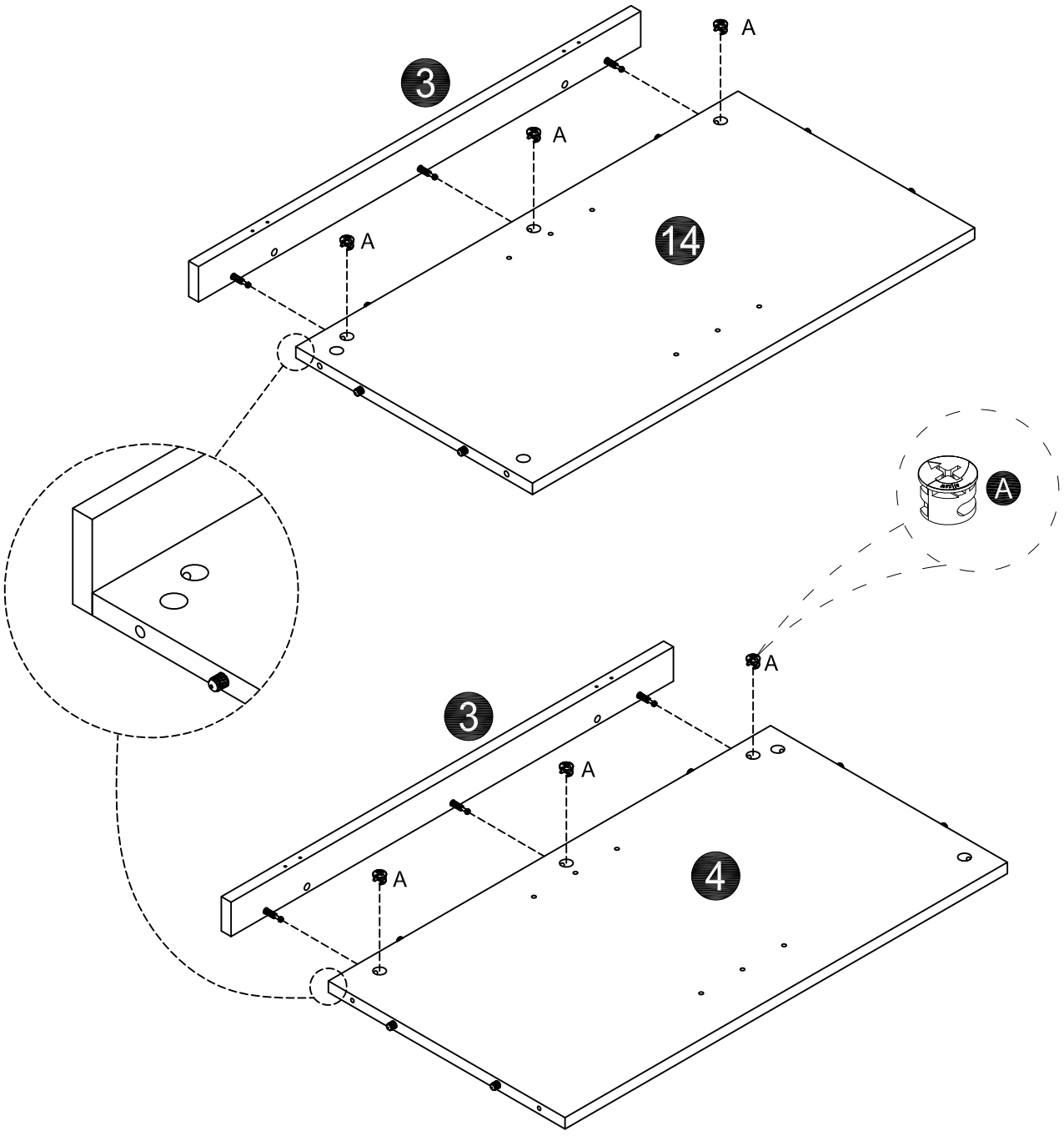

9

Ø6.5X35mm	Ø8X30mm	Ø3X14mm	
B x 10	C x 3	F x 8	L x 4

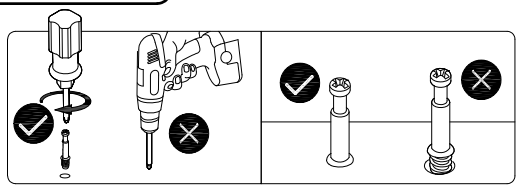

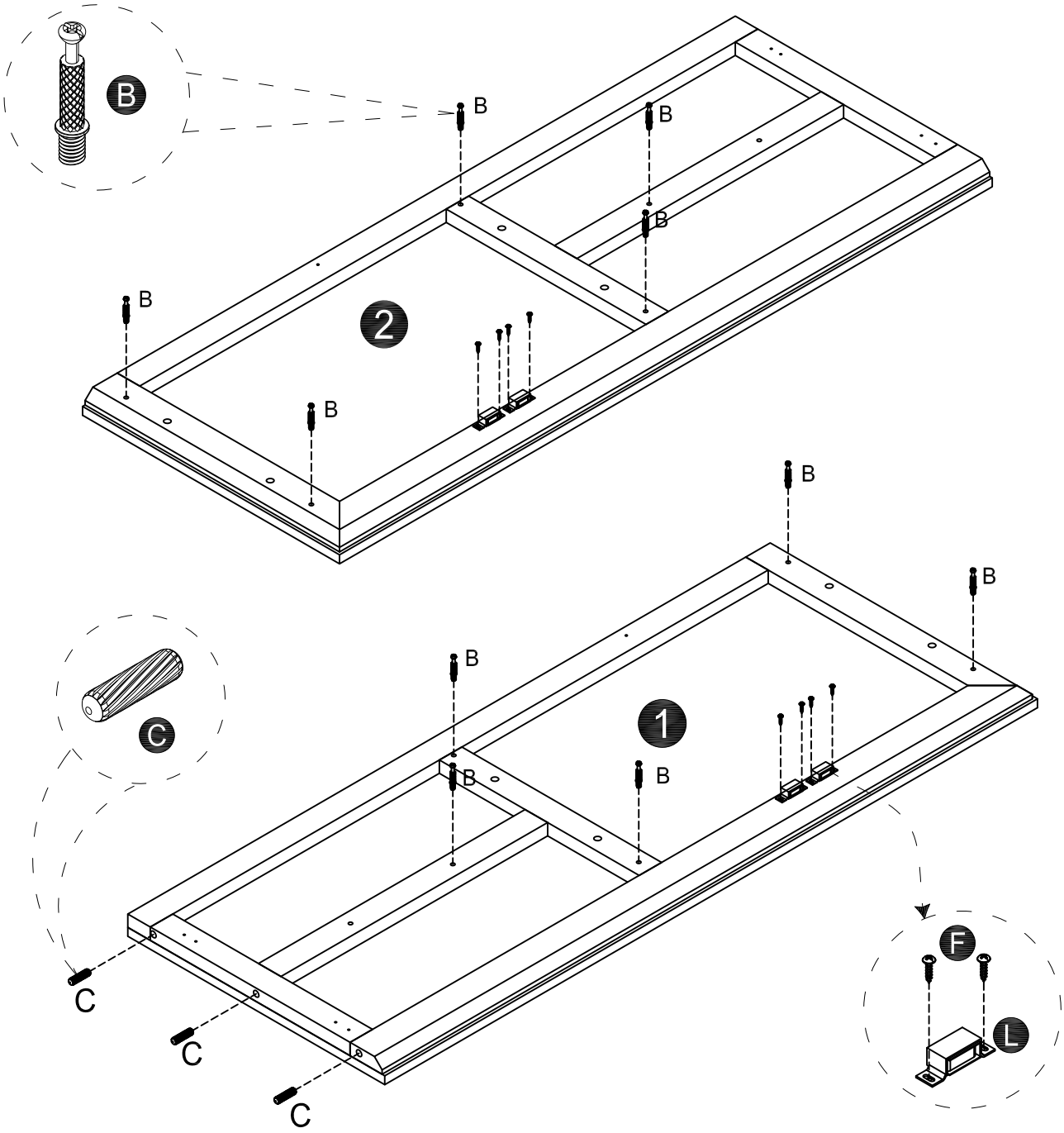

10

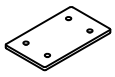	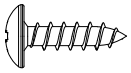 Ø4X14mm
Q x 2	R x 8

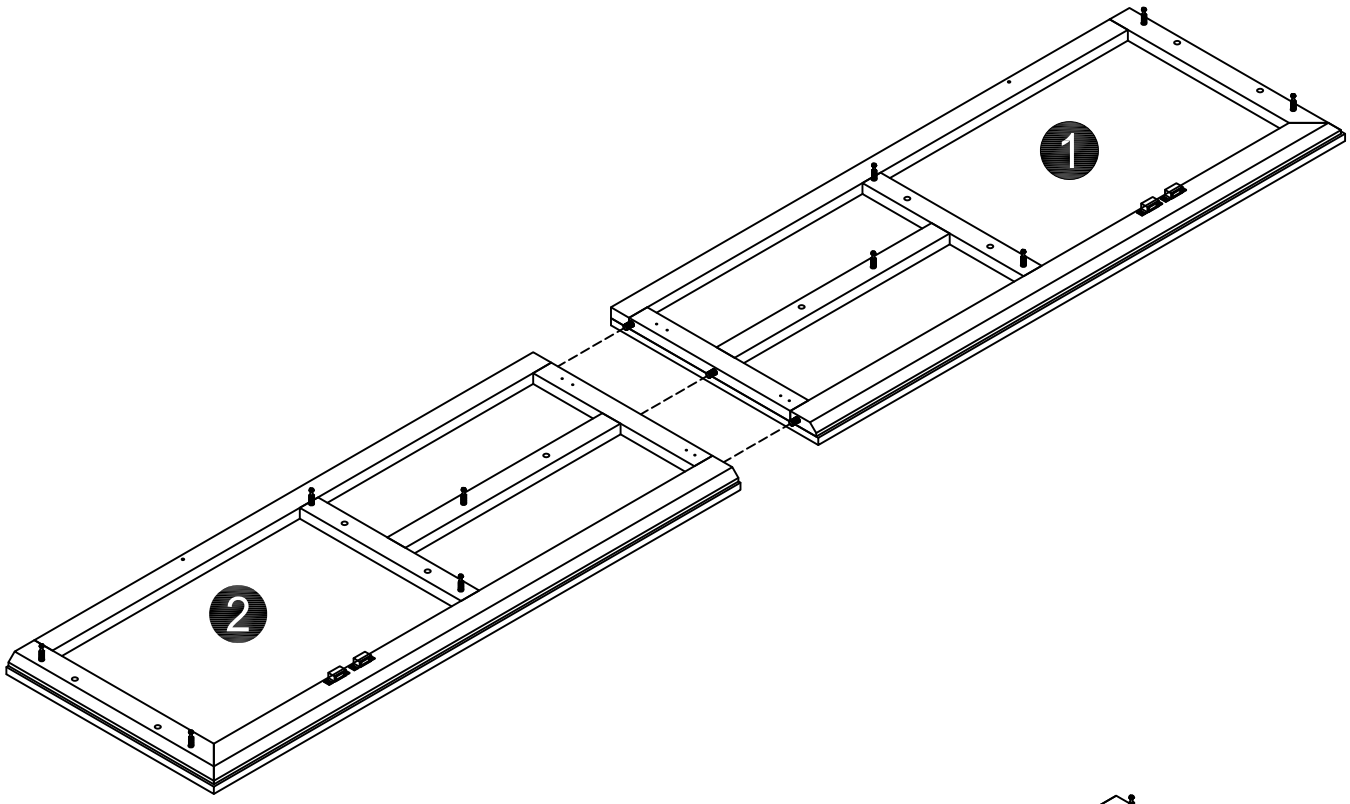

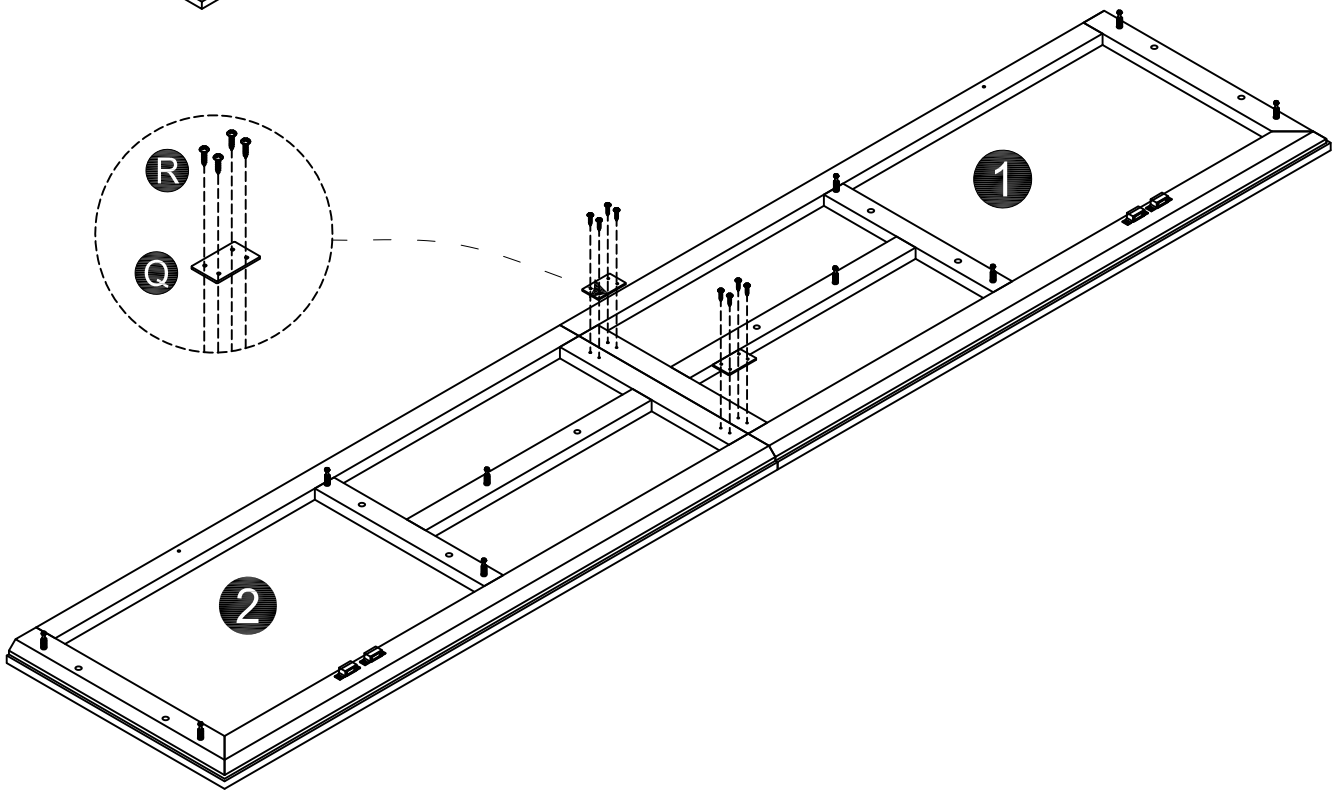

11

Ø15X11mm	M6X30mm	
A x 10	G x 2	O x 1

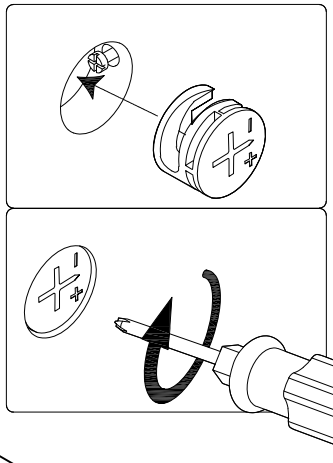

THIS STEP REQUIRES 2 PEOPLE

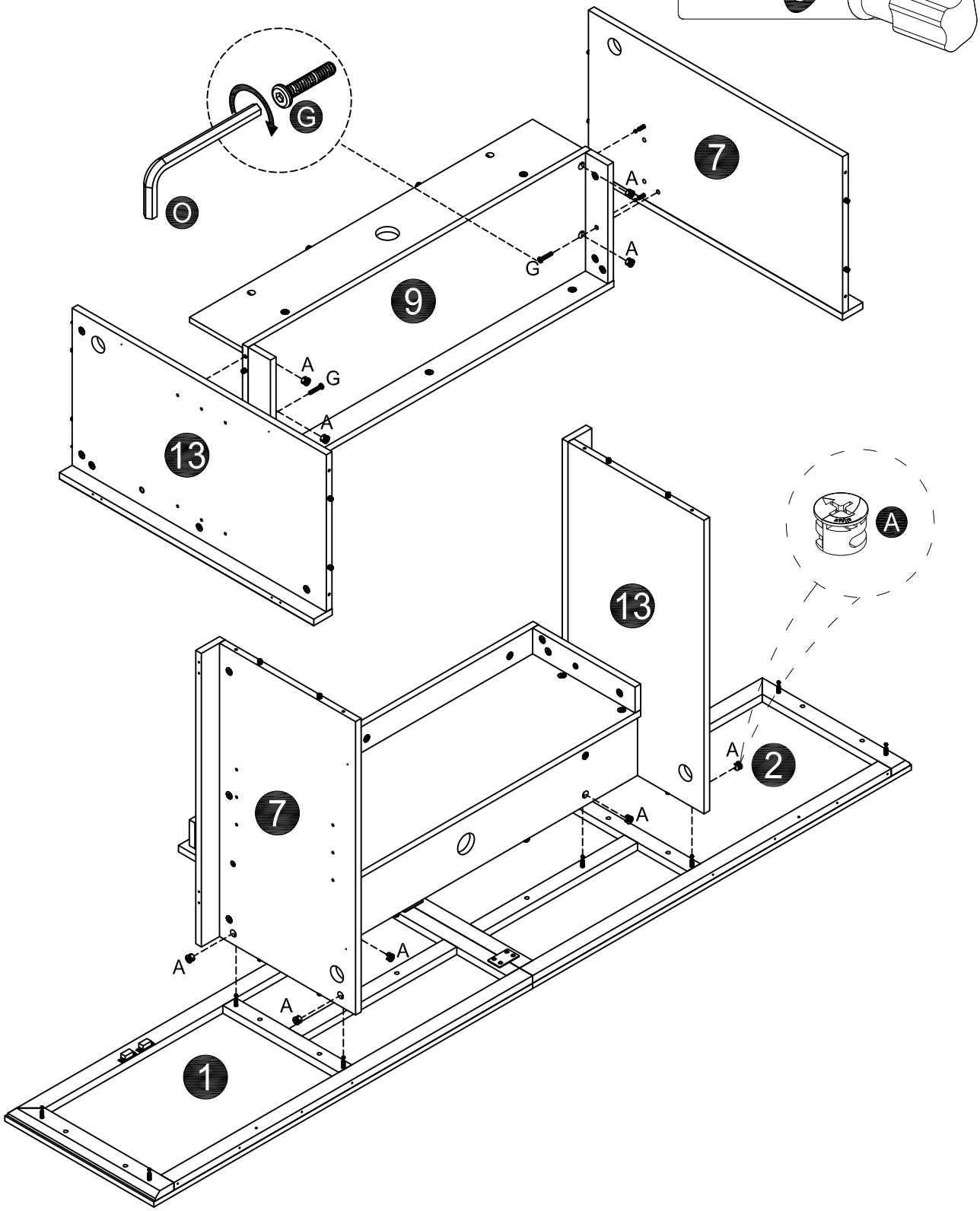

12

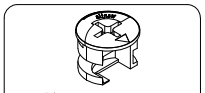

Ø15X11mm

A x 4

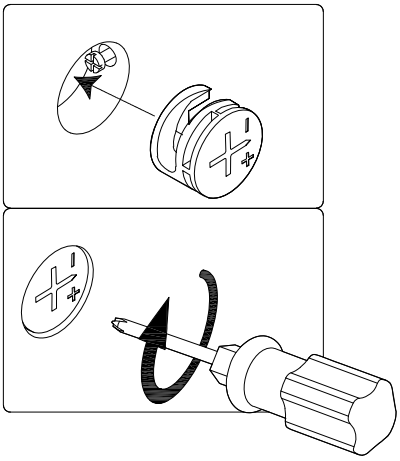

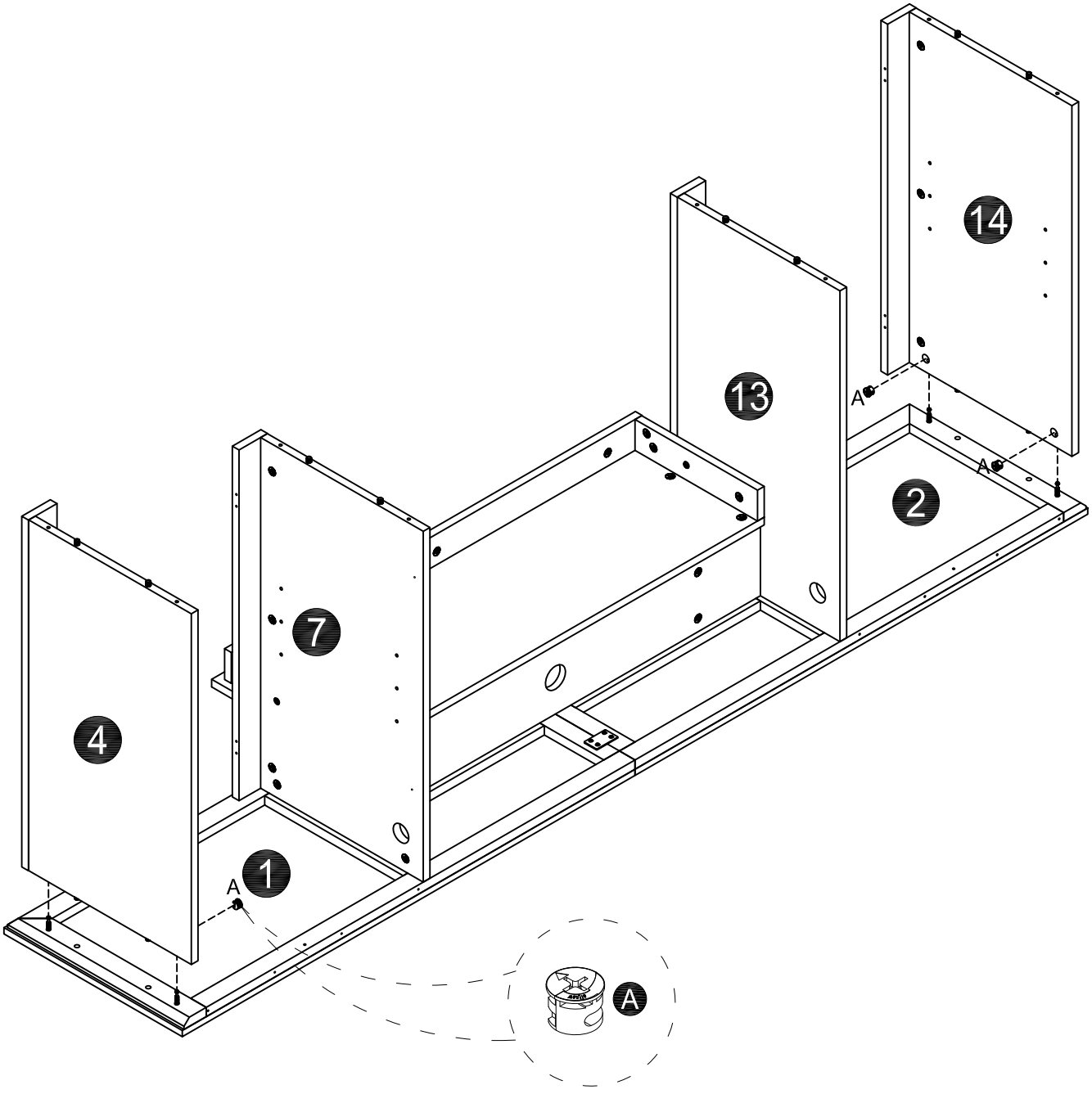

13

Ø8X30mm		Ø4X14mm
C x 3	Q x 2	R x 8

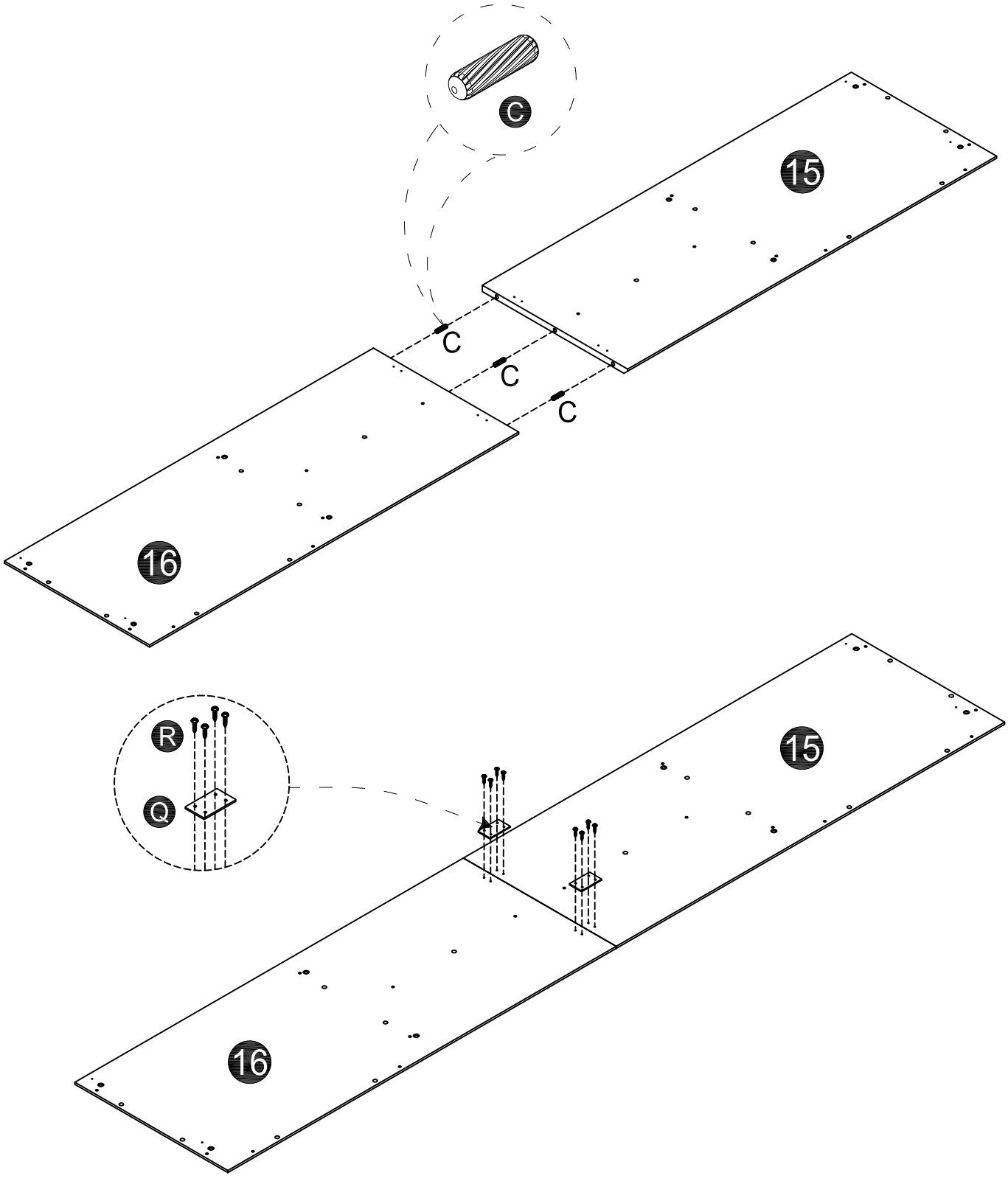

14

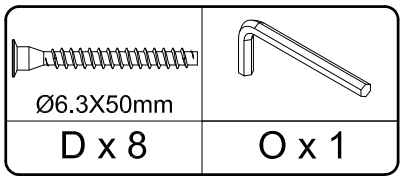

The base plate is composed of two boards joined together. During the installation process, please be careful.

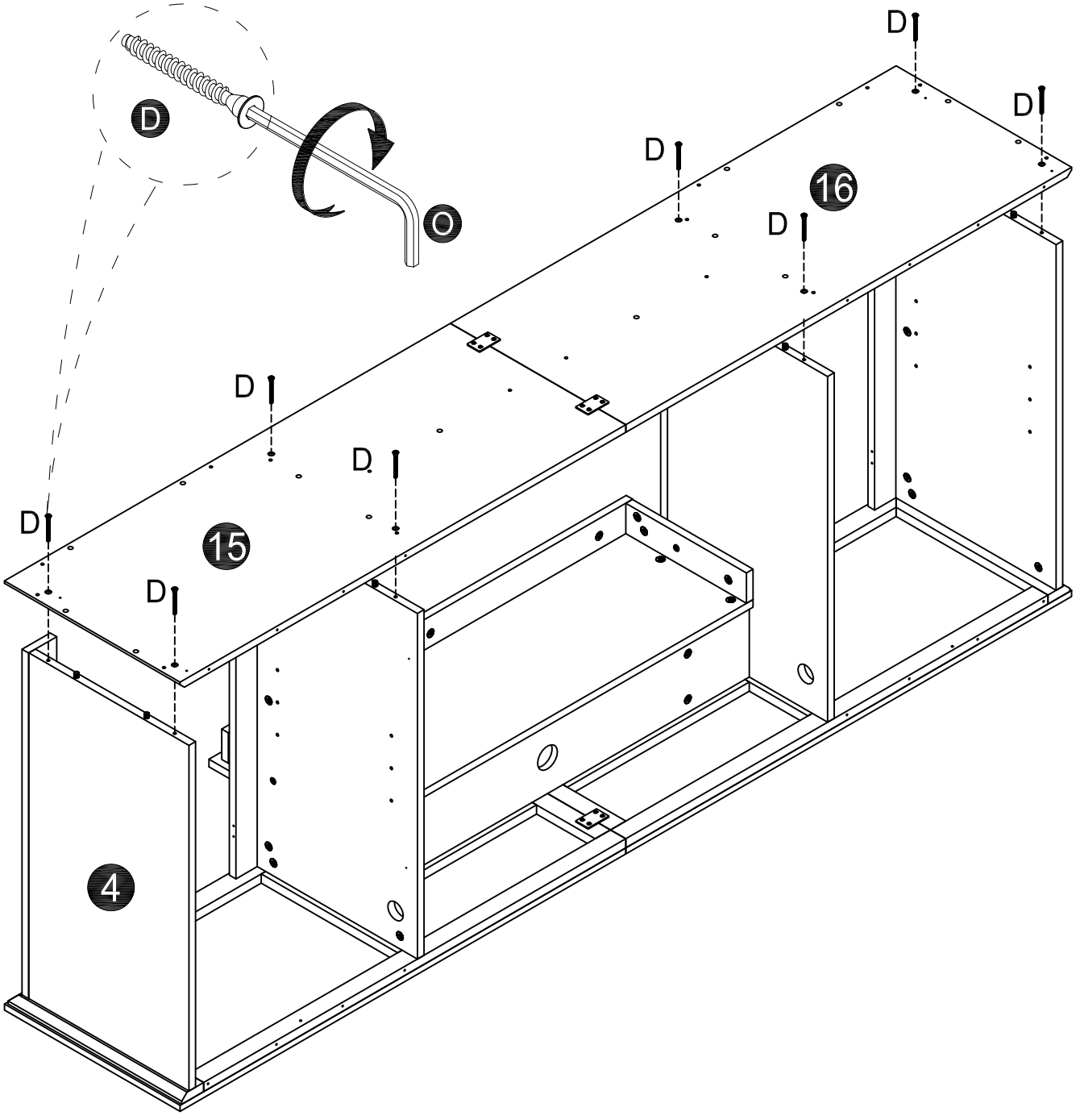

15

Ø6.5X35mm	Ø8X30mm	Ø3.5X14mm	
B x 2	C x 11	E x 2	J x 2

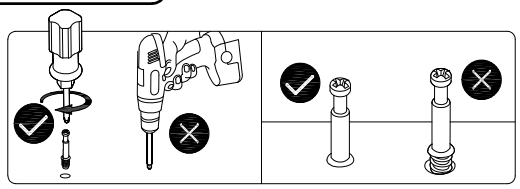

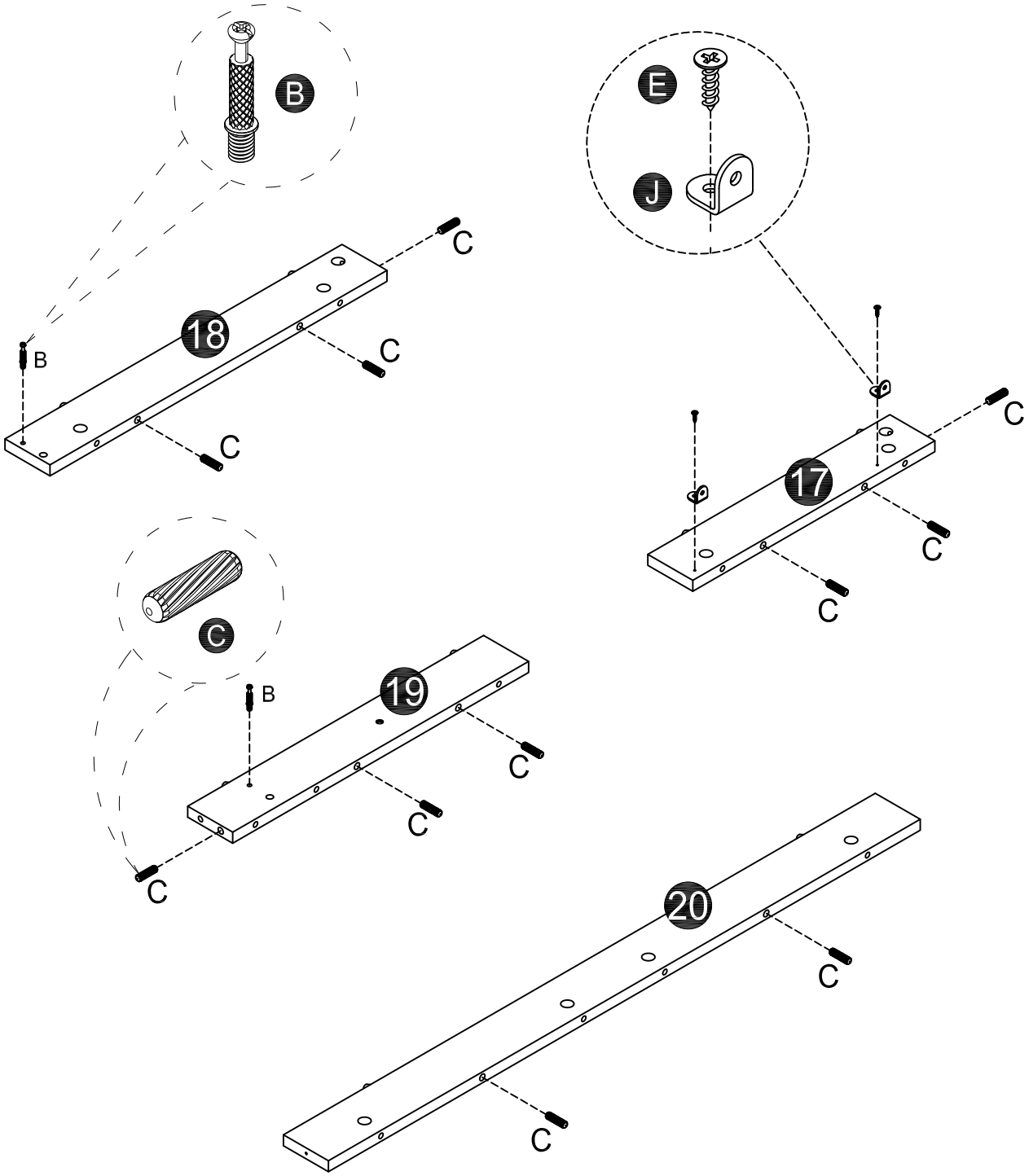

16

Ø6.5X35mm	Ø8X30mm	Ø3.5X14mm	
B x 4	C x 11	E x 2	J x 2

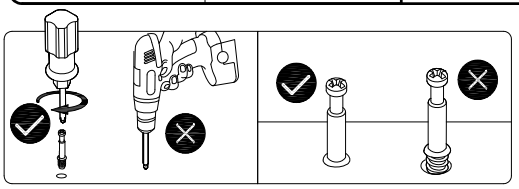

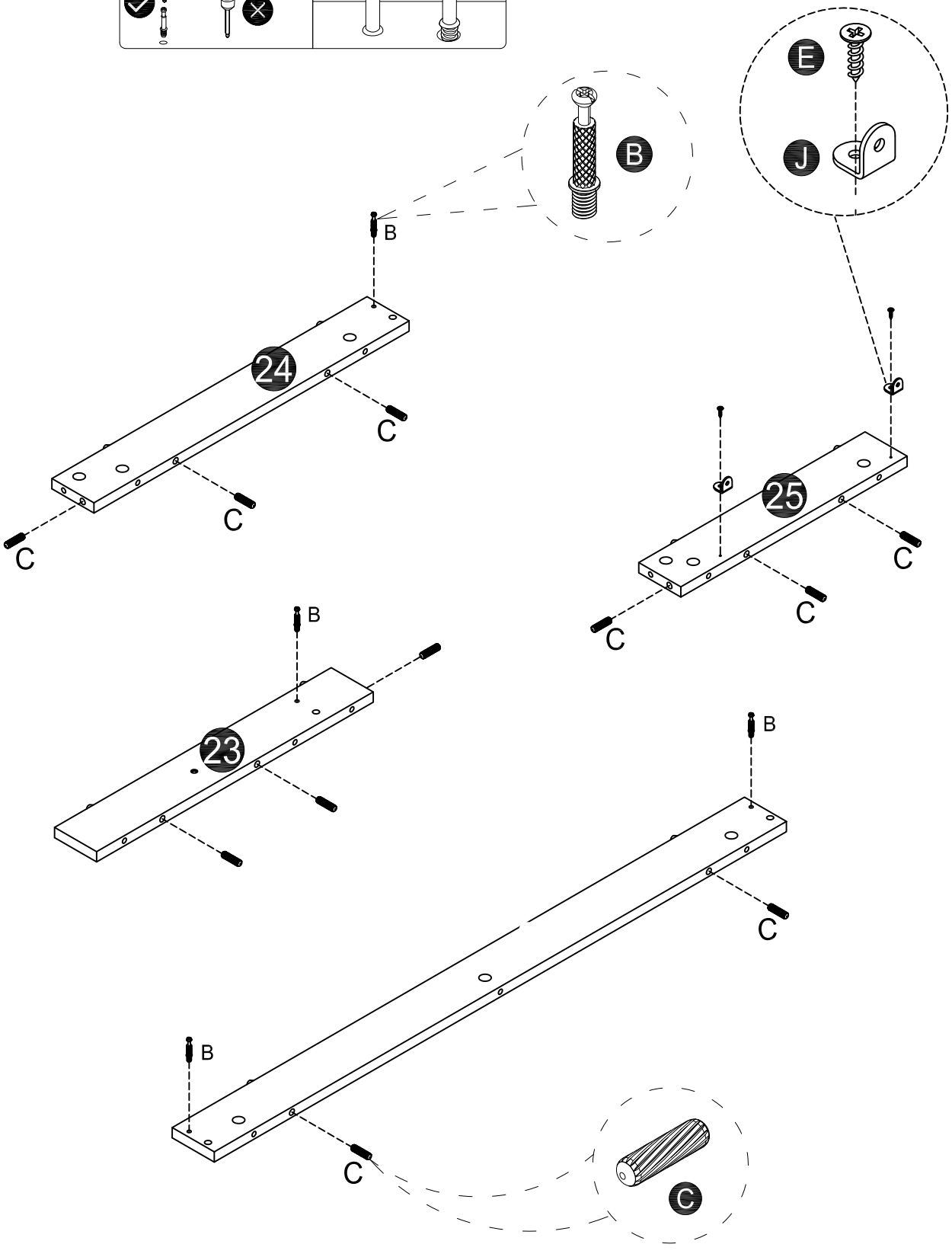

17

Ø15X11mm	Ø6.5X35mm
A x 4	B x 5

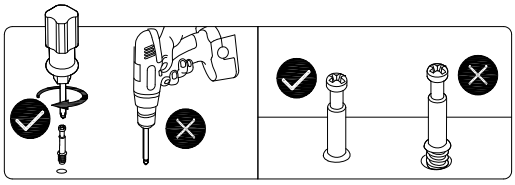

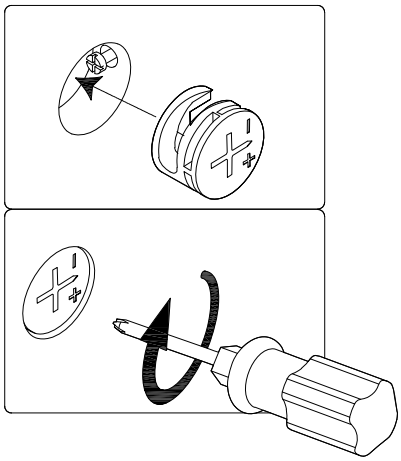

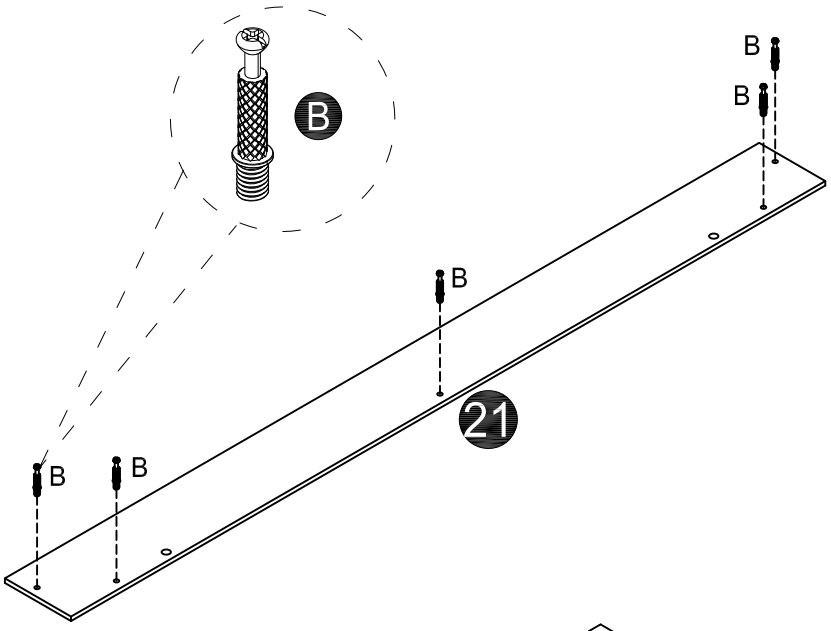

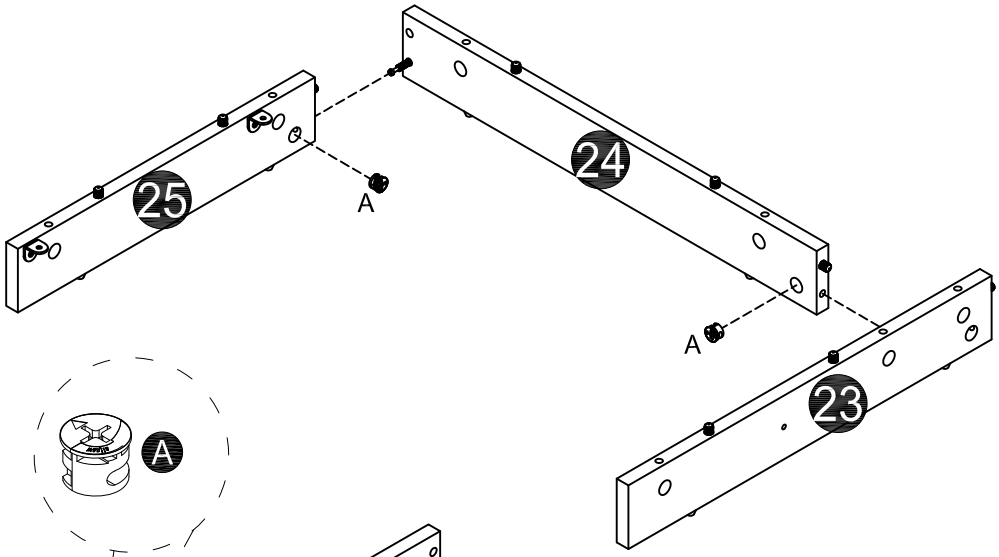

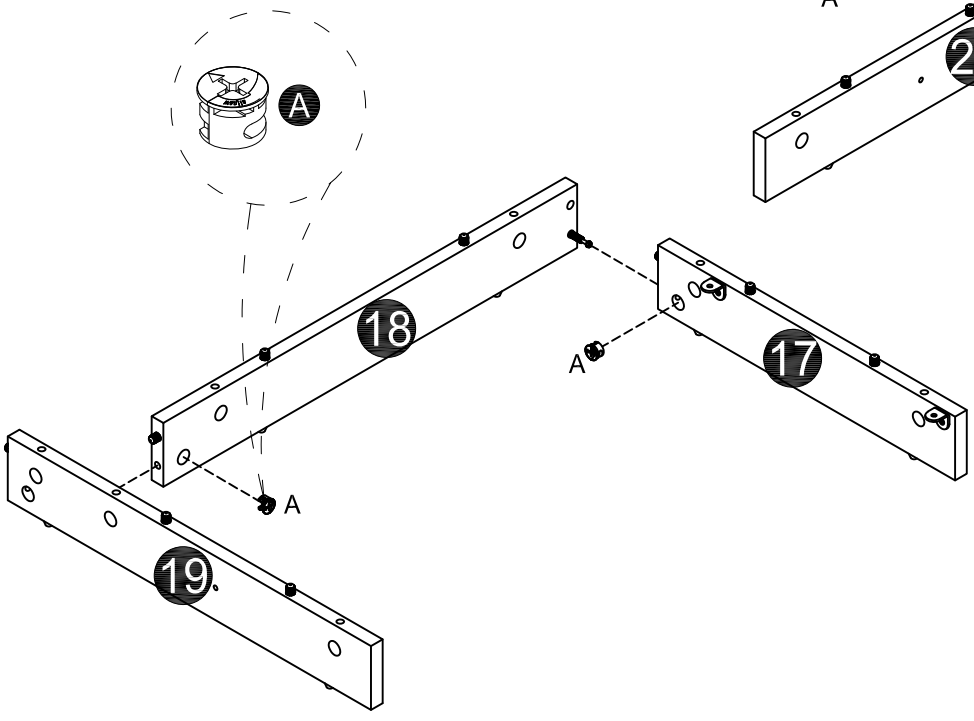

18

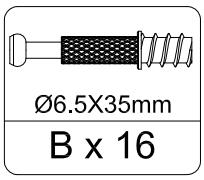

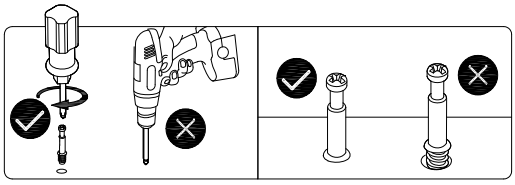

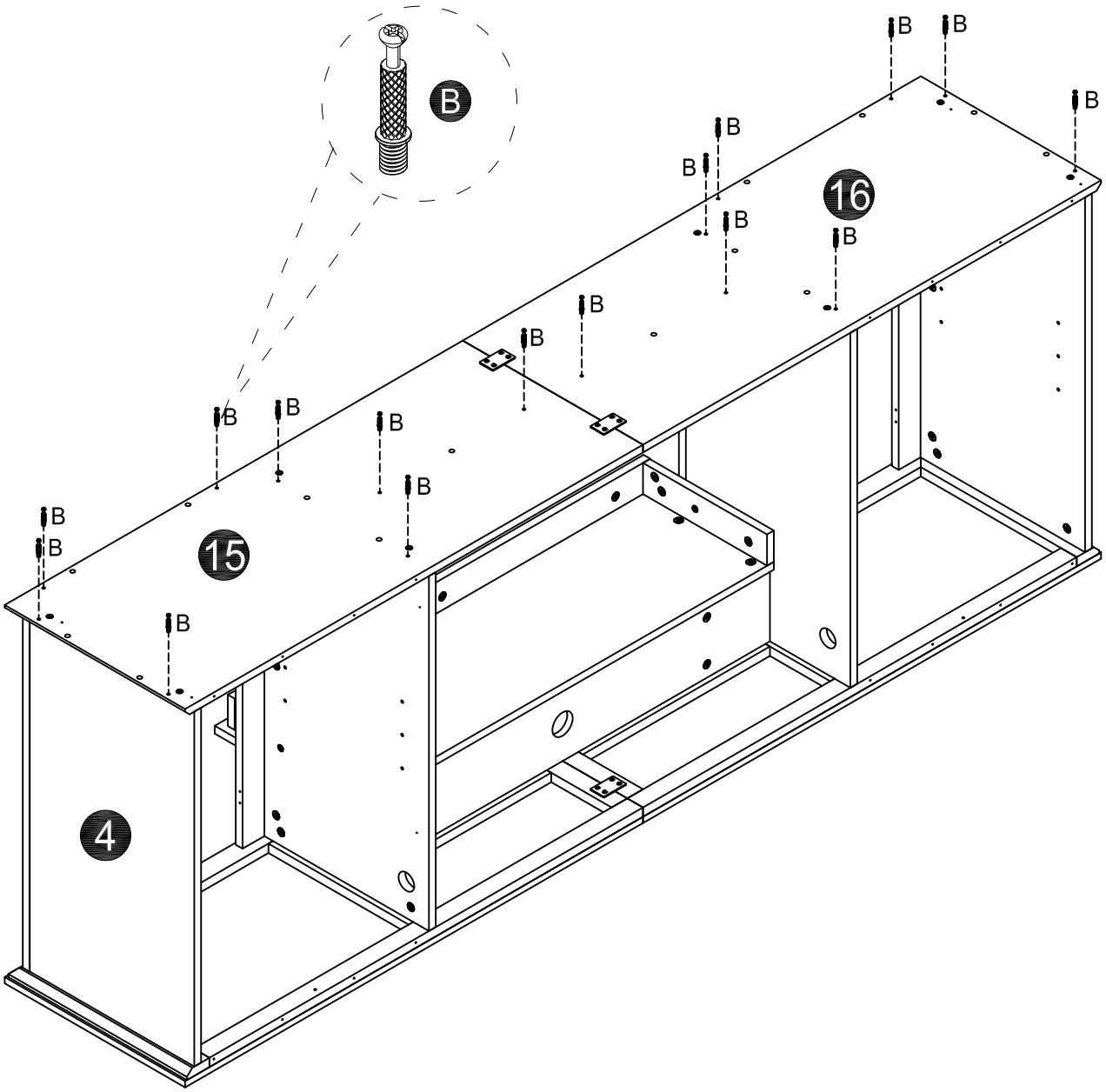

19

Ø15X11mm	Ø3.5X14mm
A x 12	E x 4

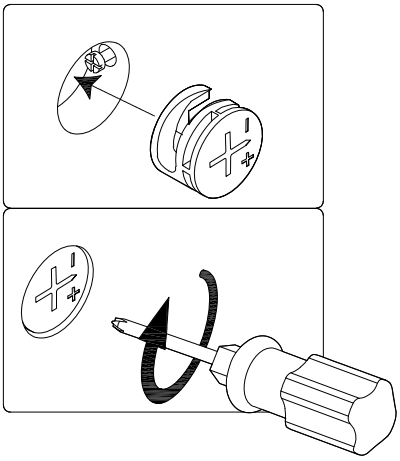

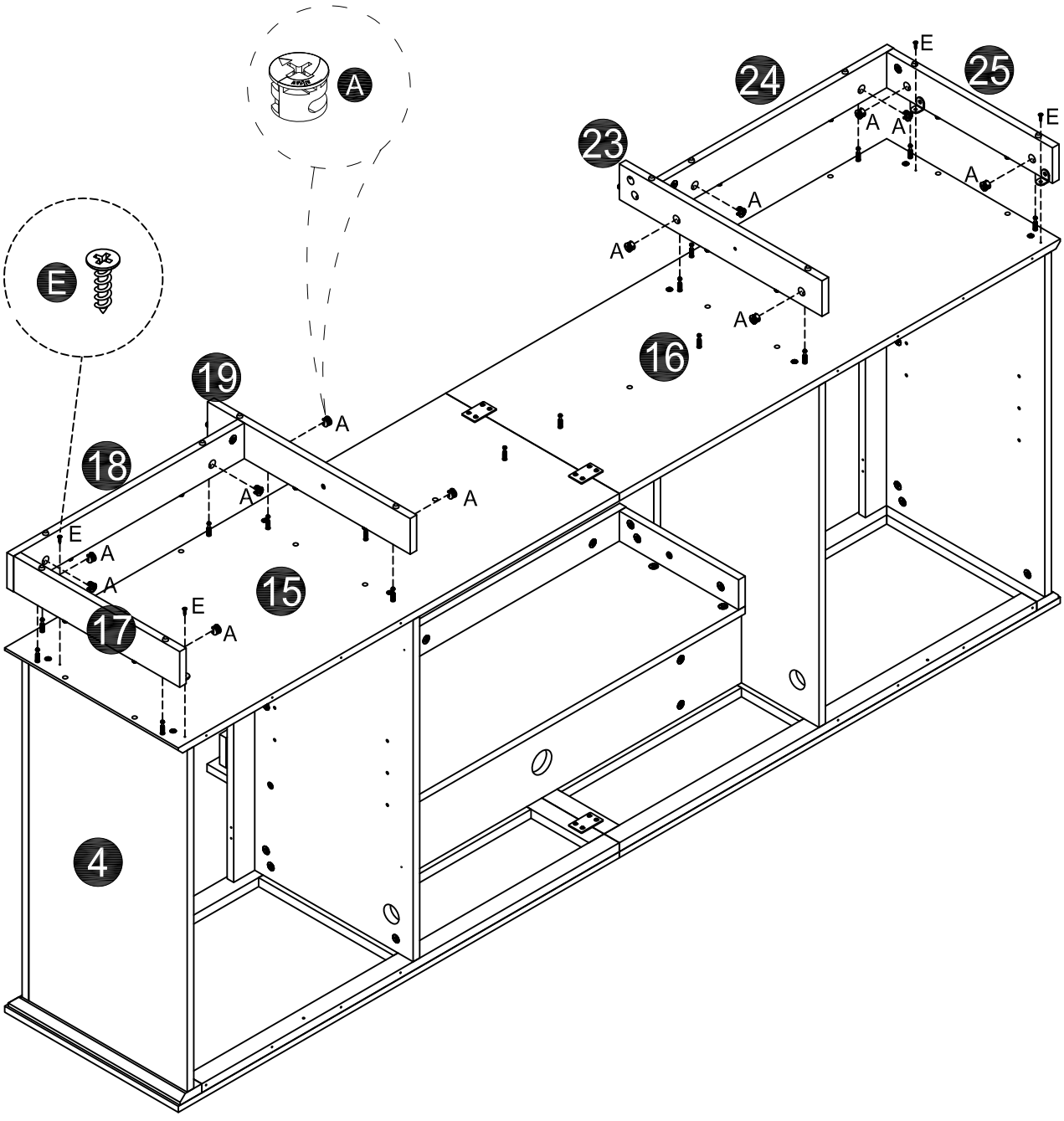

20

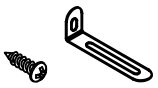		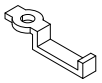	 M3X10mm
S x 2	Qty x 2	Qty x 4	Qty x 4

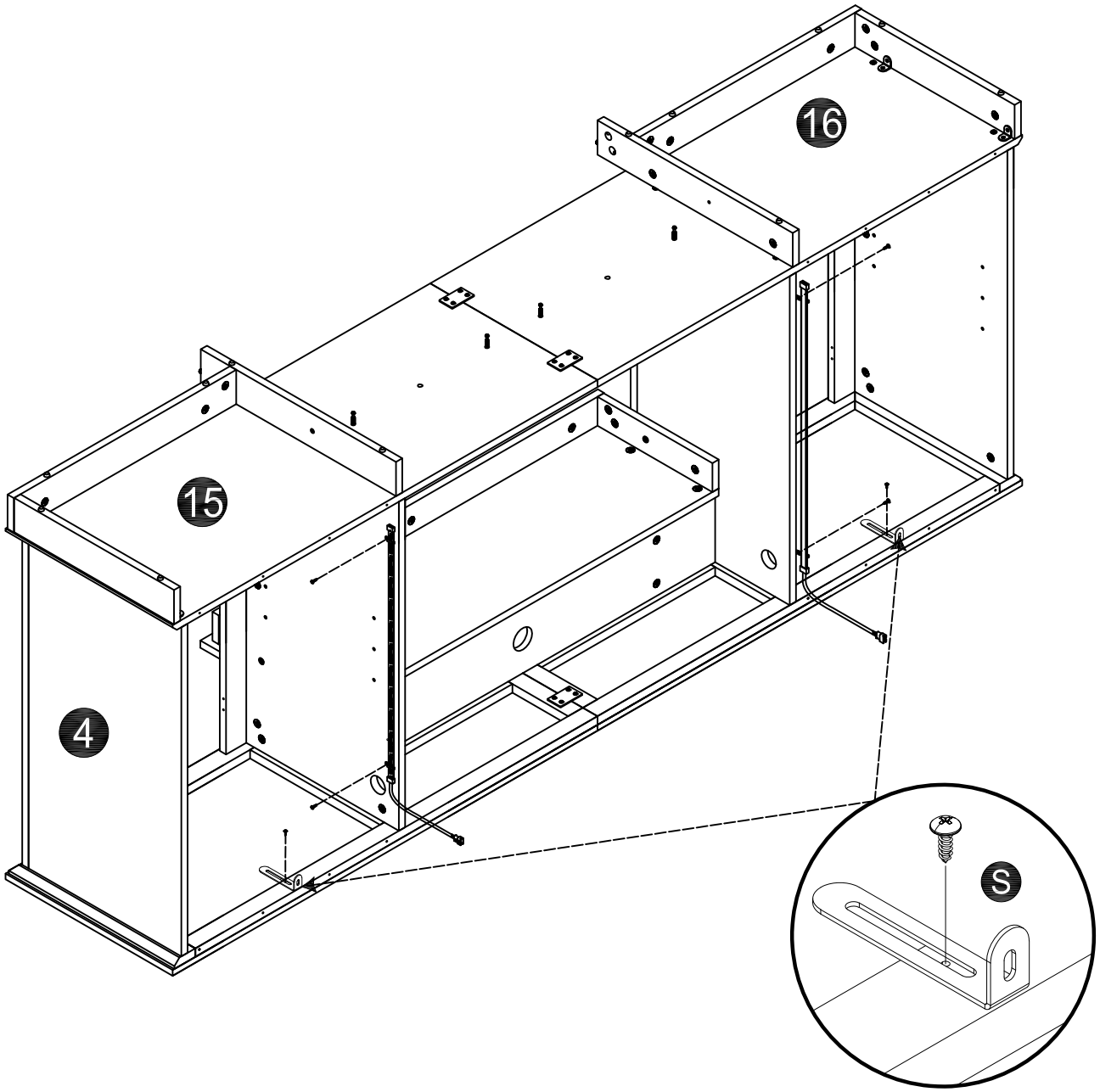

21

Ø15X11mm	Ø3X14mm
A x 2	F x 32

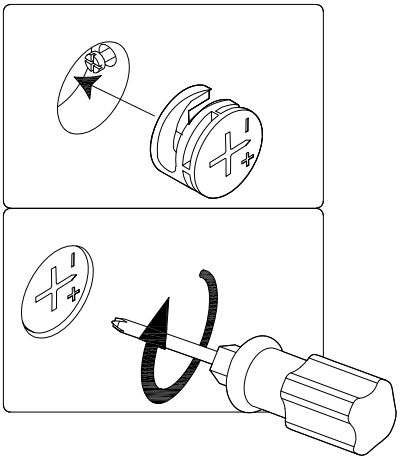

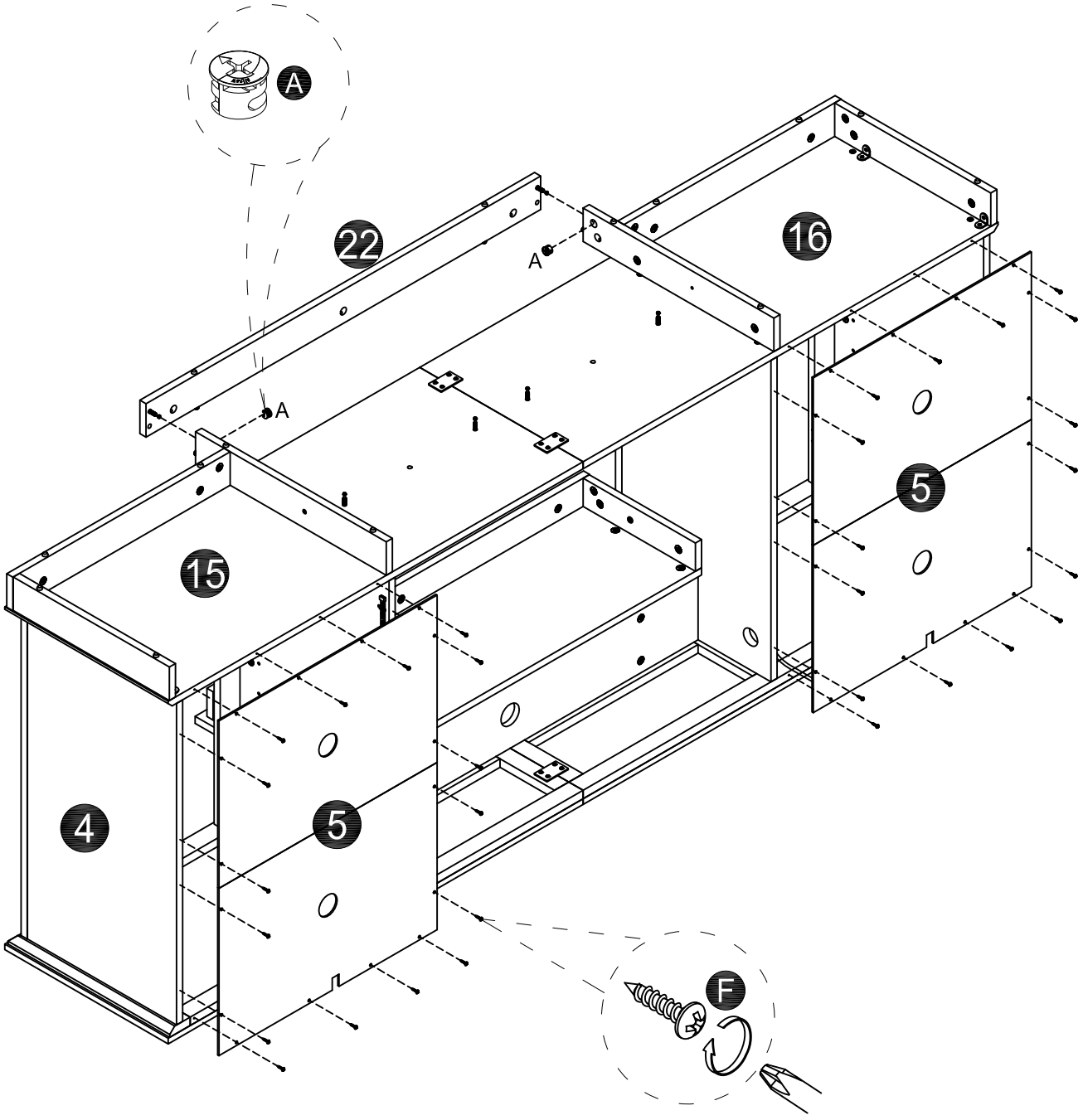

22

Ø15X11mm	Ø4X40mm
A x 9	I x 2

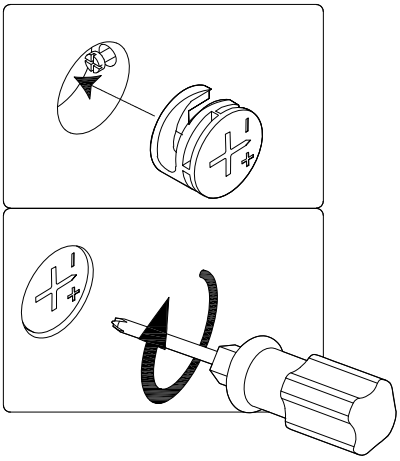

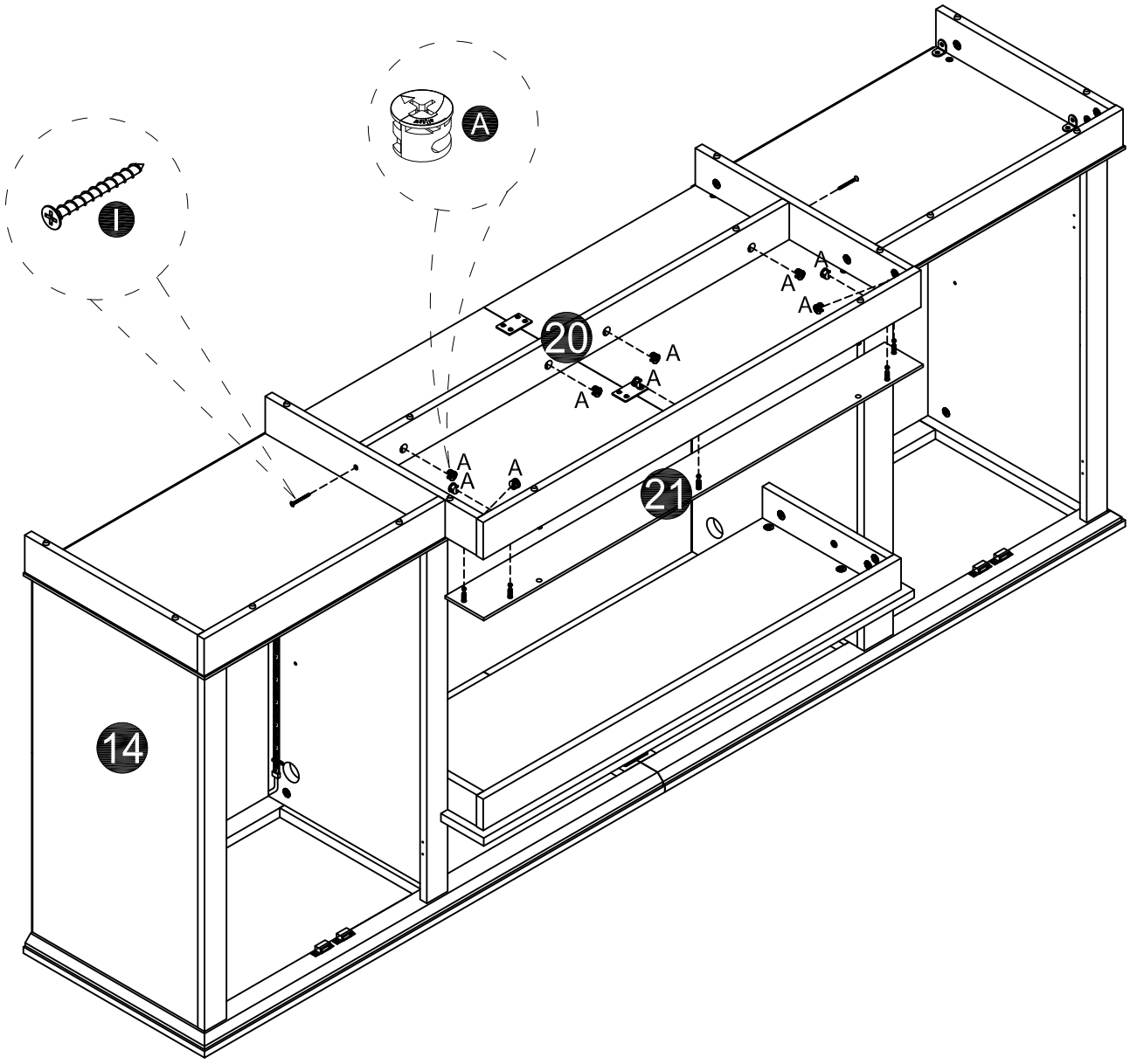

23

Ø4X12mm	
Qty x 4	Qty x 2

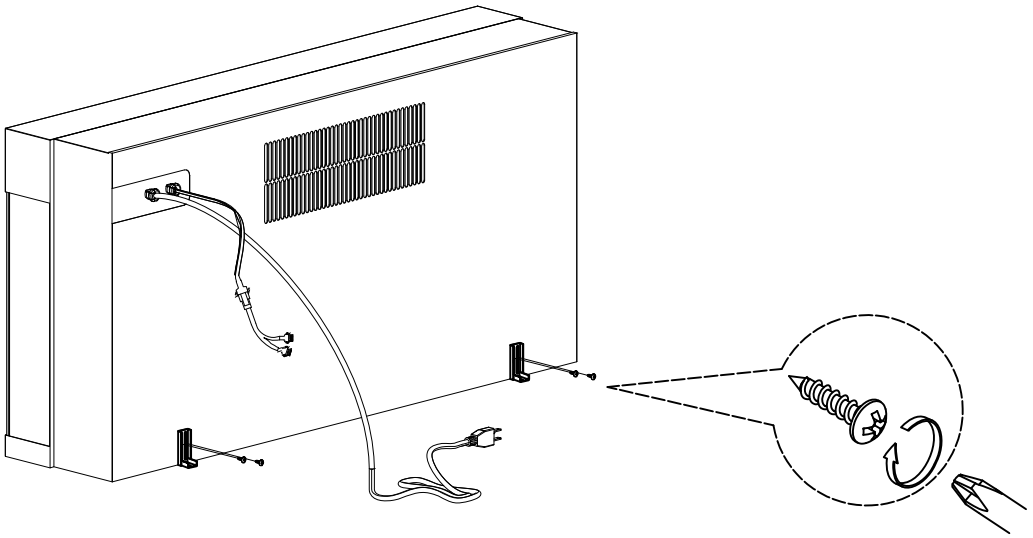

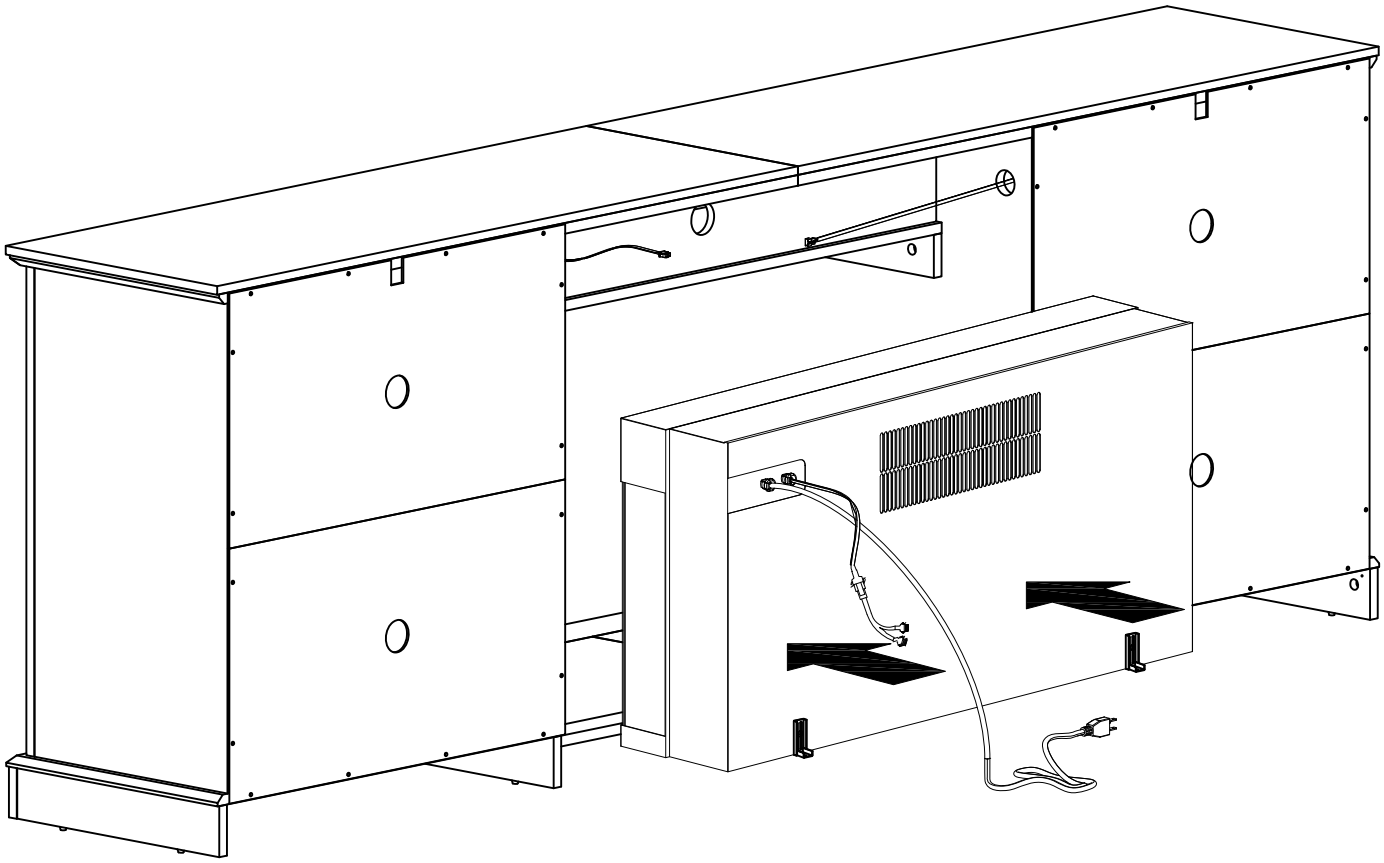

24



Ø4X12mm

Qty x 2

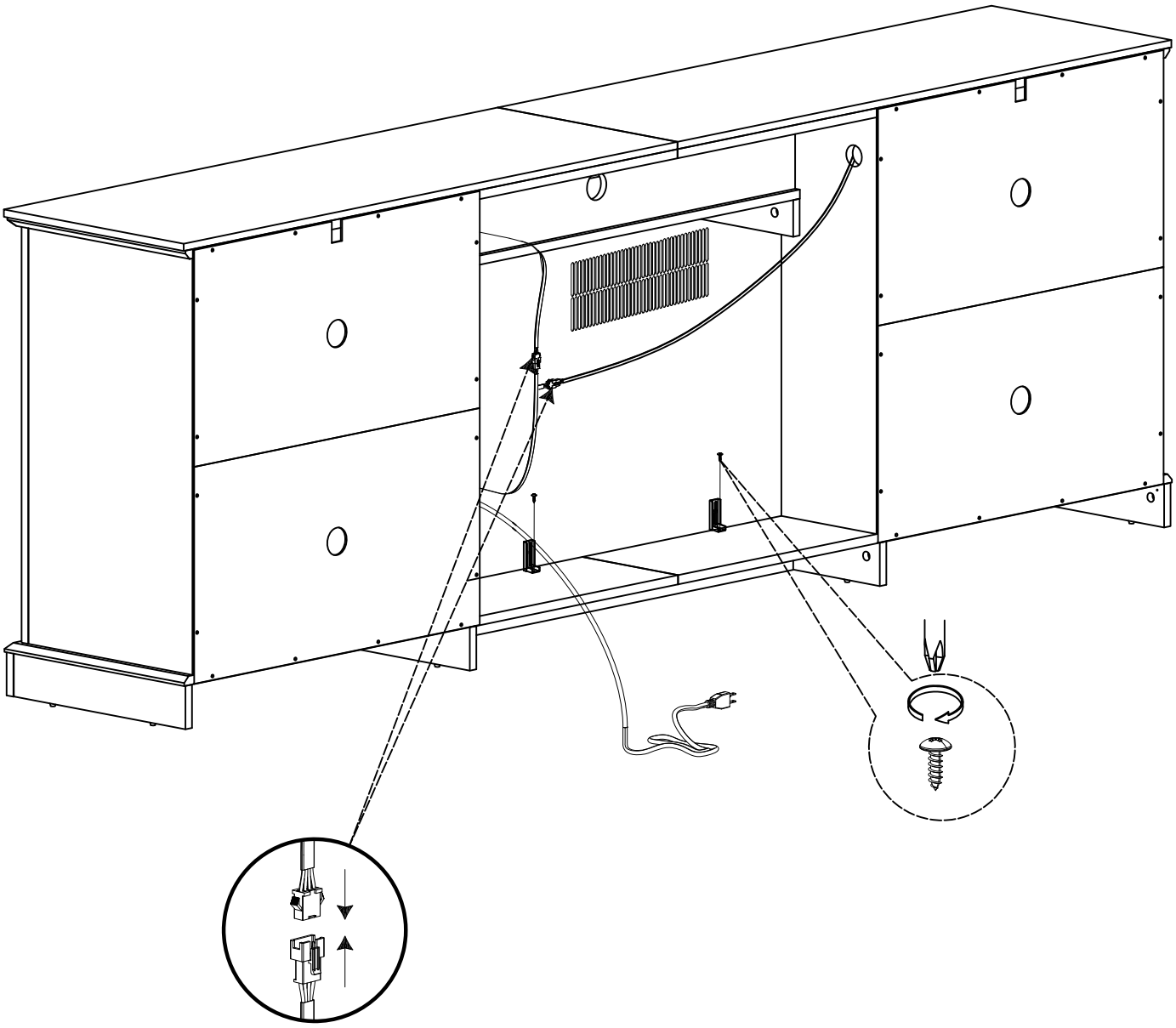

25

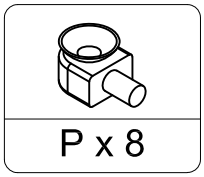

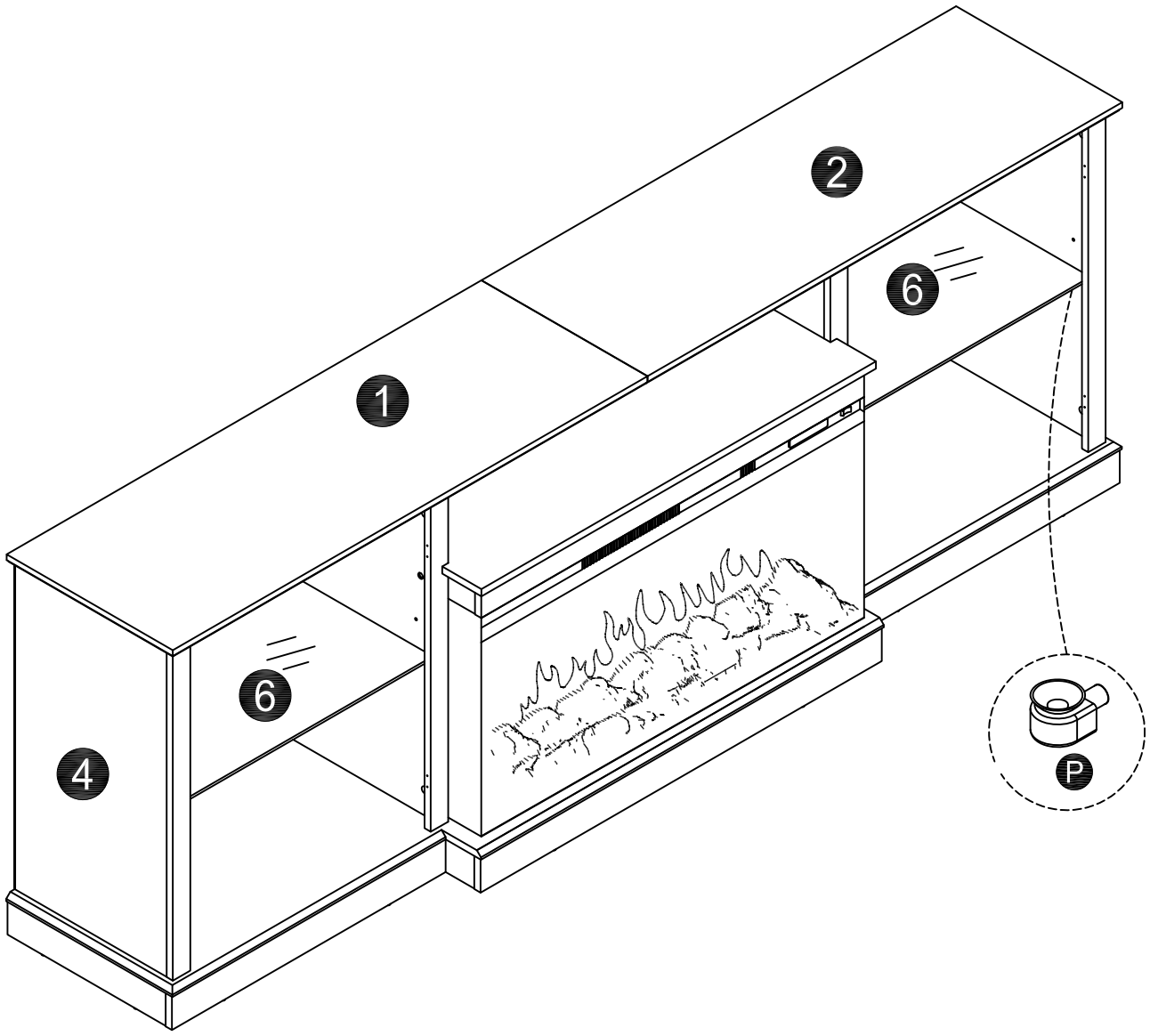

26

Ø3.5X14mm	Ø4X19mm			
E x 28	H x 8	K x 4	M x 4	N x 8

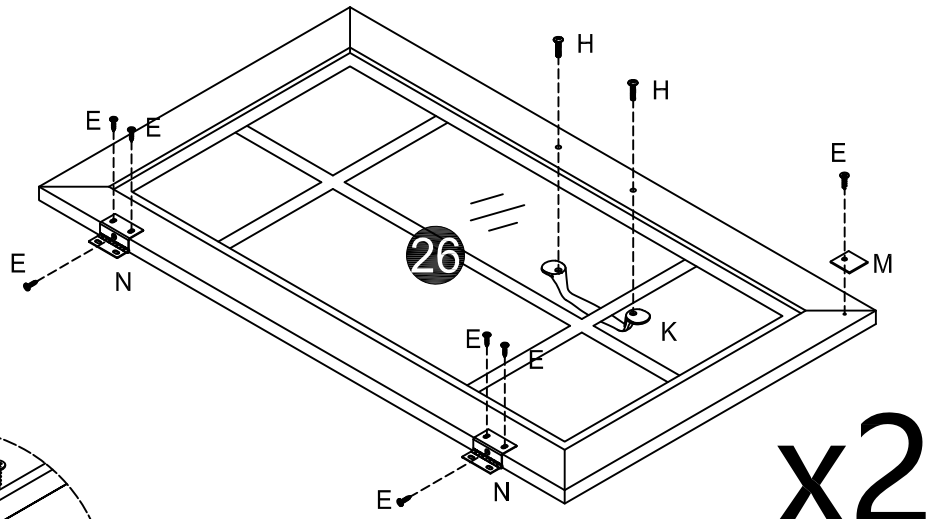

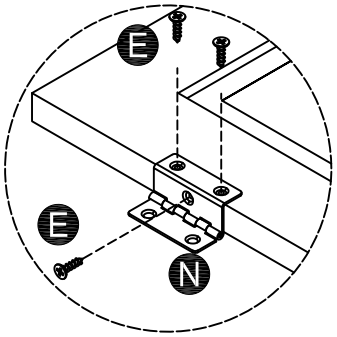

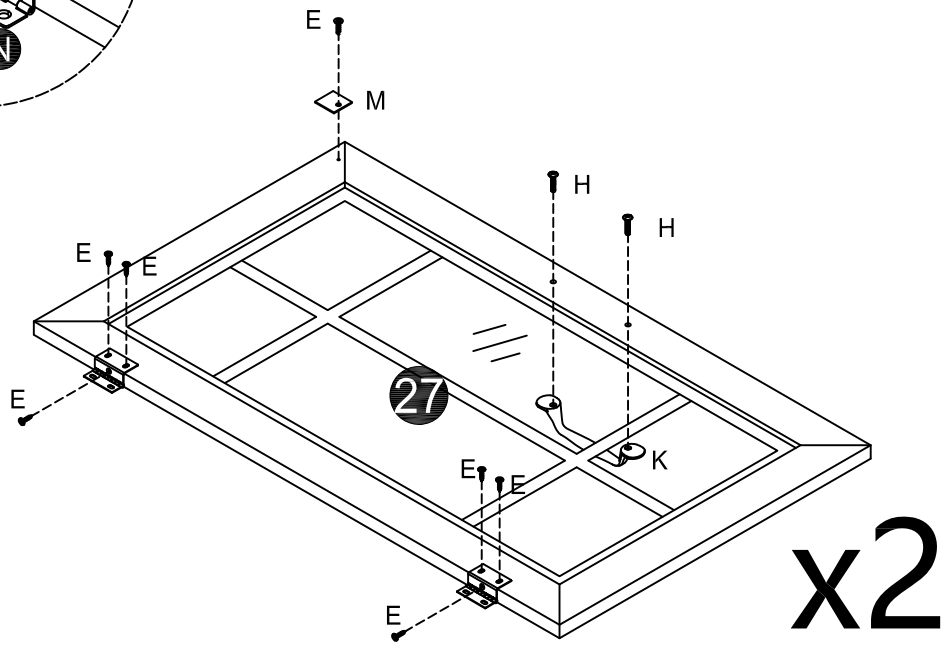

27

Ø3.5X14mm	
E x 16	S x 2

⚠ Warning: If you overturn the furniture, it may cause serious or fatal crushing injuries. We have a wall connection device attached, please use it to hold the furniture following these instructions.

1. **Mark the corresponding hole positions where you want to place the furniture;**
2. **Use a impact drill to drill holes and pay attention to avoid wires and water pipes;**
3. **Knock the expansion pipes into the wall holes;**
4. **Place the furniture in the corresponding position and tighten the wall connection device with screws.**

