E-Commerce by Enitial Lab

ASSEMBLY INSTRUCTIONS

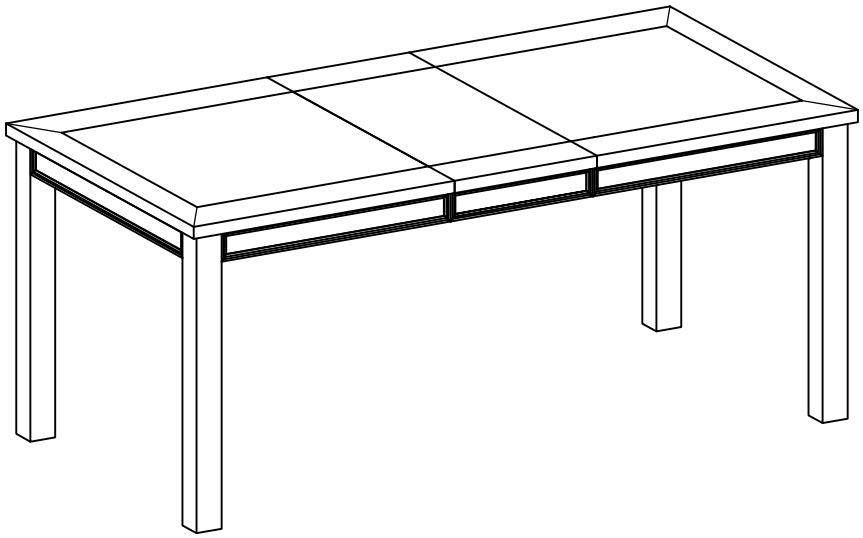

TOOLS REQUIRED



Allen Wrench

(Included)



2 - People Recommended

ASSEMBLY RATING

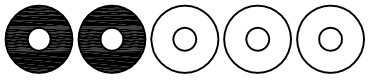

The Assembly Rating is a 5-point system showing the level of effort needed to assemble a specific product.

VERSION # 20-12-18

Thank you for your purchase!

We hope you enjoy this new addition to your home for many years to come.

CHECK BEFORE STARTING

- [ ] **Are you missing anything?**

  Double-check all parts, hardware and accessories listed on Page 6 are accounted for.

- [ ] **Should we send any replacements?**

  Are there any irregularities or flaws in the parts? We can send replacements!

- [ ] **Check out our Quick Tips!**

  We recommend reviewing the pre-assembly handouts. Even experts need a refresher now and then!

- [ ] **Prep Time!**

  Please review the assembly instructions and all diagrams prior to assembling. Set up your work-space by laying the parts and hardware out sepa-rately, then begin!

PRE ASSEMBLY INTRODUCTION

We understand building ready-to-assemble furniture can be a challenging experience for some. To help avoid confusion, we have provided some helpful tips that may speed up the process.



Teamwork

ALWAYS have at least two people to help with transporting and assembling the product to avoid potential injury and/or damage.

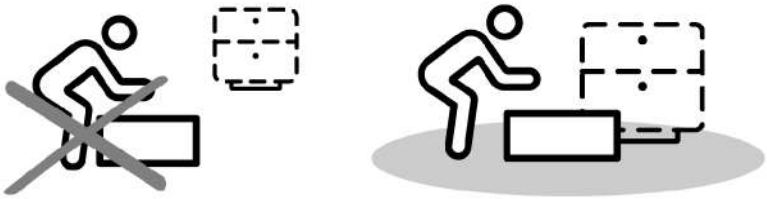

Suitable Location

Assembling near the area of the intended location is highly recommended.



Sufficient Space

Make sure you have enough space to move around during the assembly.



Avoid Scratches

Use cardboard, blankets or a carpeted area while assembling furniture to prevent scratches.

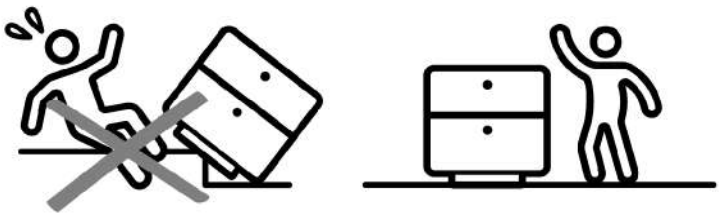

Flat Surface

Make sure the furniture rests on a flat and level surface with each leg evenly touching the floor.

ASSEMBLY AND CARE ADVICE

FAILURE TO FOLLOW THE GUIDELINES BELOW MAY RESULT IN INJURY AND/OR PROPERTY DAMAGE.



Position each part correctly and insert screws or bolts into their respective holes.

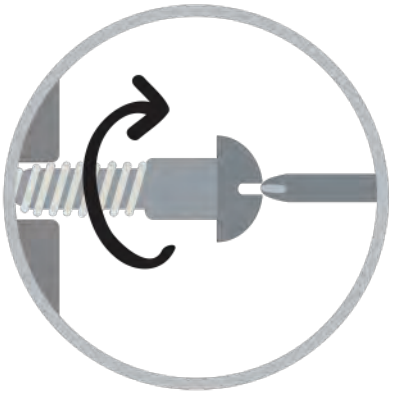

Turn clockwise to tighten and only tighten when step is completed or when instructed to do so.



Use the appropriate hand tools or power tools for assembly. Select steps, such as tightening screws and/or bolts, may require hand tools to avoid causing damage during assembly.



Save the instructions and store any supplied tools for later maintenance.



After two weeks, check and tighten any loose hardware and repeat again every six months thereafter.

IT IS THE USER'S RESPONSIBILITY TO MAINTAIN THE FURNITURE. THE HARDWARE MAY LOOSEN OVER TIME AND MAY CAUSE THE FURNITURE TO BE WOBBLY AND UNABLE TO SUPPORT ITS INTENDED WEIGHT CAPACITY. THIS MAY LEAD TO COLLAPSE AND MAY CAUSE SERIOUS INJURY.

TABLE

CM3324T-84-VN

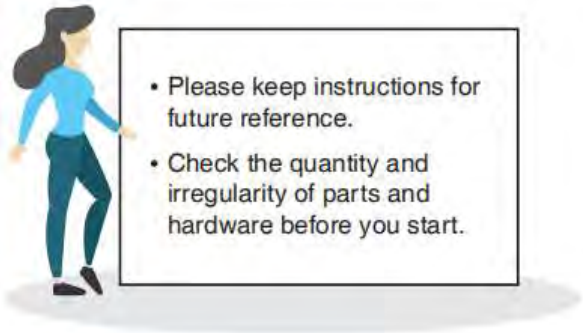

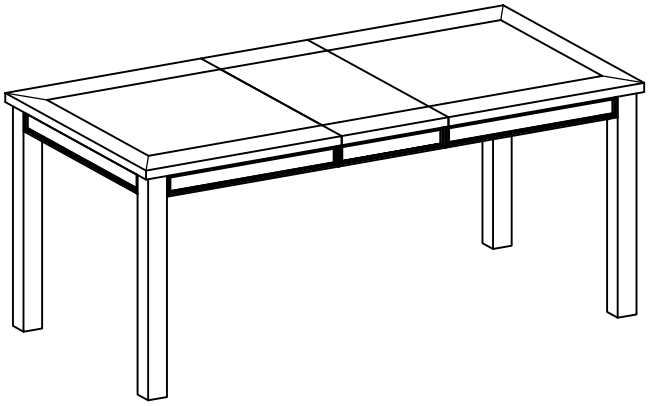

PARTS

#1 1pc

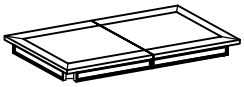

Table Top

#2 4pcs

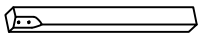

Leg

#3 1pc

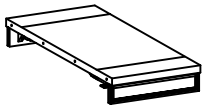

Leaf

HARDWARE

#A 8pcs

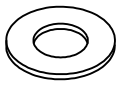

Flat Washer

#B 8pcs



Lock Washer

#C 8pcs

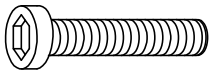

Bolt 5/16"X2-1/2"

#D 1pc

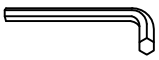

Allen Wrench

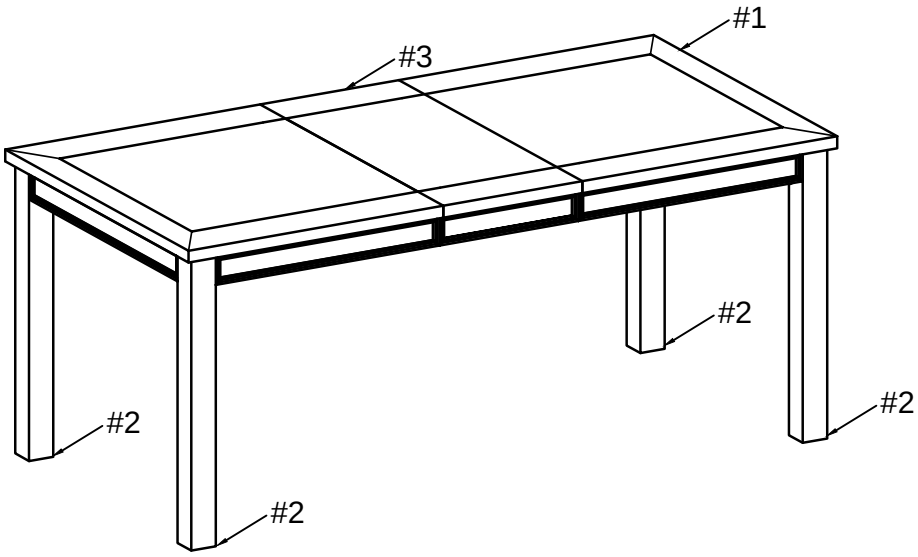

ASSEMBLY INSTRUCTIONS

1

Part #1 x1pc
Part #2 x4pcs
Hardware #A x8pcs
Hardware #B x8pcs
Hardware #C x8pcs

Unscrew the wooden blocks on the corners of the table top.

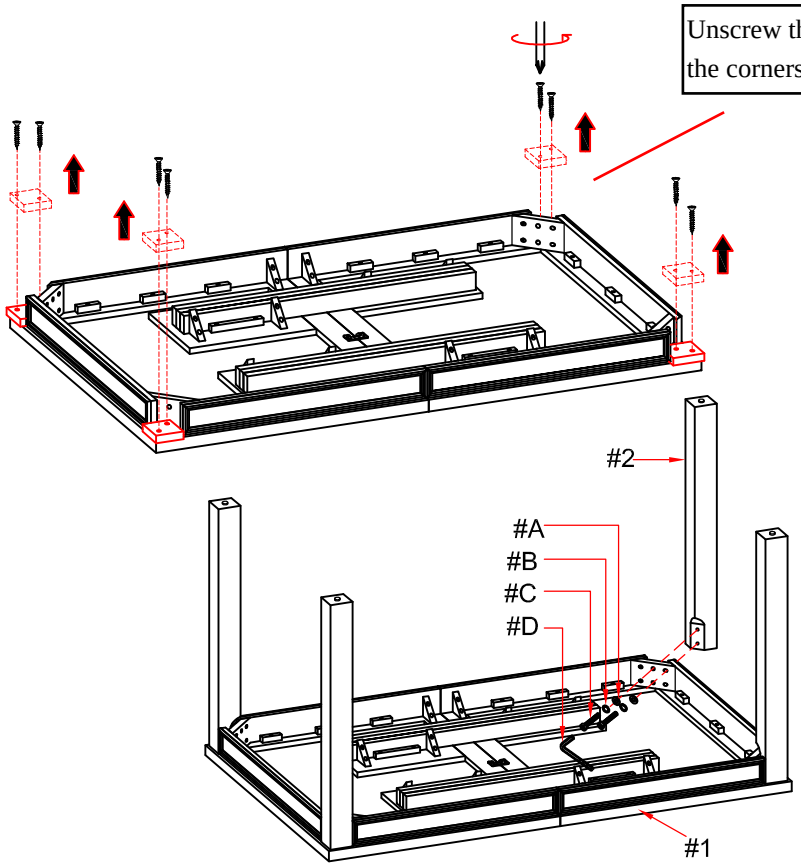

Prepare 8 bolts assembly by inserting lock washer (#B), then flat washer (#A) onto bolts (#C). Align legs (#2) to the holes of the table top (#1). Secure with bolts (#C).

2

Flip the switch underneath the table to unlock and extend the table.

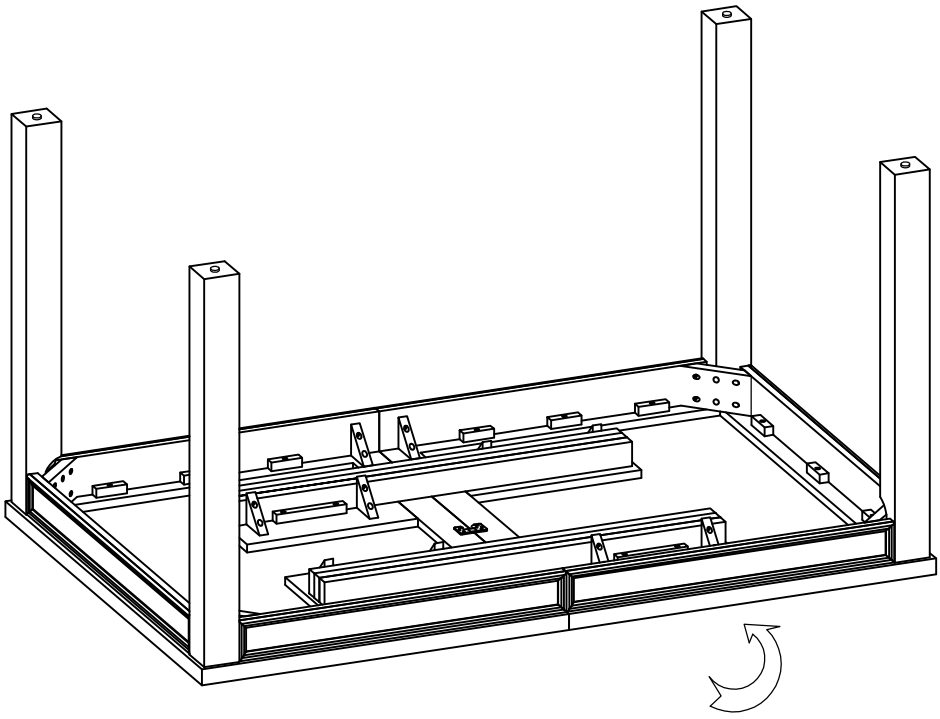

ASSEMBLY INSTRUCTIONS

3

Extend the table.

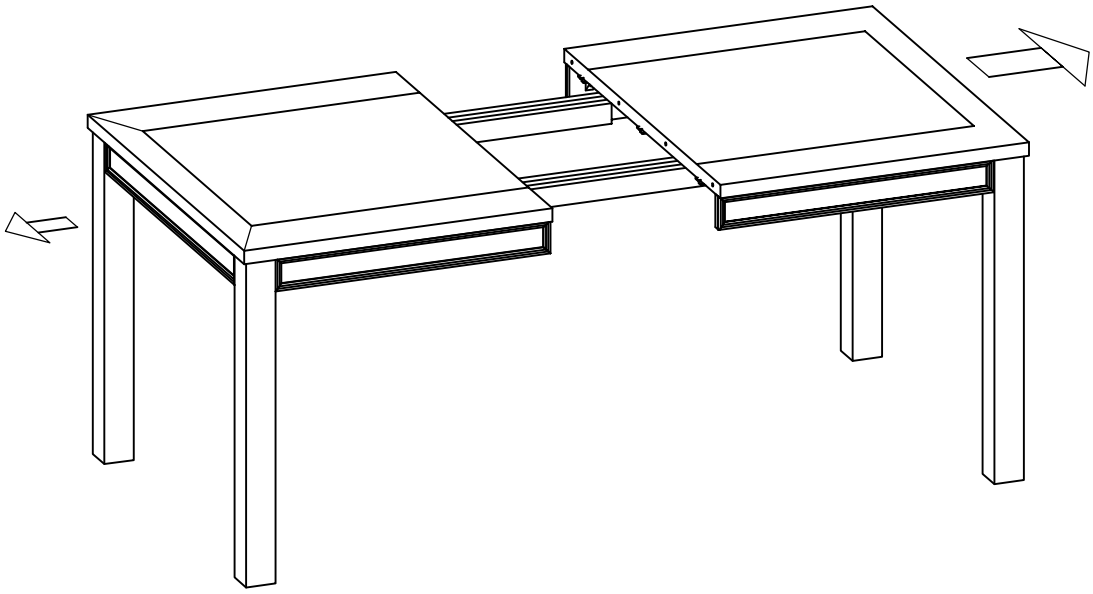

4

Part #3 x1pc

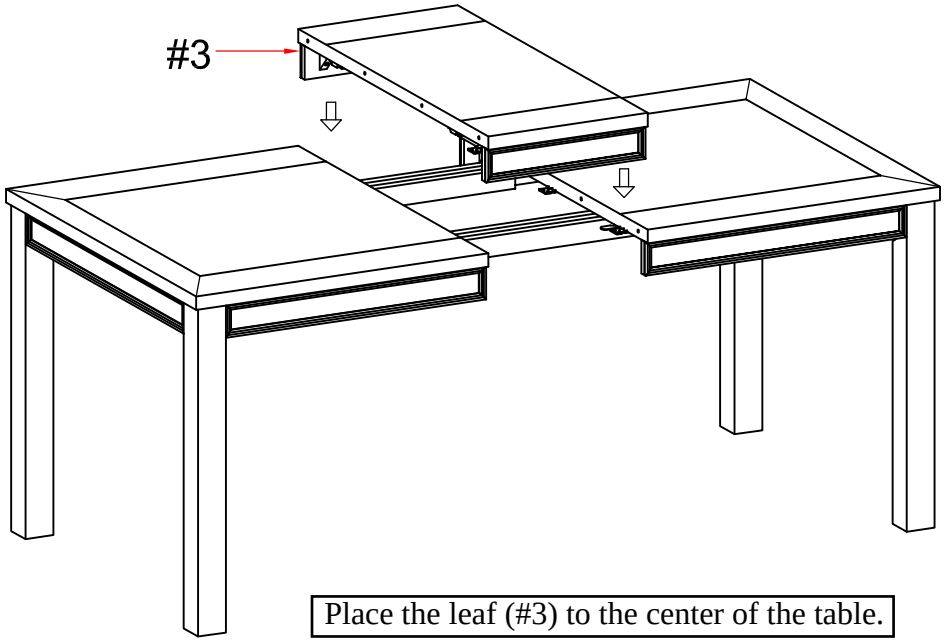

Place the leaf (#3) to the center of the table.

ASSEMBLY INSTRUCTIONS

Move the table inwards for a tight fit, then flip the switch to secure the table leaf.

5

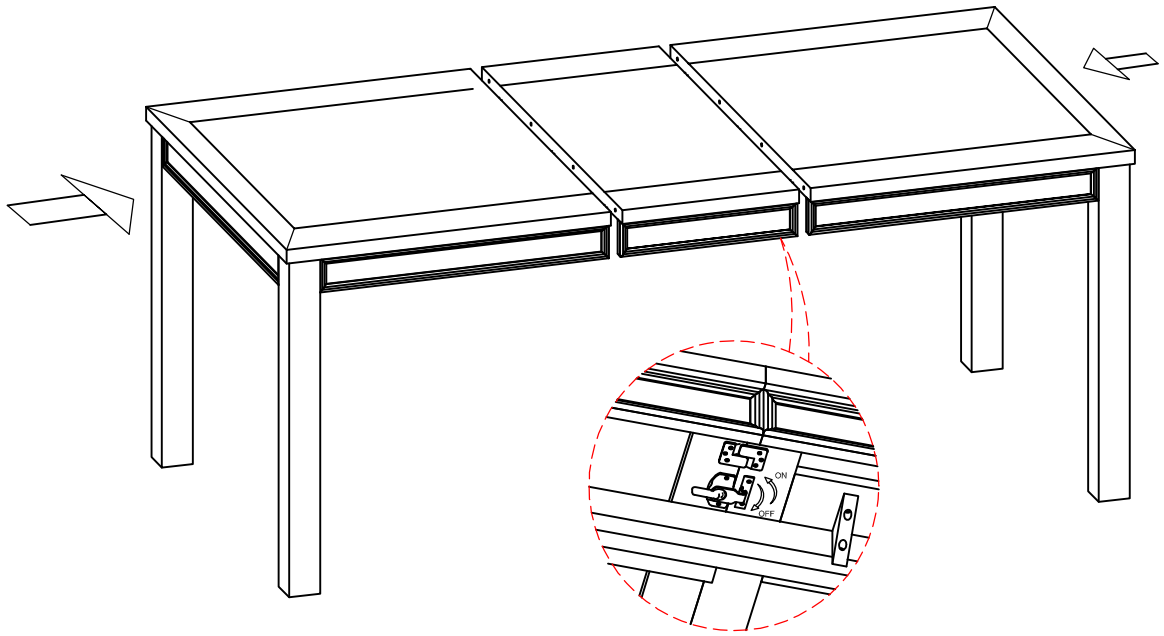

6

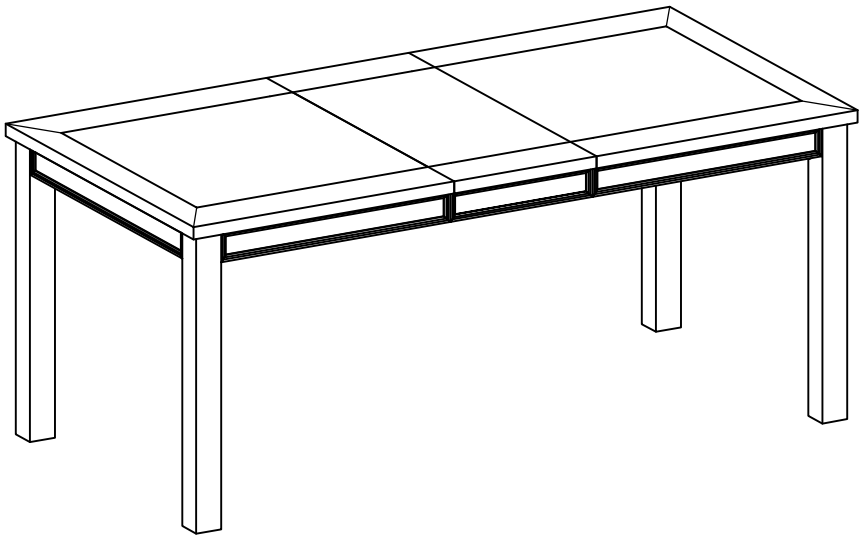

ASSEMBLY COMPLETED

Please ensure the furniture rests on an even and flat surface. If the product wobbles or feels loose, double-check all bolts and/or screws are properly tightened and secured.

Keep this handy!

Please retain this instruction manual and any order-related information for future reference.

Lift, don't drag!

To avoid damage to product please always LIFT the product when transporting of adjusting the placement.