ASSEMBLY INSTRUCTIONS

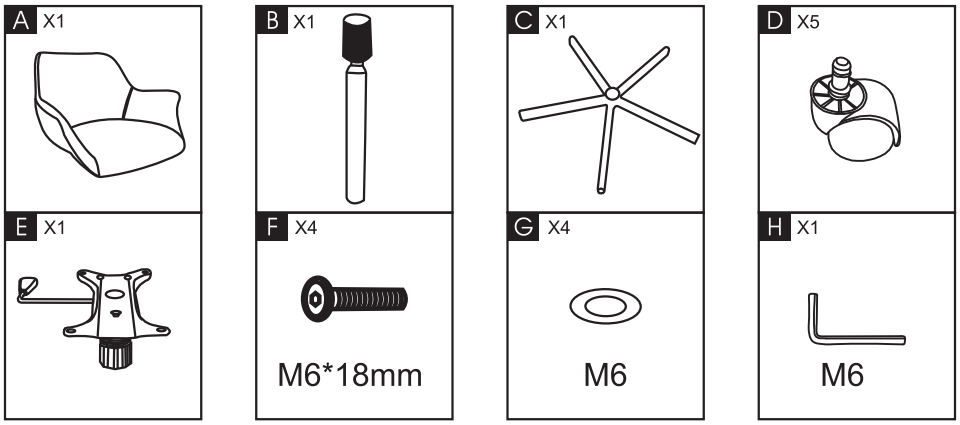

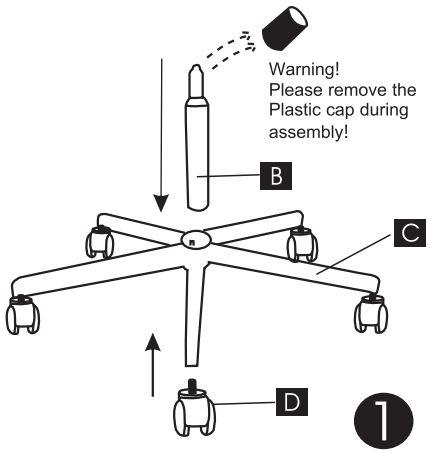

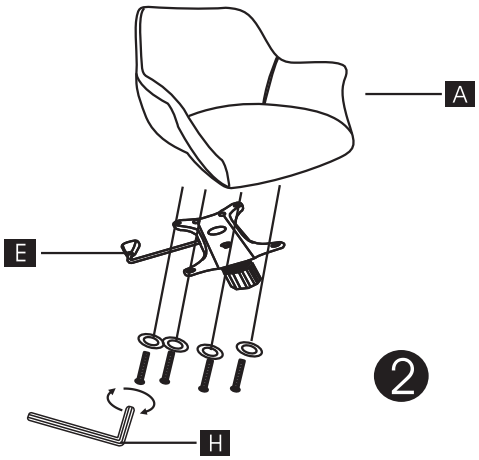

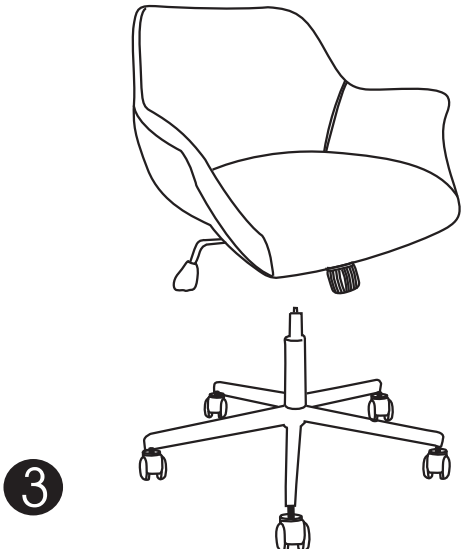

CAUTION:
PLEASE MAKE SURE THAT ALL PARTS ABOVE ARE FIXED TIGHT AND FIRM BEFORE USE.
THIS PRODUCT IS DESIGNED AS A SEAT FOR INDOOR USE ONLY.
DO NOT STAND ON THIS PRODUCT IN ANY CIRCUMSTANCE