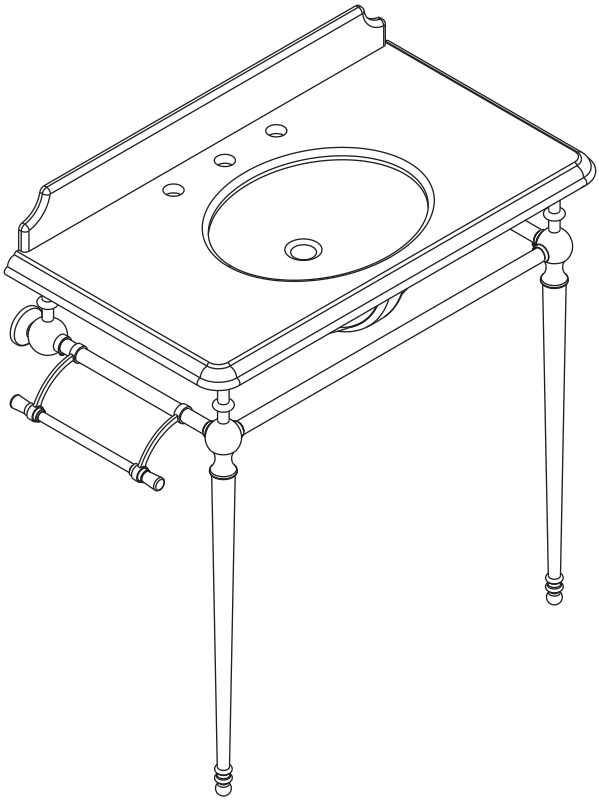

Your order will be shipped in multiple packages, and delivery times may vary.
We appreciate your patience and understanding.

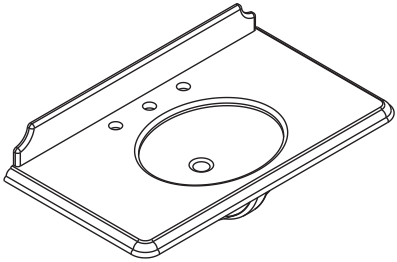

Item no.	Reference Image	Qty
A	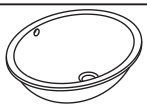	x1
B	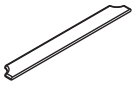	x1
C	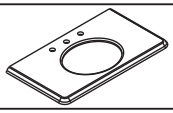	x1

Item no.	Reference Image	Qty
D		x4
E	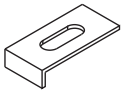	x4
F		x4

step:1

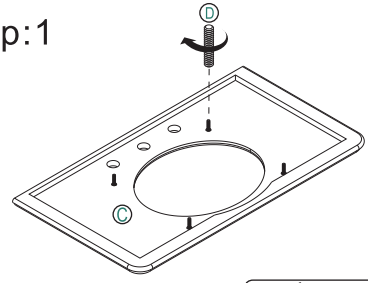

step:2

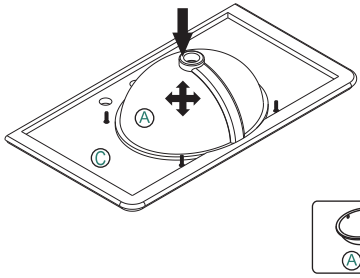

step:3

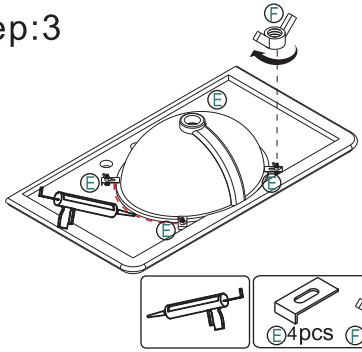

step:4

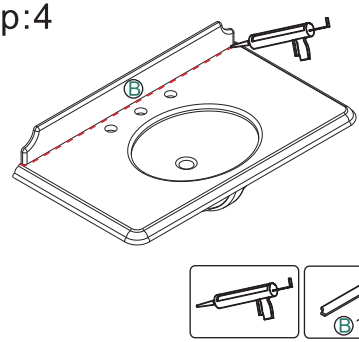

Notice:

1.Follow the installation instructions.Please confirm all accessories are preset before installation.

2. Do not fully tighten the screws during initial assembly. Fully tighten screws only once all pieces which are correctly assembled.

3. If you encounter any problems during installation, please contact our customer service.

4. Please unbox the item from the side with an open-label and put a carpet on the foor to avoid scratching it.



Recommended installers : 2

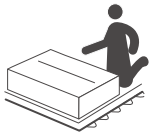

Put a carpet on the floor before unpacking

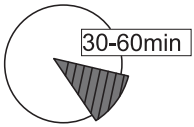

Estimate installation time: 30 minutes

Item no.	Reference Image	Qty
1	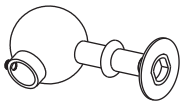	x2
2	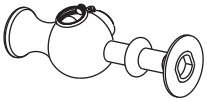	x2
3		x2
4		x2
5	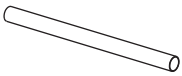	x2
6	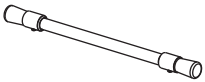	x1
7	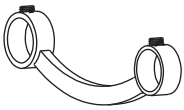	x2

Item no.	Reference Image	Qty
8		x1
9		x2
A	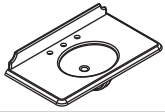	x1
B	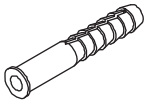	x4
C	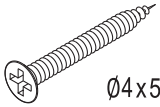	x4
D	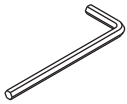	x1

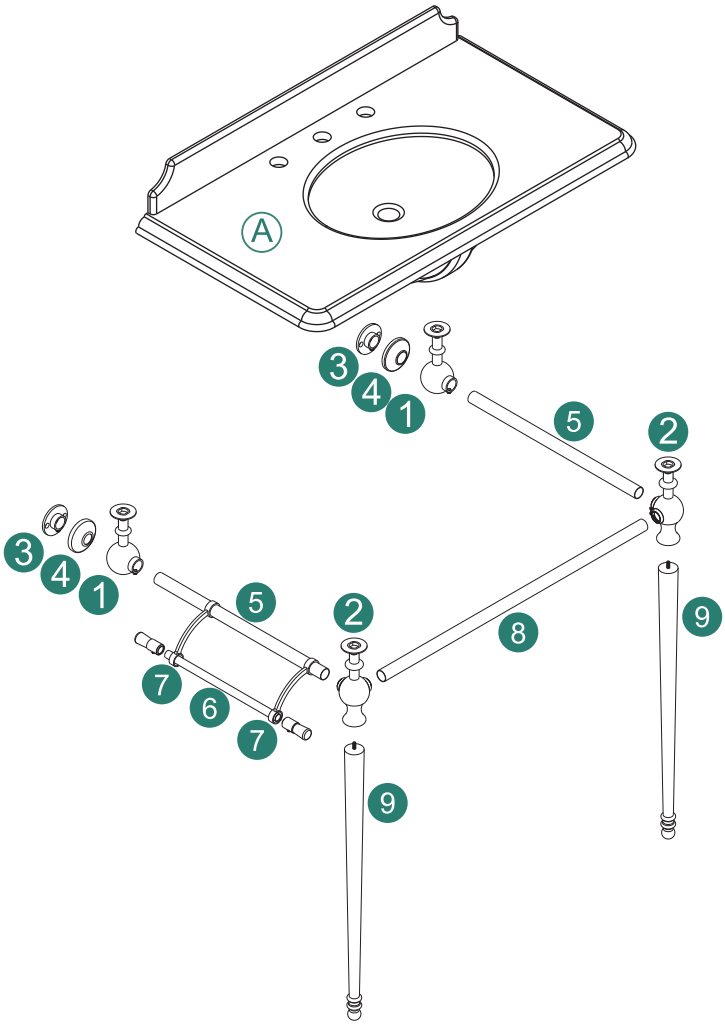
A
3
4
1
5
2
8
9
7
6
7

1

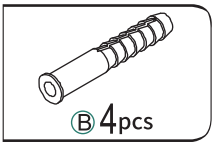

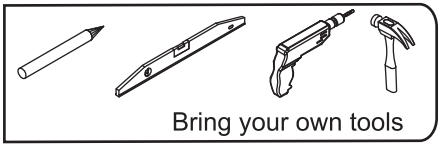

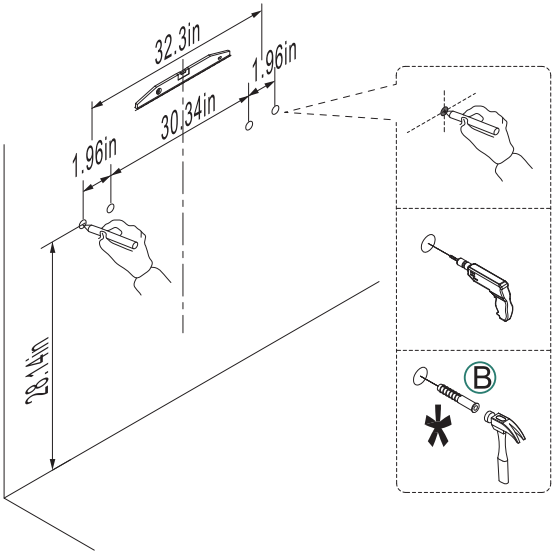

WARNING: To prevent falling down this product must be used with the wall attachment device provided.
WARNING: Assess the suitability of the wall to ensure that the fastening devices will withstand the forces generated.
WARNING: The maximum load-bearing capacity of this furniture is:40-60kg, please do not overload!
Load-bearing capacity primarily depends on the installation method and wall structure.
Always identify the wall type first and hire professional installers using fasteners specifically designed for that wall type.

2

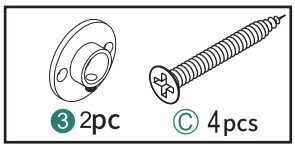

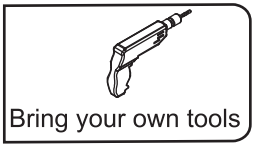

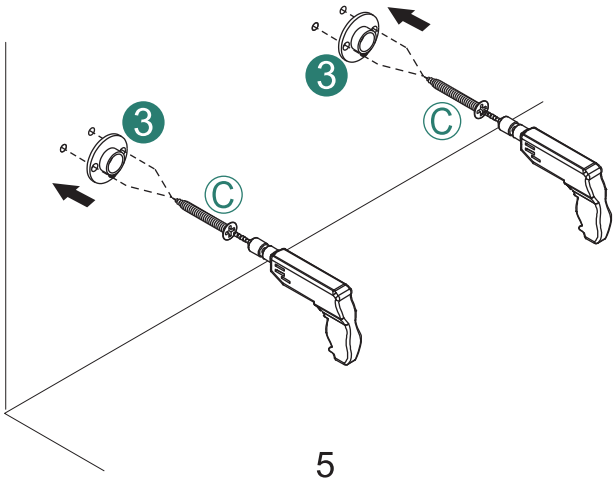

3

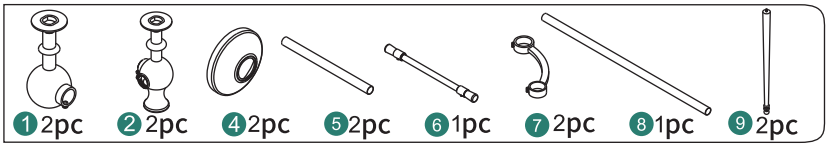

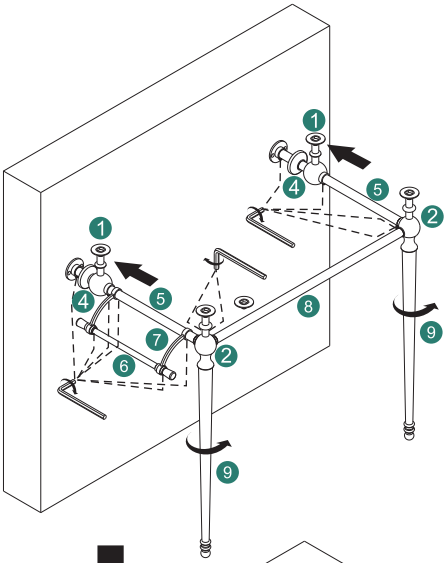

1. Connect the components correctly according to thenumbers and gently tighten the screws but do not lockthem in place.
2. The towel rack can be installed on the rods on the left, right, and front sides. Choose the ideal direction andgently insert it. Pay special attention not to scratch the surface coating of the round tubes during the insertion process!

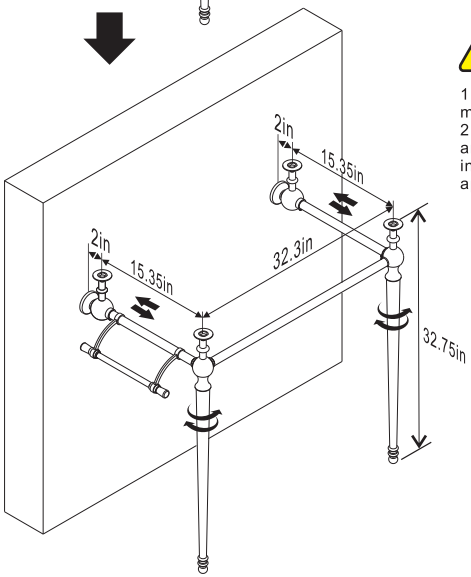

1. After adjusting the position according to the marked dimensions, tighten all the screws.
2. Once the towel rack is fixed, do not move it anymore. Avoid leaving any marks from the installation process that could affect the appearance!

4

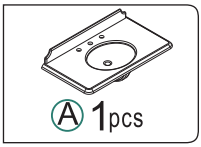

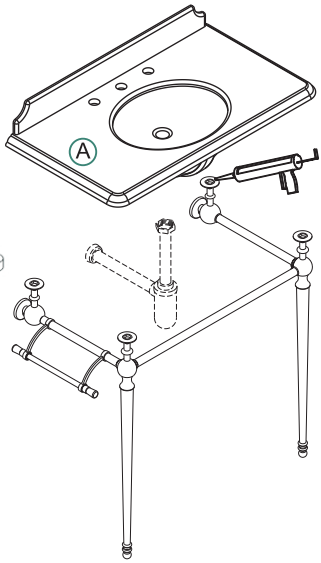

The tops of the four supporting pieces need to be coated with glass glue to better support the washbasin..

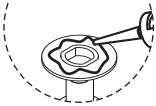

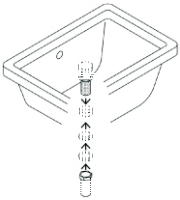

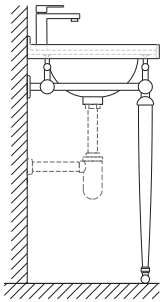

Pop-up Waste

STEP 1
Install Pop-up Waste with over flow.

STEP 2
Connect the drain pipe.

This product does not include faucet and drainage accessories. The content on this page is provided as installation suggestions only. Please carry out the installation according to the requirements of the product you actually purchased.

5

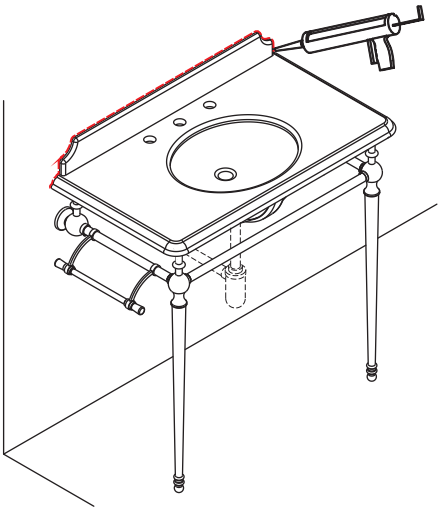

1. The three sides at the back of the basin need to be sealed with glue to enhance stability and improve appearance!
2. Wait until the glass gluehas completely solidified before using it. The time is approximately 12 hours or so!
3. Do not shake the support frame left and right forcefully!

Always fully close the faucet after use!
Failure may cause:

Water Overflow
Continuous flow with blocked drain floods cabinetry, floors, and ceilings below, causing property damage and liability for compensation.

Personal Injury
Water accumulation significantly increases slip/fall risks (especially for children/elderly).

Cabinetry Damage
Water infiltration leads to swelling, warping, hardware corrosion, and countertop cracks.

Hidden Hazards
Persistent leakage erodes wall structures, breeds mold, and incurs high repair costs.

We strongly recommend that you:
- ☑ Confirm faucet is fully closed after each use;
- ☑ Regularly inspect faucet/hoses for leaks;
- ☑ Shut off angle valve immediately and seek repair if malfunction occurs;
- ☑ Cut off main water supply when leaving home long-term.

Disclaimer: Users bear full responsibility for damages caused by faucet left open or delayed repairs.

