CAT TREE ASSEMBLY INSTRUCTION

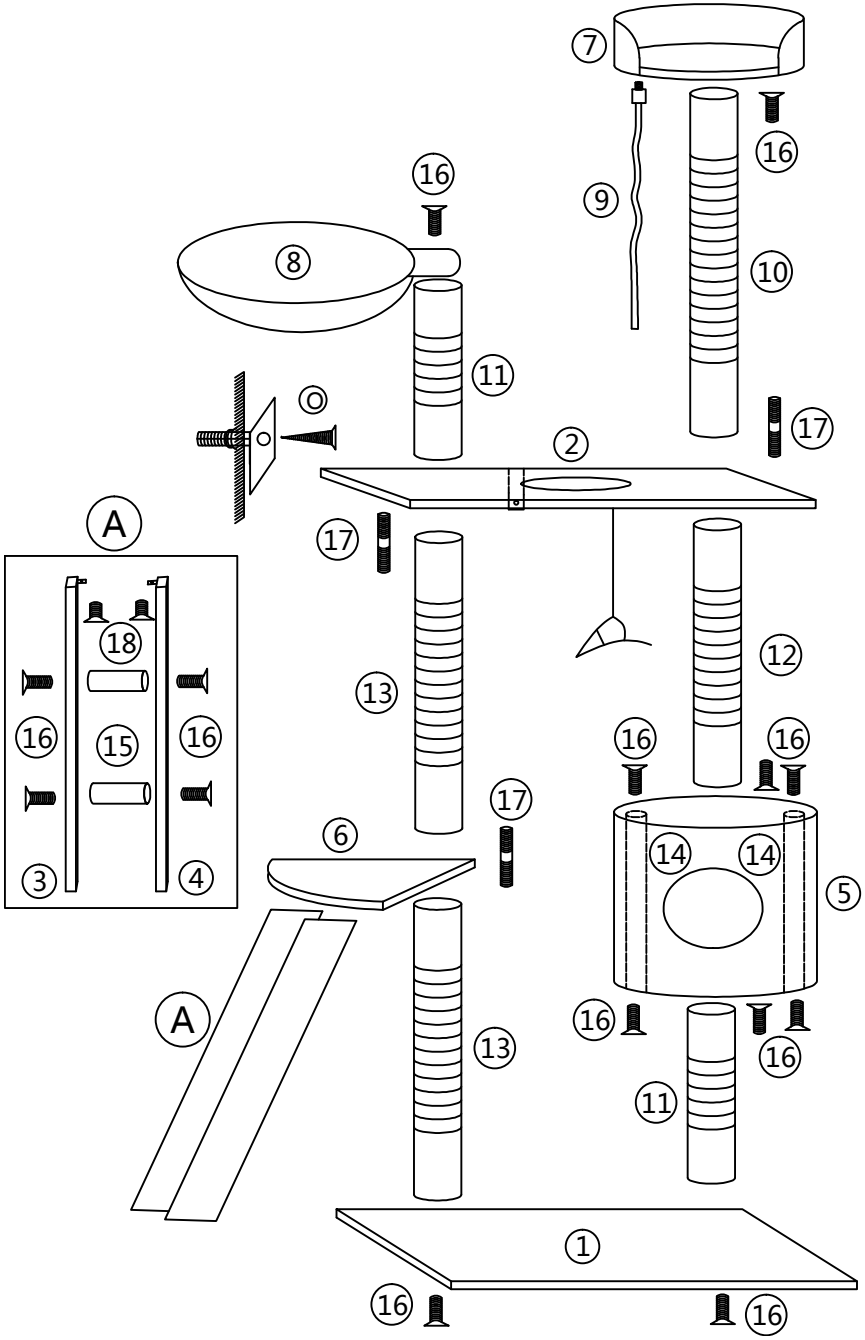

① 60x40cm*1	② 60x28cm*1	③ 50x7cm*1
④ 50x7cm*1	⑤ 30x30x27cm*1	⑥ 30x30cm*1
⑦ 30x30cm*1	⑧ 30x30cm*1	⑨ 35cm*1
⑩ 50cm*1	⑪ 25cm*2	⑫ 38cm*1
⑬ 44.5cm*2	⑭ 24.5cm*2	⑮ 18cm*2
⑯ M8x40*14	⑰ M8x80*3	⑱ M8x20*2
	⑲ M8*1	⊙ ST6x30*1