A-A

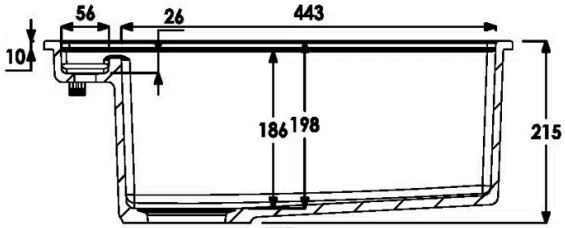
56
26
443
10
186
198
215

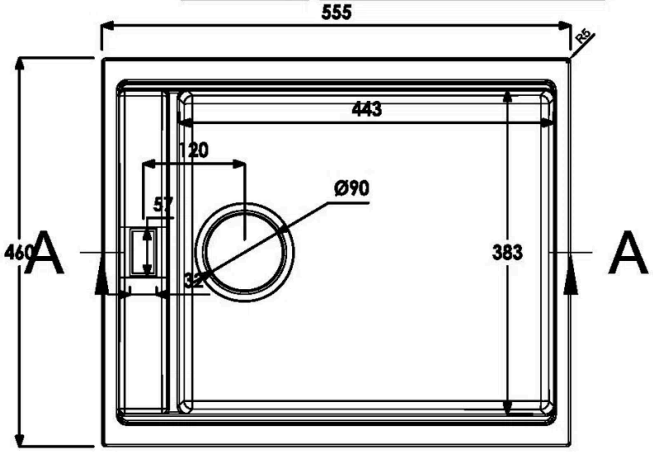
555
R6
443
120
57
Ø90
460
A
32
383
A

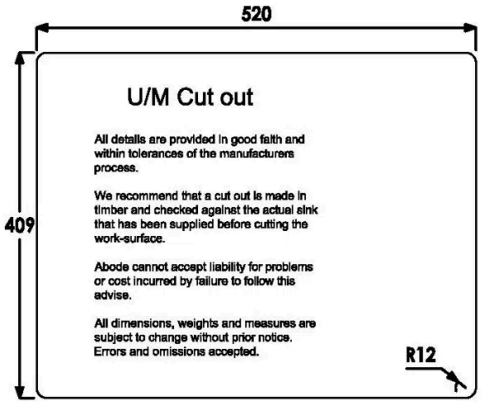
520
U/M Cut out
All details are provided in good faith and within tolerances of the manufacturers process.
We recommend that a cut out is made in timber and checked against the actual sink that has been supplied before cutting the work-surface.
Abode cannot accept liability for problems or cost incurred by failure to follow this advise.
All dimensions, weights and measures are subject to change without prior notice. Errors and omissions accepted.
409
R12

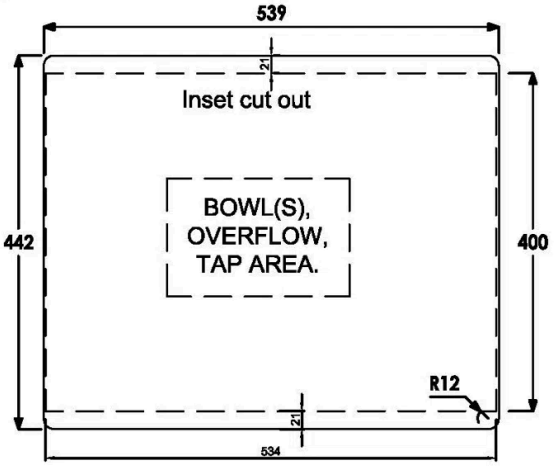
539
21
Inset cut out
BOWL(S),
OVERFLOW,
TAP AREA.
442
400
R12
21
534