2xOTTOMAN

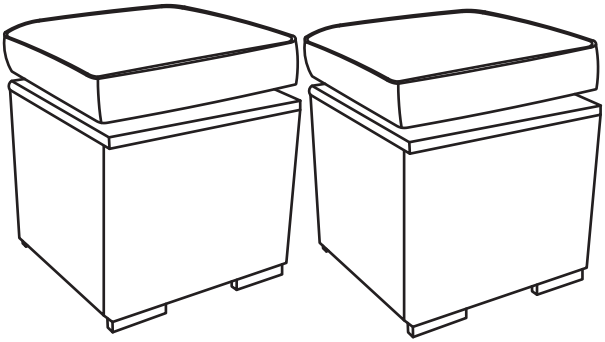



Happy?

Please leave us a review !
You can make others happy too!



IMPORTANT, RETAIN FOR FUTURE REFERENCE: READ CAREFULLY.

Safety

- ☑ For domestic use only.
- ☑ Always use on firm level ground.
- ☑ Don't tighten all the bolts before the product is fully assembled.
- ☑ It would be useful to ask someone to help you assemble the product.
- ☑ Periodic structural checks of this product should be undertaken, do not use if you have any doubts about its fitness for purpose.
- ☑ Do not stand on the seat.
- ☑ Do not let children play with this product.
- ☑ Maximum load per seat: 200 lbs.

At the beginning of the season

- ☑ Check to ensure that all components and fixings of this product are secure, do not use if you have any doubts about its fitness for purpose.

At the end of the season

- ☑ This product should be stored under cover during prolonged spells of adverse weather (wet or cold) and also during the winter (ideally in a garden shed or garage).
- ☑ Always clean and dry thoroughly before storage.

COMPONENT LIST - OTTOMAN X 2

Item no.	Reference Image	Description	Qty.
A	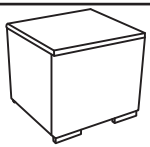	Ottoman	1
B		Cushion	1
X		Adjustable Feet	4

NOTE:
When tightening the Screws, tighten sequentially.
DO NOT tighten any Screws fully and then move on to the next one. This may cause the frame to warp.
If there is still wobbles or screw holes cannot be aligned,loosen the bolts and execute this same process.
If the Ottoman is not stable it could lead to damage to the product.

1 Complete the assembly of adjustable feet (X) as picture. Do this in 4 places.

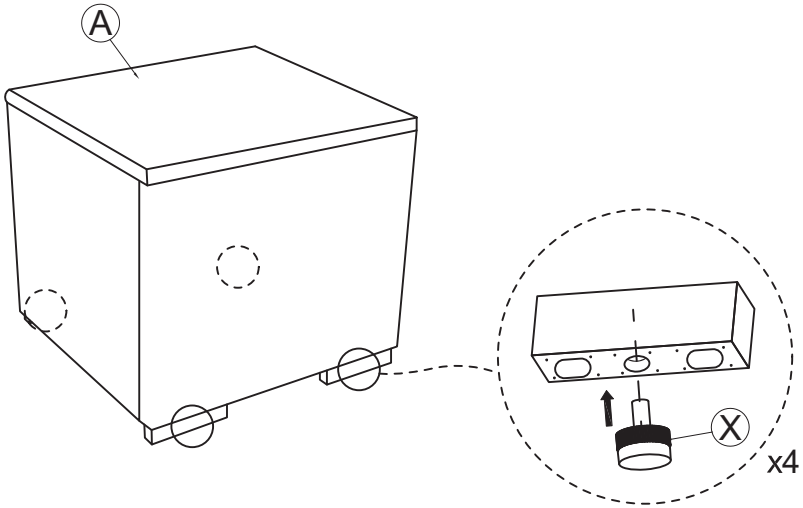

2 Place the ottoman on a level surface, and adjust height for balance. Place Seat Cushion (B) on the ottoman. Your Ottoman is ready for use.

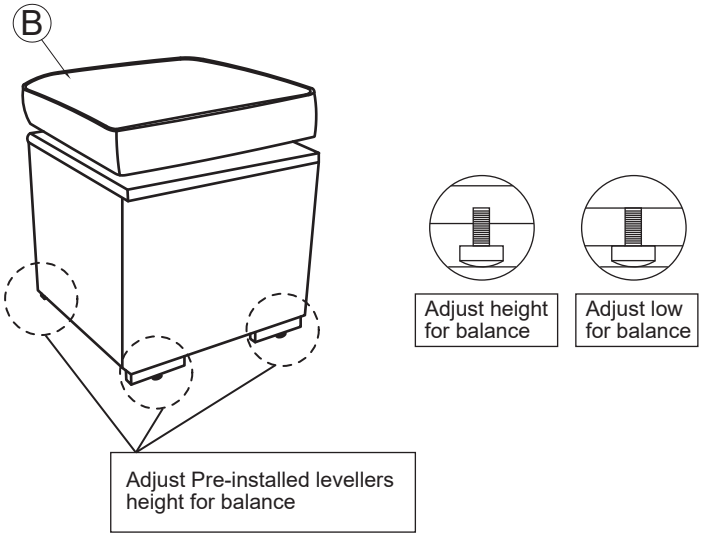

SECTIONAL SOFA CONNECTOR MANUAL

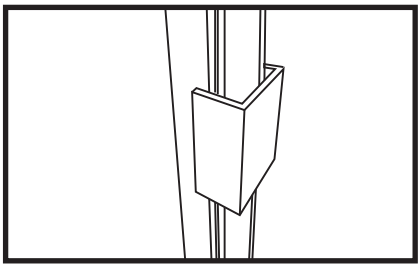

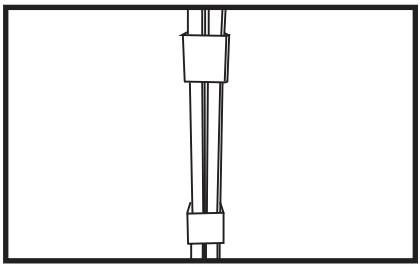

- Sectional outdoor wicker patio sofa is very light weight in nature and subject to movement.
- These high quality fasteners prevents movement between modules to maintain the aesthetically good look of your modular patio furniture set.
- Two fasteners are recommended between Two adjoining module.