TV STAND

Assembly Instructions - Please keep for future reference

NOTE:Comes with TWO PACKAGES with TWO TRACKINGS,may NOT be delivered at the same time

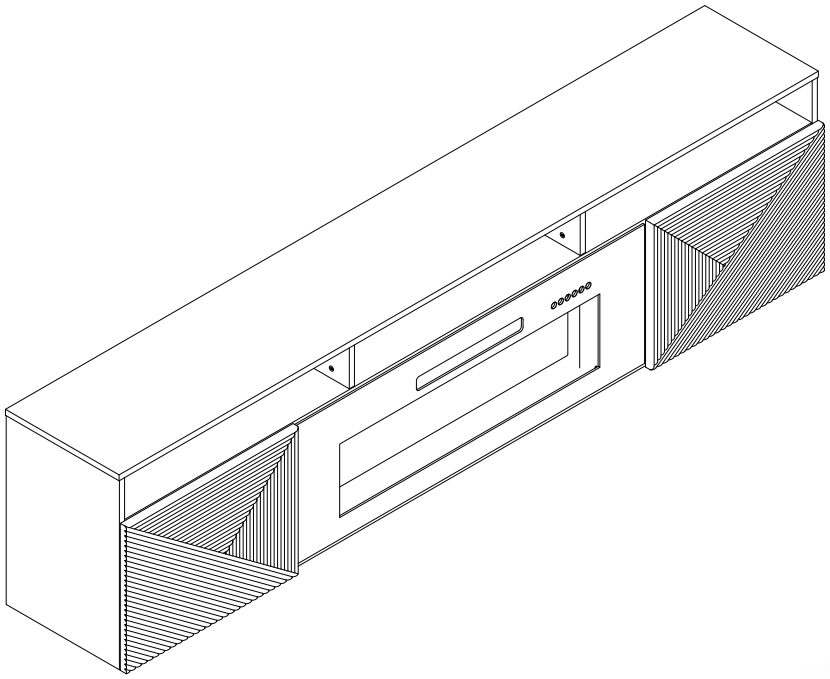

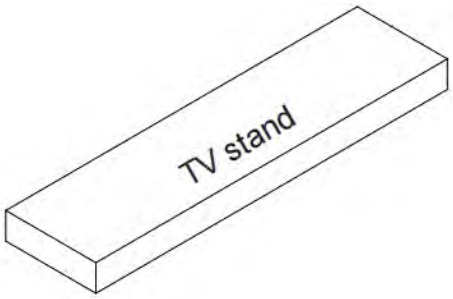

Carton 1 of 2

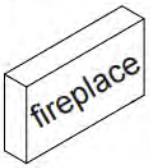

Carton 2 of 2

Dimensions
Width-70 inch Depth-13 inch Height-19.3 inch

Important – Please read these instructions fully before starting assembly

Safety and Care Advice

Important – Please read these instructions fully before starting assembly

• Check you have all the components and tools listed on the following pages.

• Remove all fittings from the plastic bags and separate them into their groups.

• Keep children and animals away from the work area, small parts could choke if swallowed.

• Make sure you have enough space to layout the parts before starting.

• During assembly do not stand or put weight on the product, this could cause damage.

• Assemble the item as close to its final position (in the same room) as possible.

• Assemble on a soft level surface to avoid damaging the unit or your floor.

• Parts of the assembly will be easier with 2 people.



·To reduce the likelihood of damaging your product please ensure that your power drill is set on a low torque setting.

Care and maintenance

·Only clean using a damp cloth and mild detergent, do no use bleach or abrasive cleaners.

·From time to time check that there are no loose screws on this unit.

·This product should not be discarded with household waste. Take to your local authority waste disposal centre.

Handy Hints

·Assemble all parts and bolts loosely during assembly, only once the product is complete should you fully tighten the bolts.

·Regularly check and ensure That all bolts and fittings are tightend properly.

WARNING
In order to help prevent overturning – please follow these instructions

To help prevent product toppling over please follow the below steps:-

Use the anti tip stap or wall fixing method provided (if applicable)
Do not allow children to climb or hang on the furniture
Do not open more than one drawer at a time
Do not place heavy items in the top drawers
Do not place heavy items on top of the furniture, unless the furniture has been designed for this purpose

please note that only the anti tip strap is provided.
You will need to provide wall plugs and screws applicable for your wall type

Components - Panels

Please check you have all the panels listed below

1 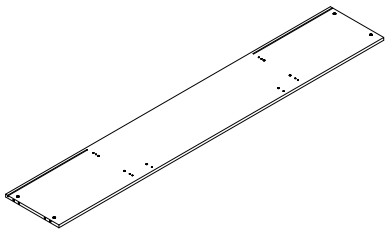 (1744*328*15mm)*1	2 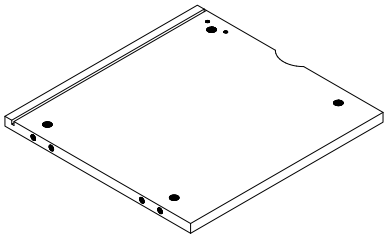 (340*328*15mm)*1	3 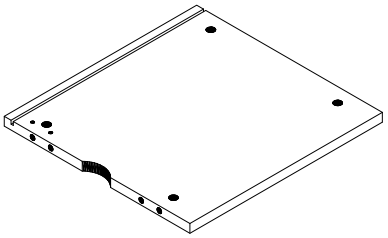 (340*328*15mm)*1
4 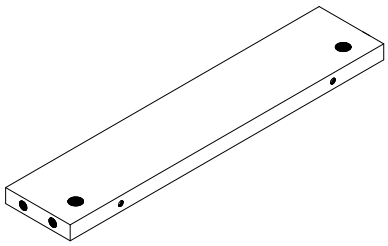 (340*70*15mm)*2	5 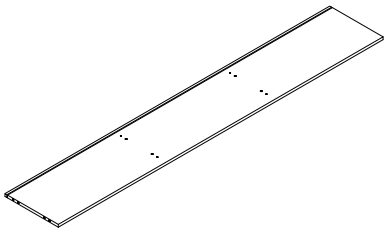 (1744*328*15mm)*1	6 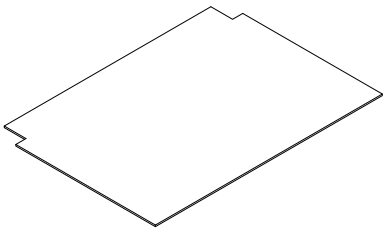 (414*349*3mm)*2
7 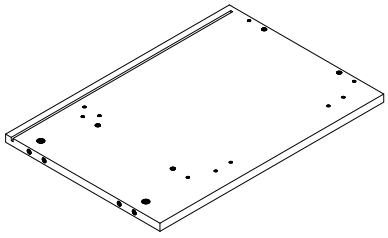 (477*329*15mm)*1	8 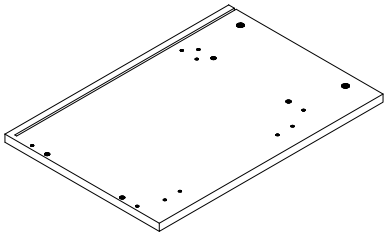 (477*329*15mm)*1	9 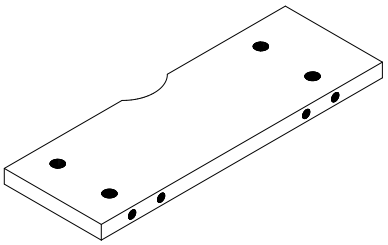 (310*107*15mm)*2
10 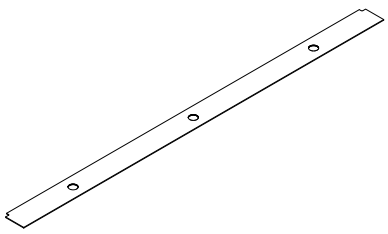 (1753*116*3mm)*1	11 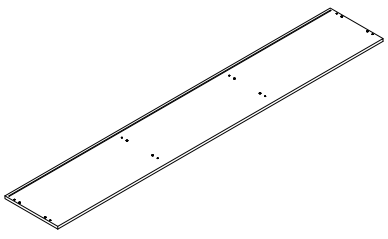 (1778*330*15mm)*1	12 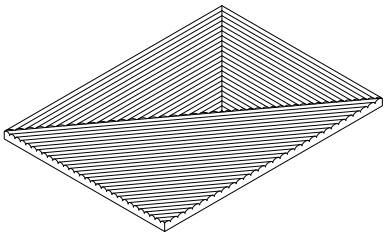 (370*425*18mm)*1
13 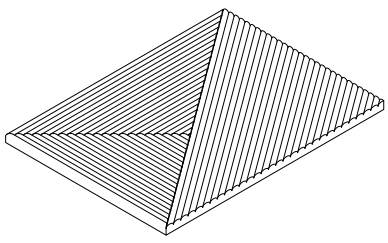 (370*425*18mm)*1	14 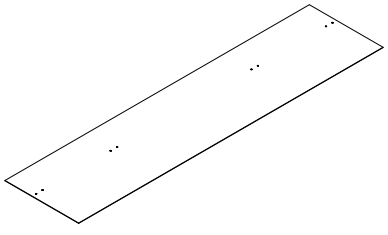 (1778*492mm)*1	

Components – Fittings

Please check you have all the panels listed below

Note: The quantitie below are the correcet amount to complete the assembly. In some cases more fittings may be supplied than are required.

A 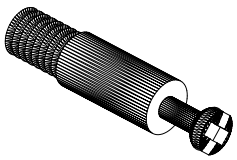 Cam Bolt*32	B 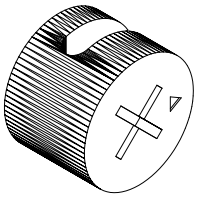 Cam Lock *32	C 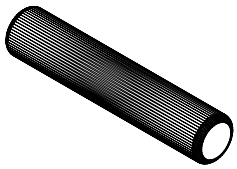 8*30mm Wooden Dowel*32
D 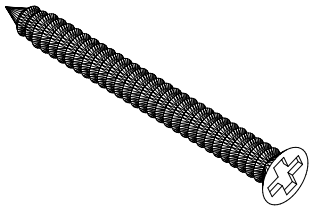 4*35mm Screw*4	E 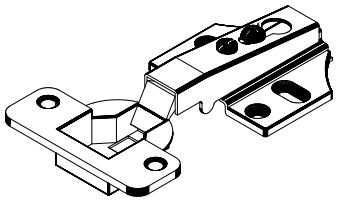 Hinge*4	F 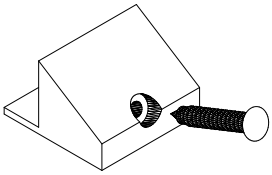 Back Panel Stiffener*12
G 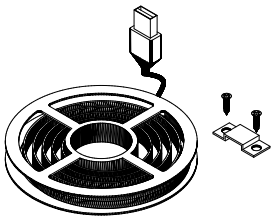 RGB Light*1	H 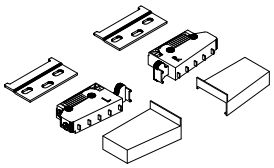 Weights-hoist*2	I 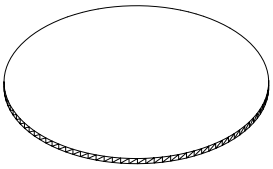 Sticker*12

Tools required

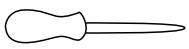

Phillips screwdriver
(medium & large)

Ruler - Use this ruler to help correctly identify the screws

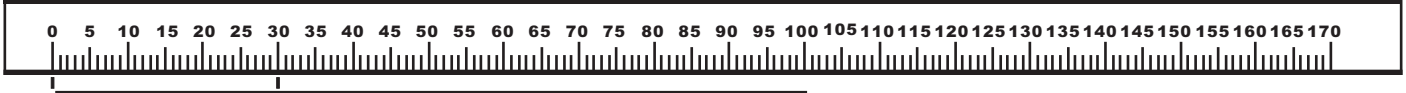



The screws length is measured from the head to the point (30mm screw shown).

Using Camlocks

Step 1

Connect the male camlock as diected in the assembly instructions using a scewdriver.

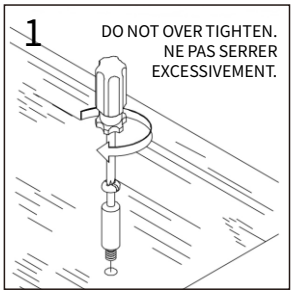

Step 2

Push the male camlock into the entry hole.

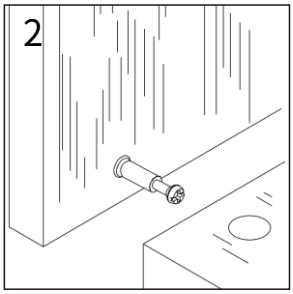

Step 3

Insert the femle camlock as shown in the instruction.
Note：ensure that the arrow on the top of the camlock points towards the entry hole for the male camlock.

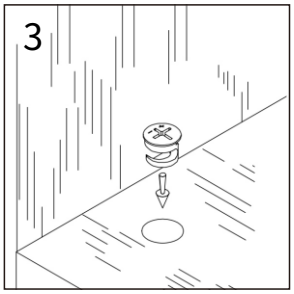

Step 4

Turn the female camlock clockwise with a screwdriver.
You should feel a click when the camlock is locked in place.
The joint is now secure.

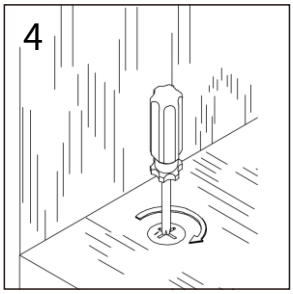

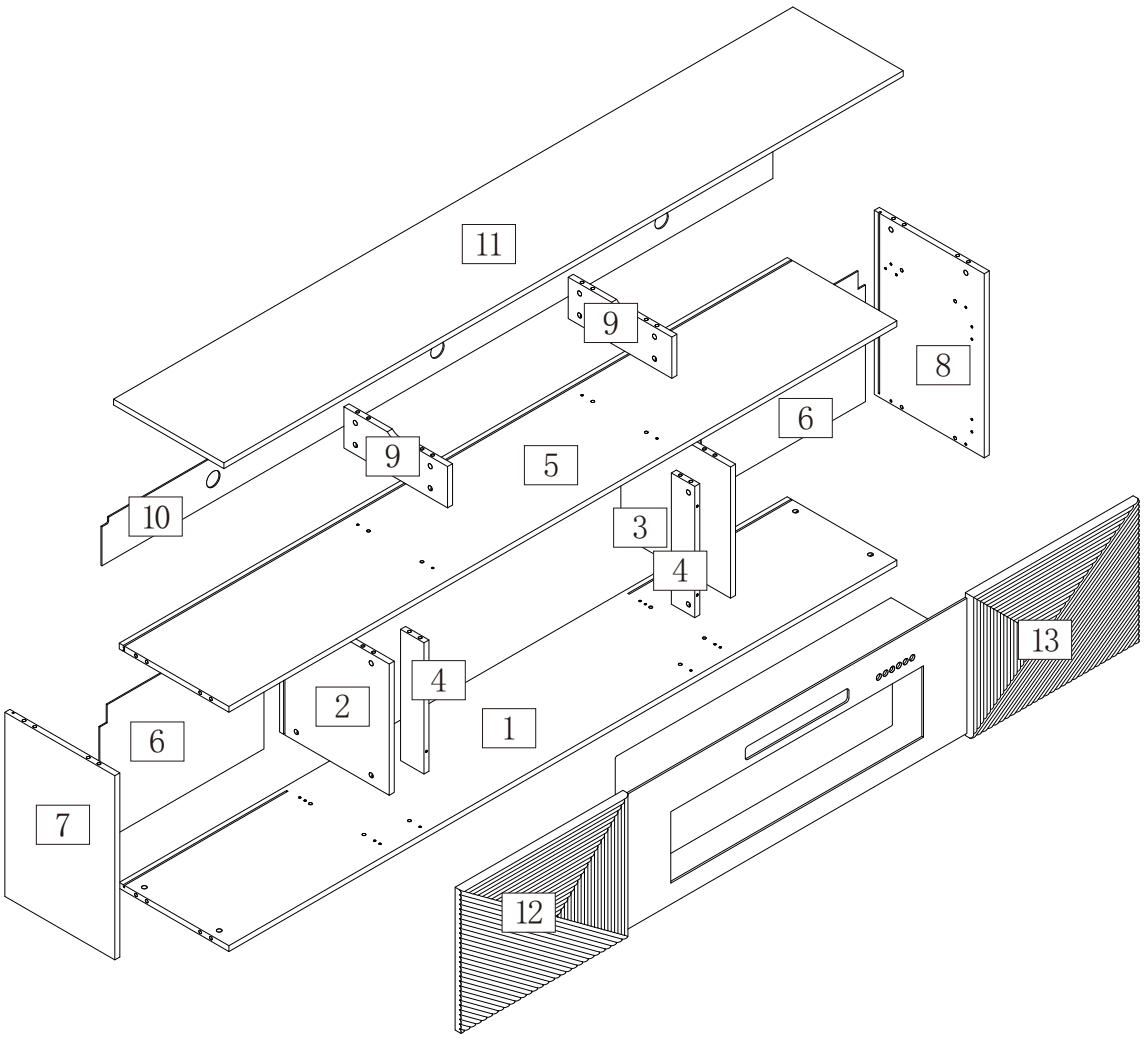

Assembly instructions

Step 1

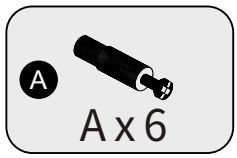

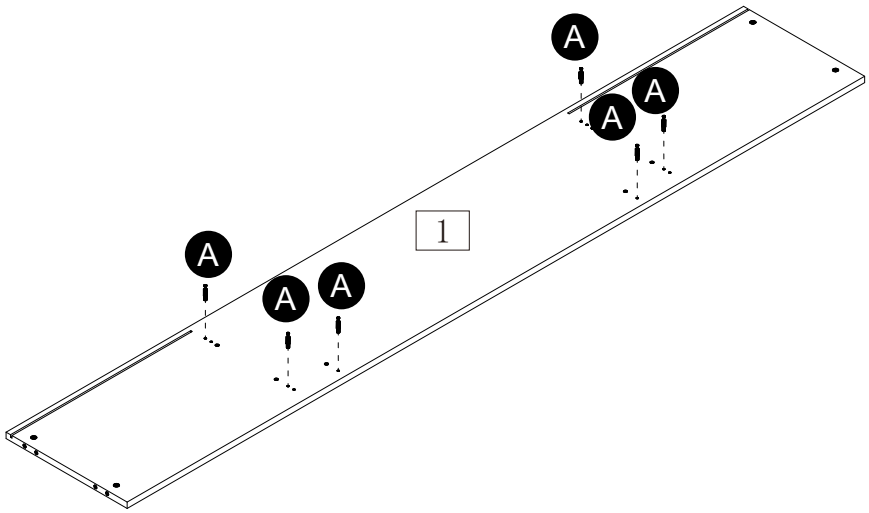

Attach Cam Bolt (A) to part (1)

Step 2

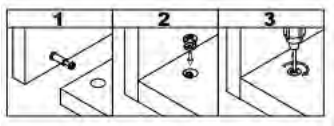

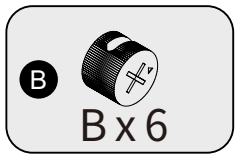

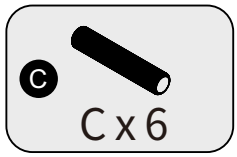

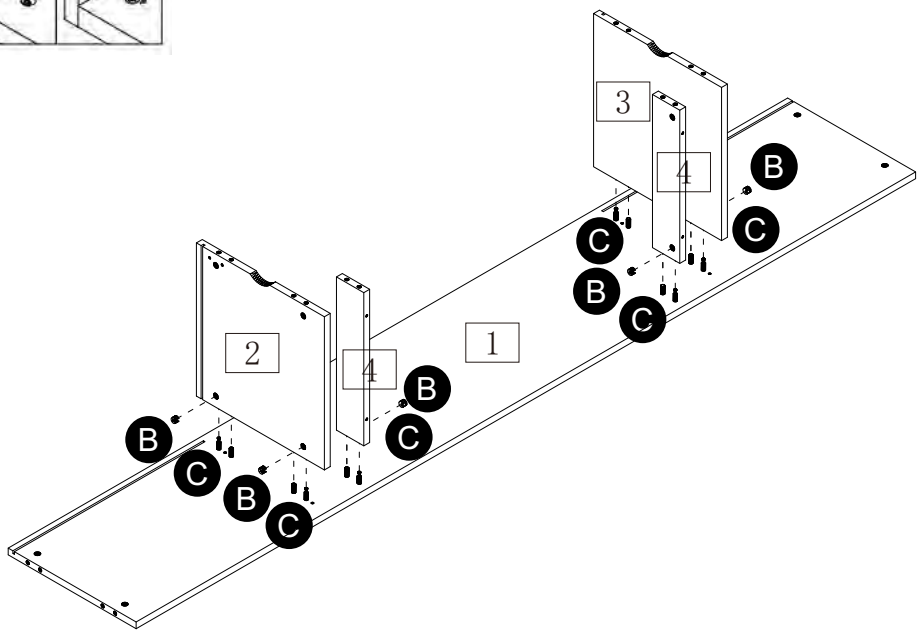

Use Cam Lock (B) and wooden Dowel (C) to attach part (2.3) and part (4) to part (1) .then lock it

Assembly instructions

Step 3

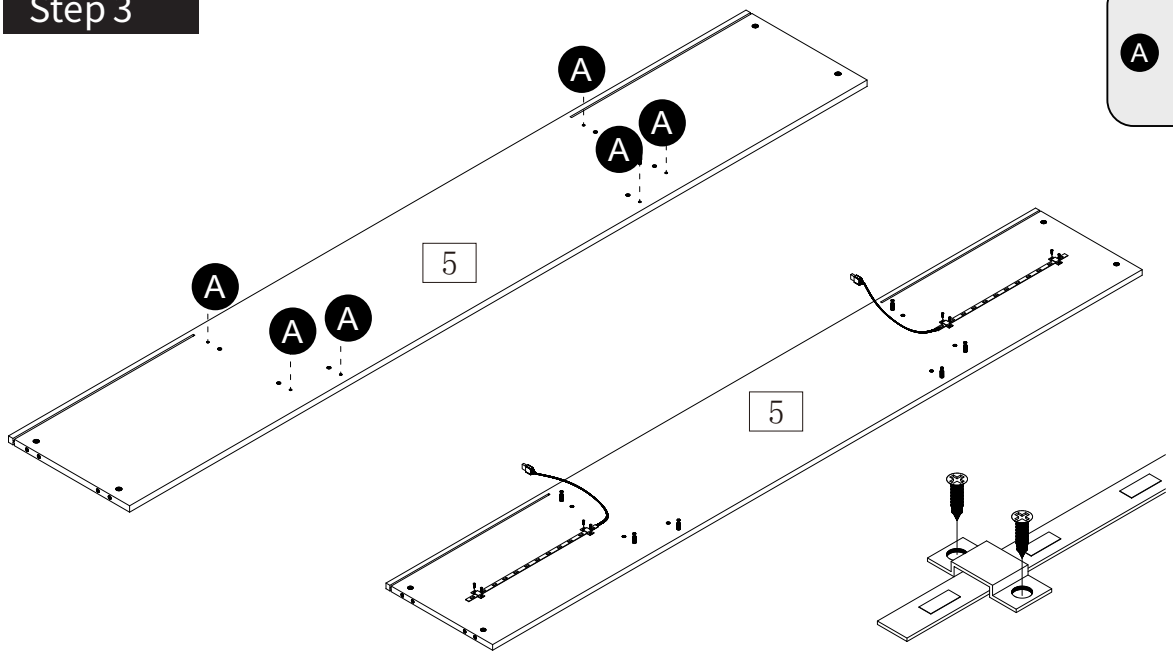

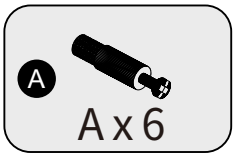

Attach Cam Bolt(A) to part(5).
Attach LED lights to part (5)
Note: Assembly of LED Light is optional.
You can find buckles and screws in the box of the fireplace

Step 4

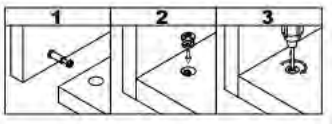

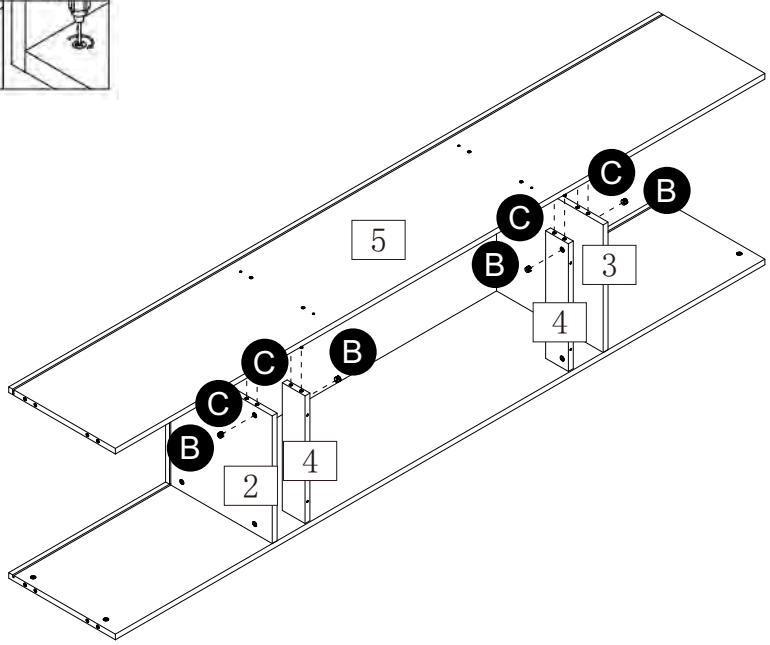

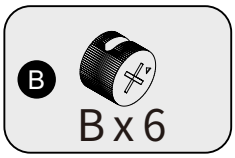

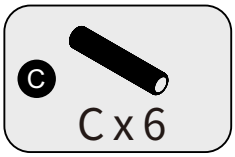

Use Cam Lock (B) and wooden Dowel (C) to attach part (2.3) and part (4) to part (5) .then lock it

Assembly instructions

Step 5

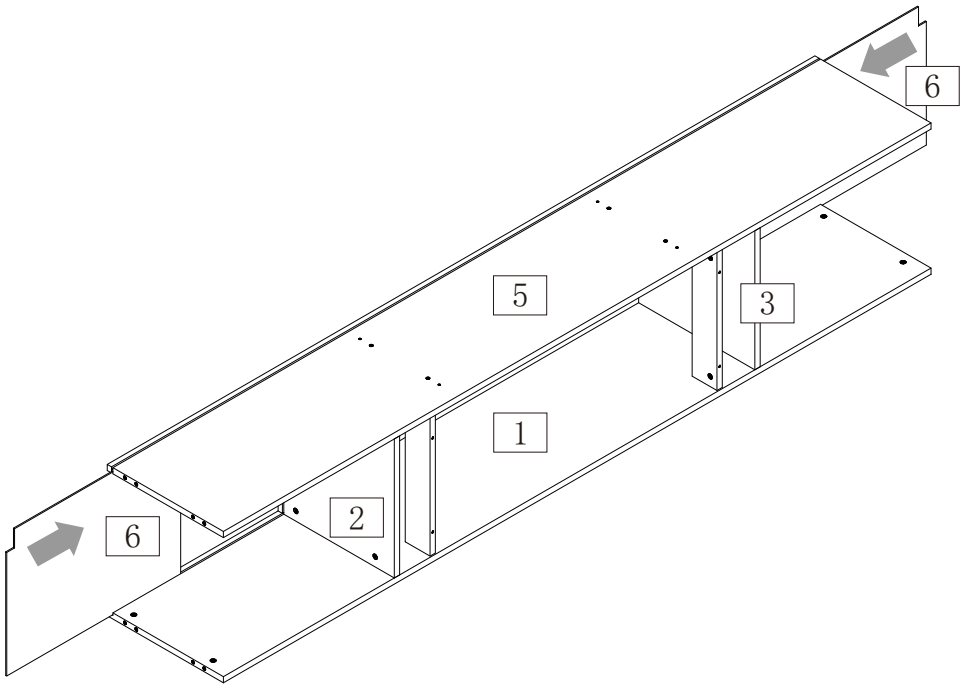

Slide part (6) into part (1.5) and part (2.3)

Step 6

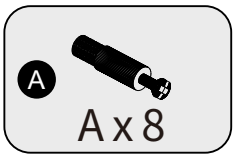

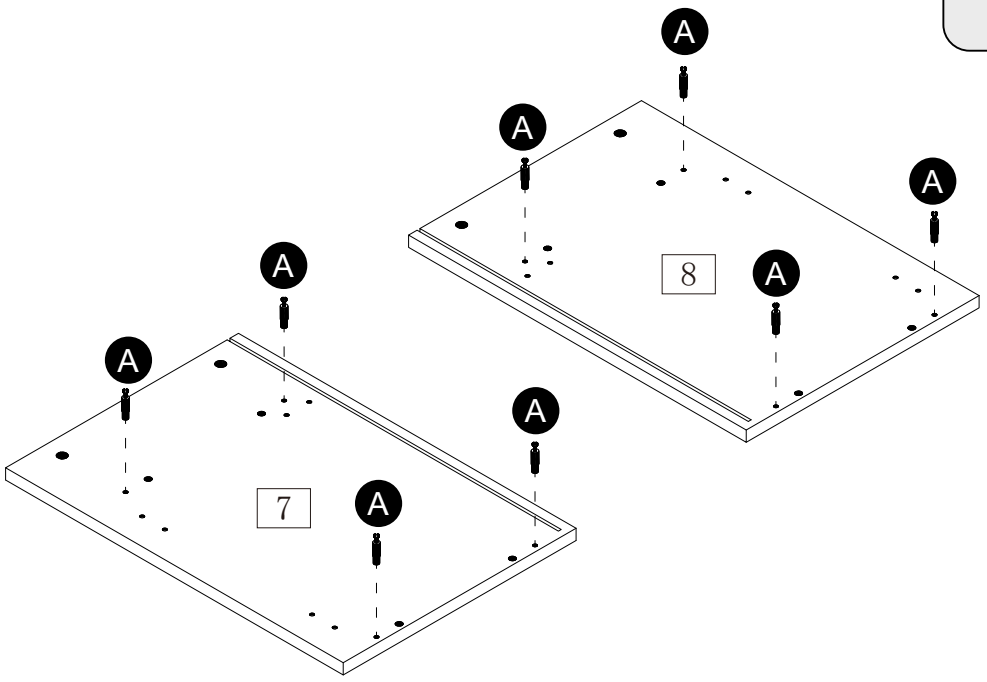

Attach Cam Bolt (A) to part (7.8)

Assembly instructions

Step 7

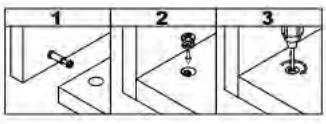

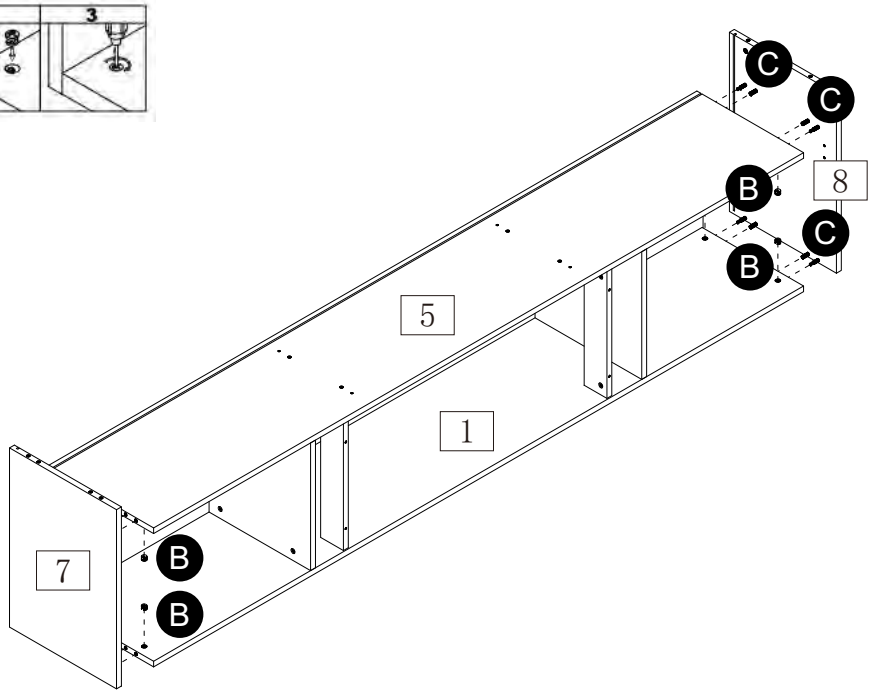

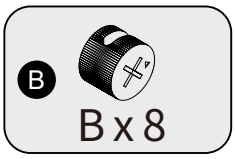

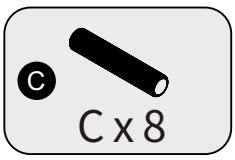

Use Cam Lock (B) and wooden dowel (C) to attach part (7.8) and part (1) to part (5) .then lock it

Step 8

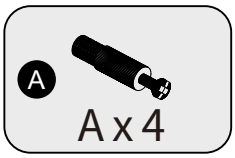

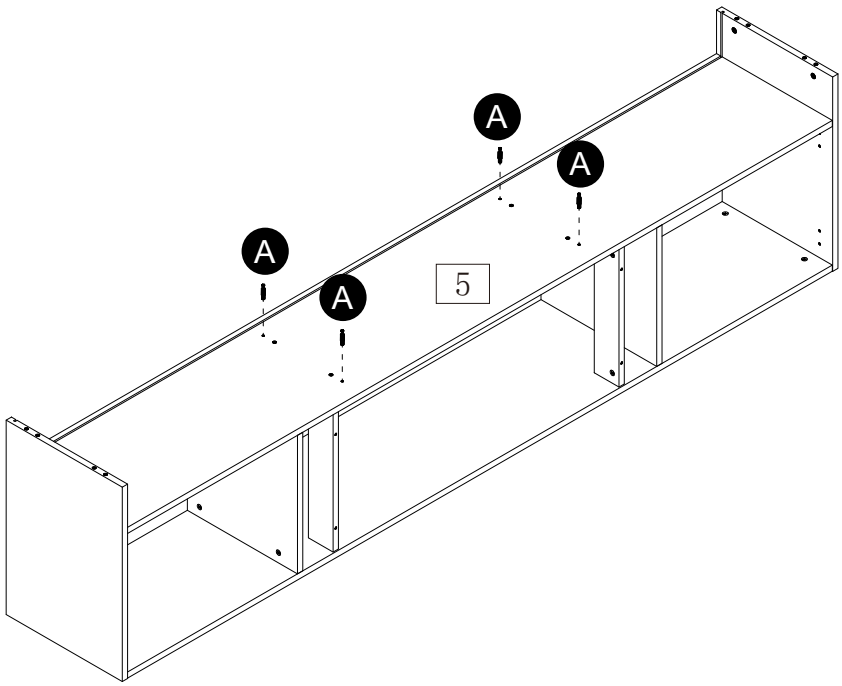

Attach Cam Bolt (A) to part (5)

Assembly instructions

Step 9

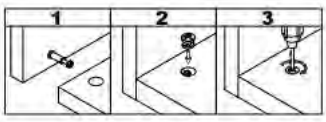

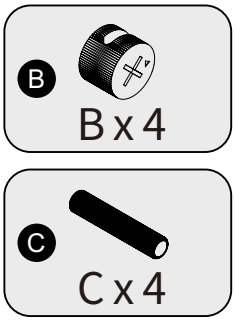

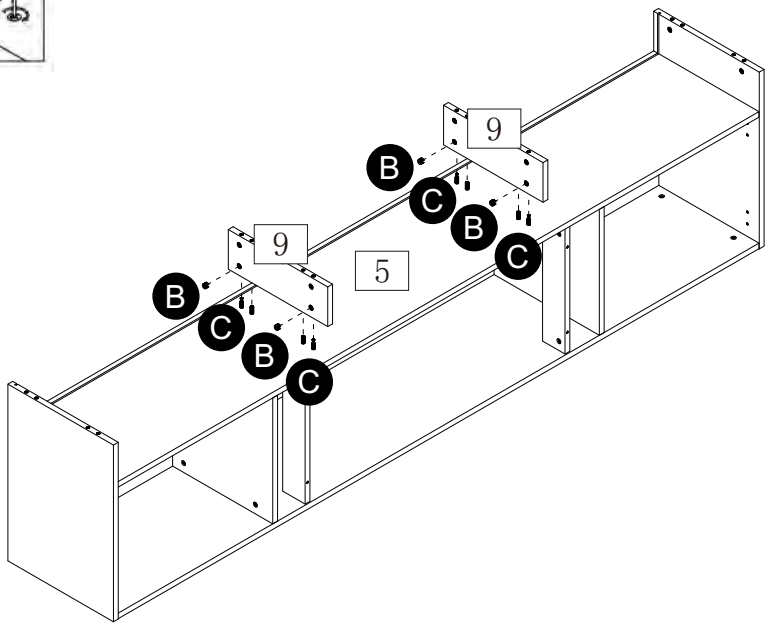

Use Cam Lock (B) and wooden Dowel (C) to attach part (9) on part (5) , then lock it.

Step 10

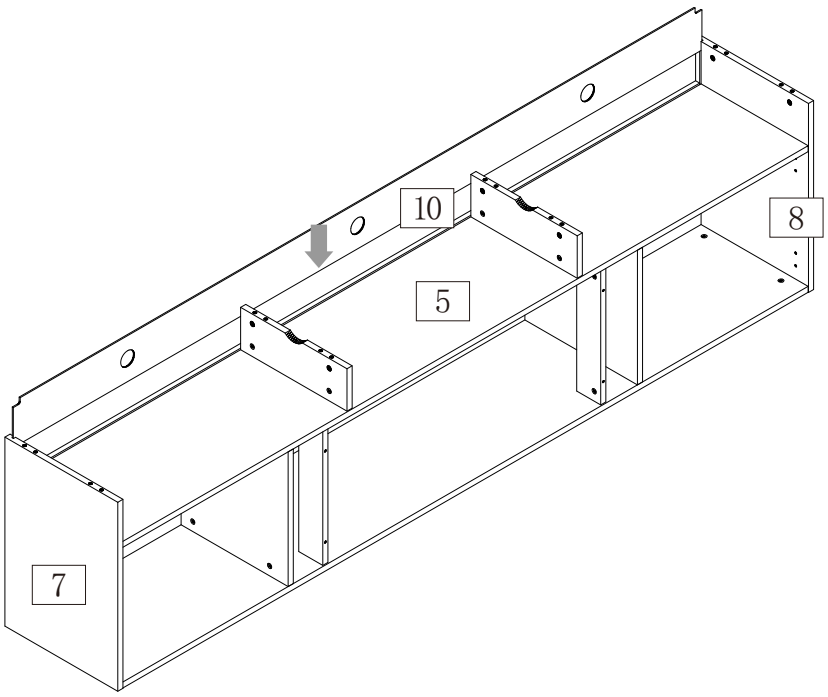

Slide part (10) into part (7.8) and part (5)

Assembly instructions

Step 11



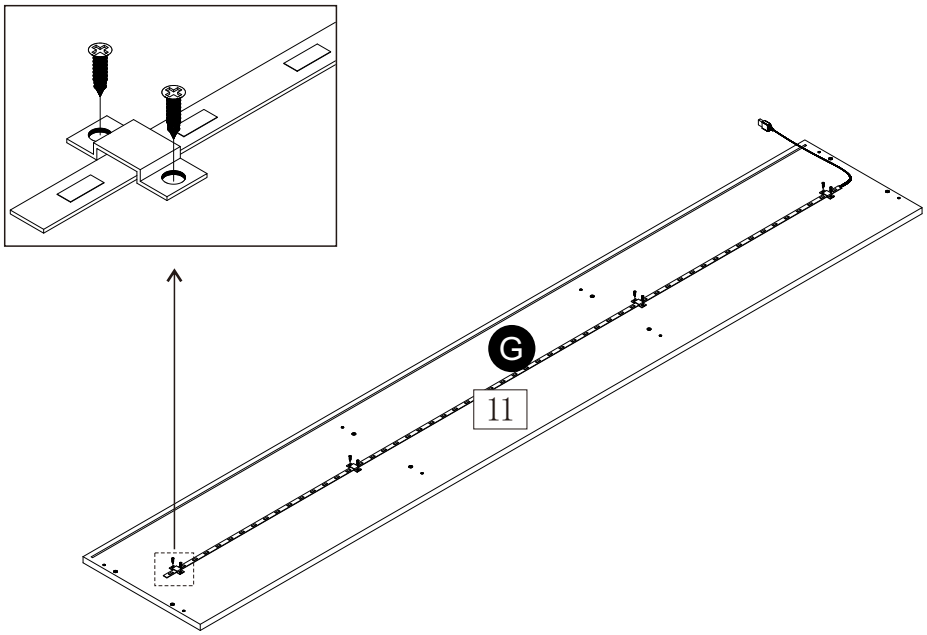

Stick Light (G) on part (11) .then secured it by plastic button and screw, light need to be in the middle of the top panel

Step 12

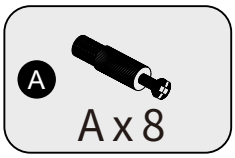

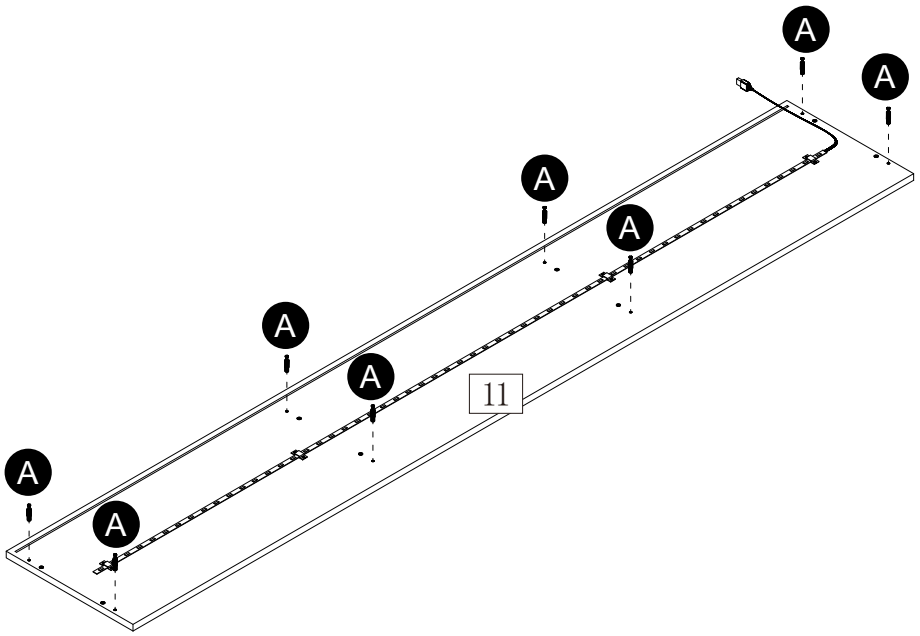

Attach Cam Bolt (A) to part (11)

Assembly instructions

Step 13

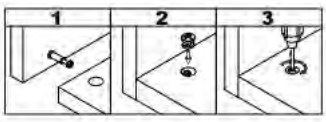

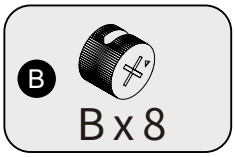

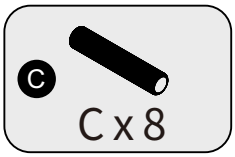

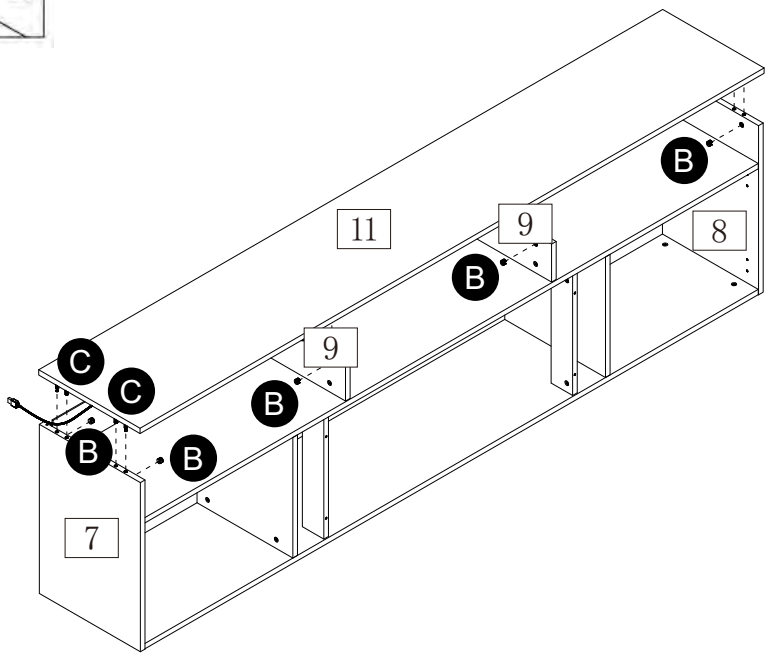

Use Cam Lock (B) to attach part (11) to part (9) and part (7.8) .then lock it

Step 14

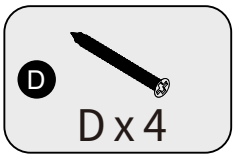

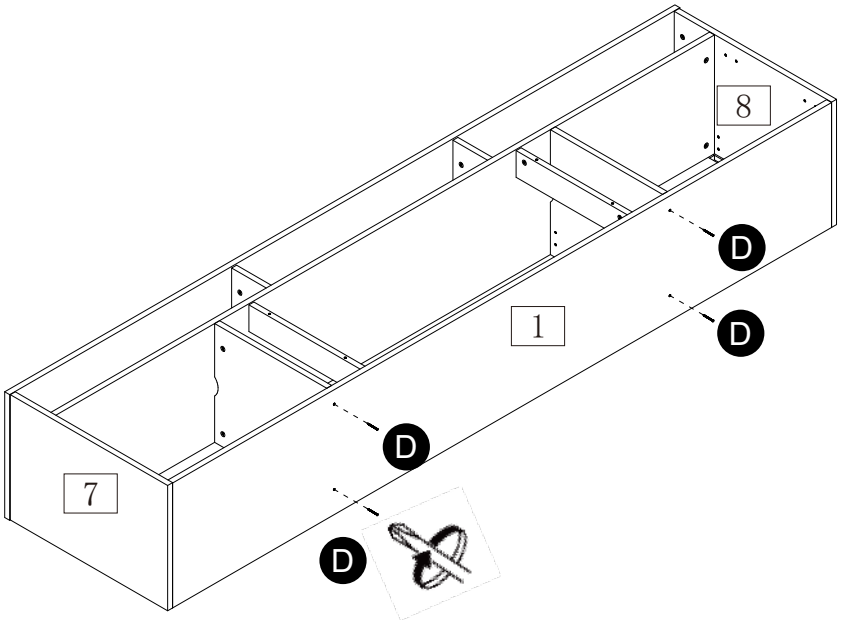

Rollover the assembled cabinet. install Screw (D) to part (1)

Assembly instructions

Step 15

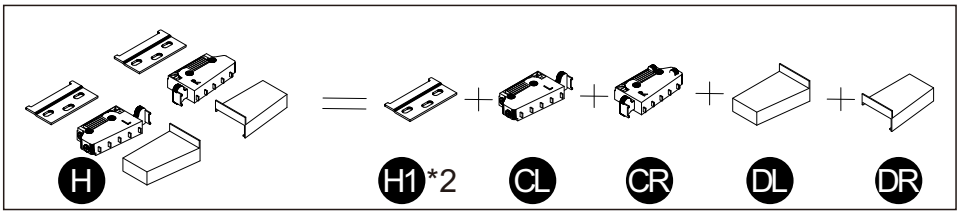

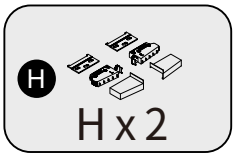

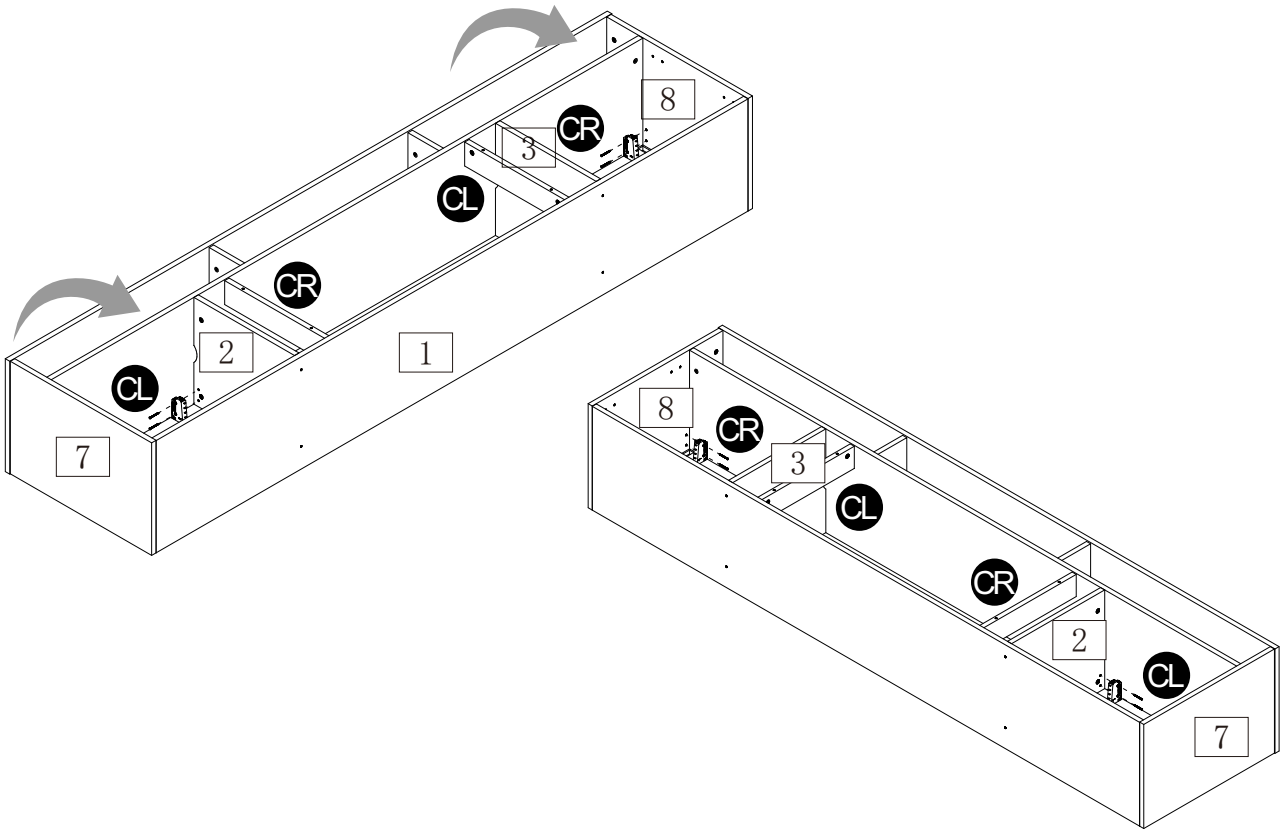

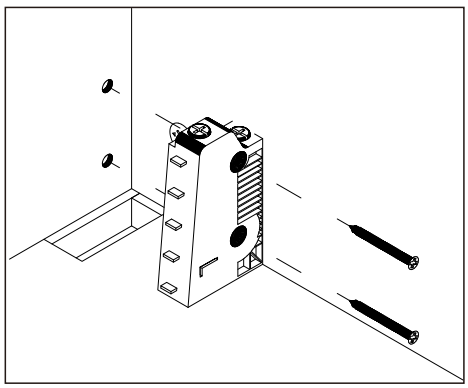

CL

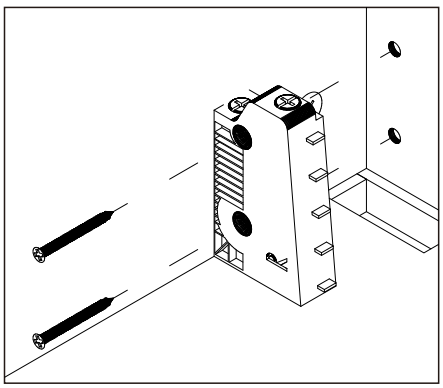

CR

Install (CL)of part (H) to part (7) and part (3) .
Install (CR)of part (H) to part (8) and part (2) ,then stand it up.

Assembly instructions

Step 16

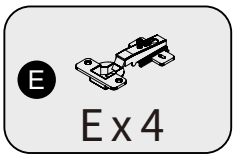

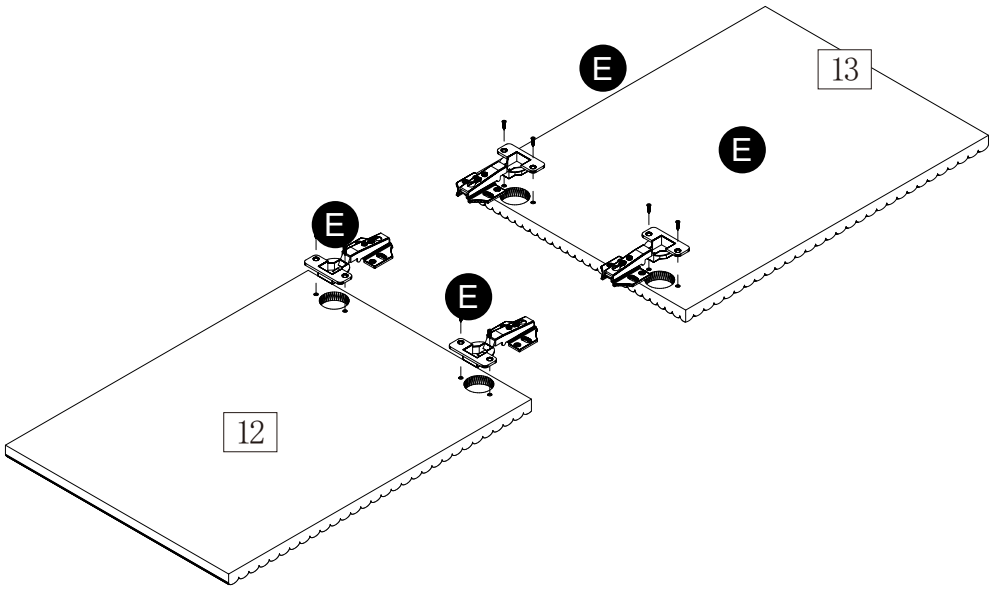

Install part (E) on part (12.13)

Step 17

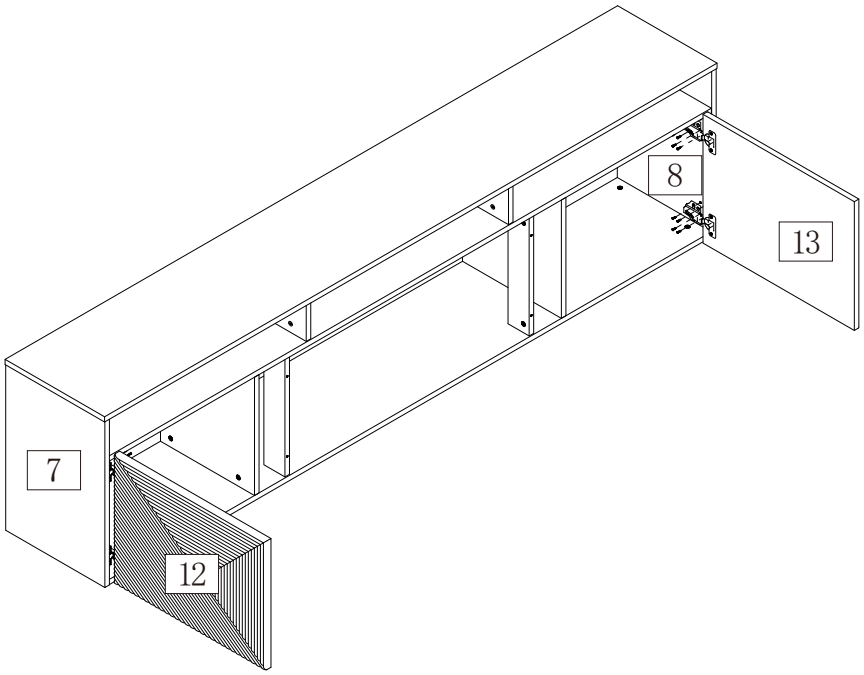

Use Screw that comes with hinge to attach part (12.13) to part (7.8) .then lock it

Assembly instructions

Step 18

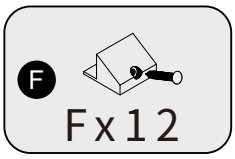

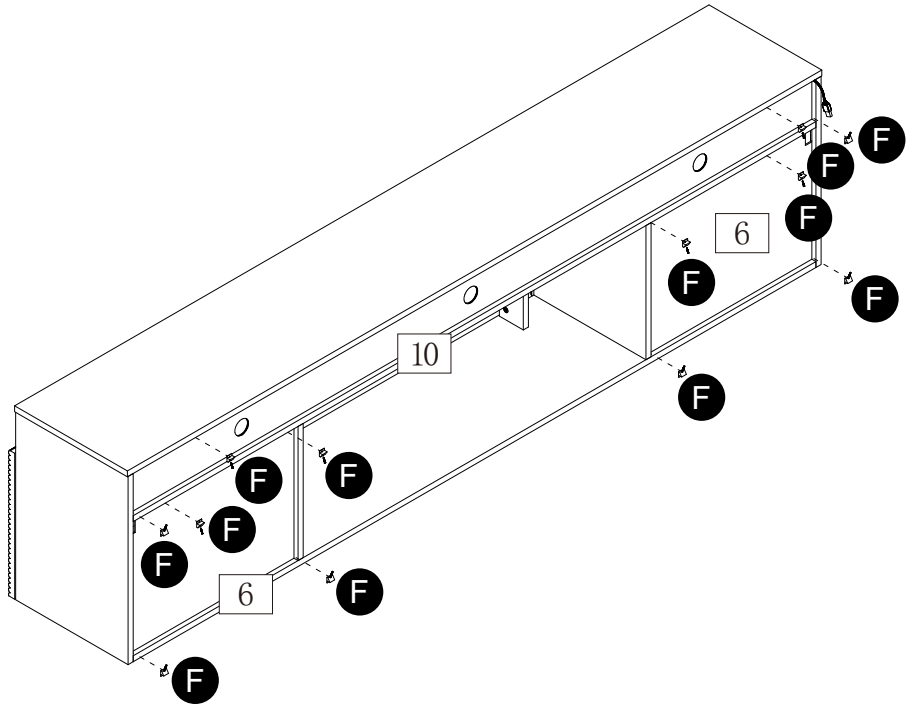

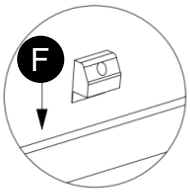



Install the Back Panel Stiffener(F) to part (6.10) .then lock it

Step 19

Note: Fireplace is in the BOX of Fireplace, not in the box of TV stand.

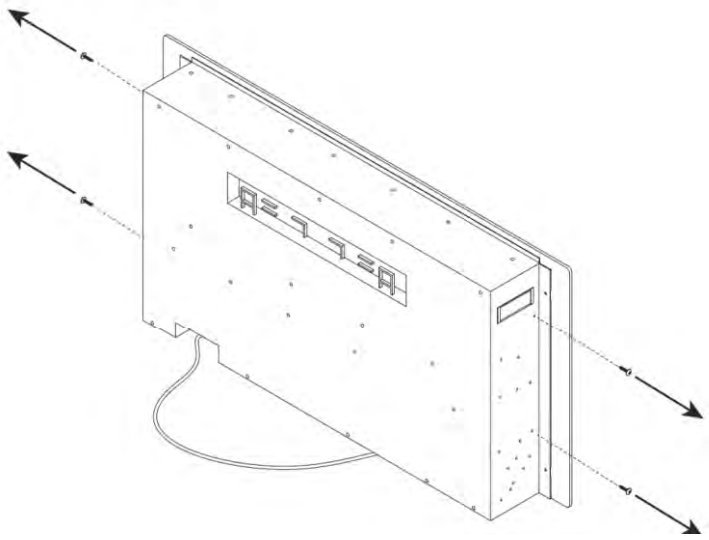

Before attaching fireplace to TV stand, unscrew four silver screws on the both sides of fireplace.

Assembly instructions

Step 20

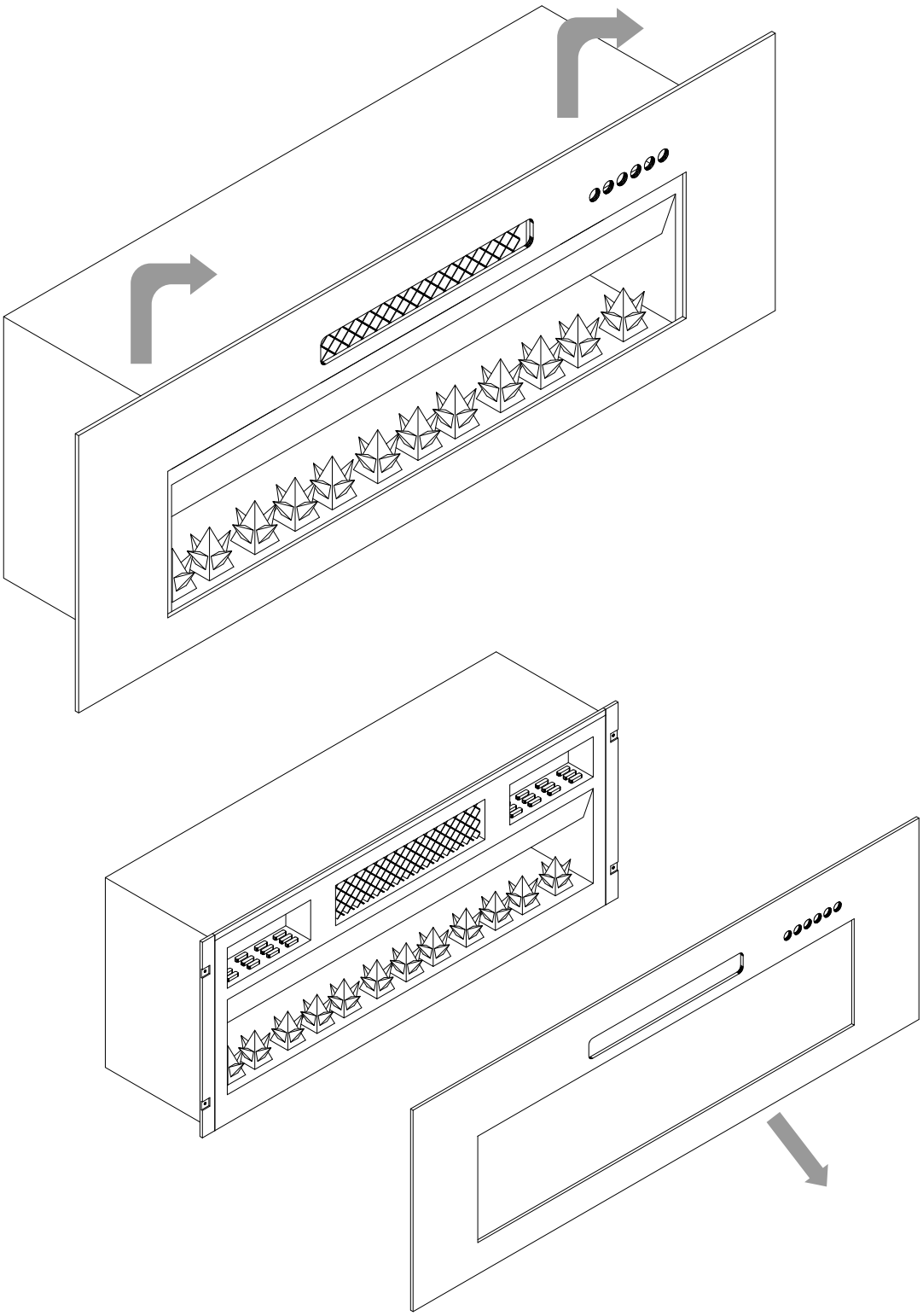

Carefully remove the front glass, and place it on a soft and clean surface.

Assembly instructions

Step 21

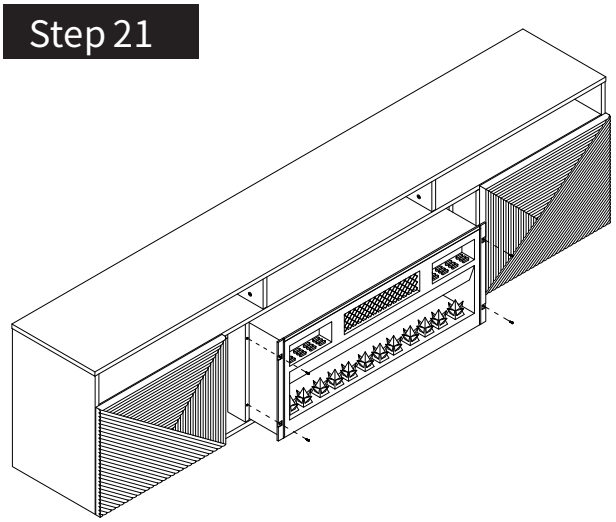

Insert the fireplace to the stand and secure it with screw that comes with fireplace.

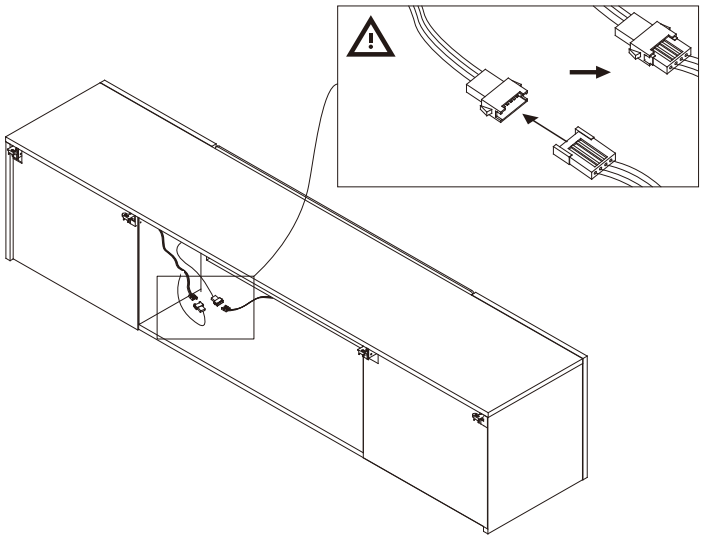

Plug the two sidelights into the jacks on the back of the fireplace.

Step 22

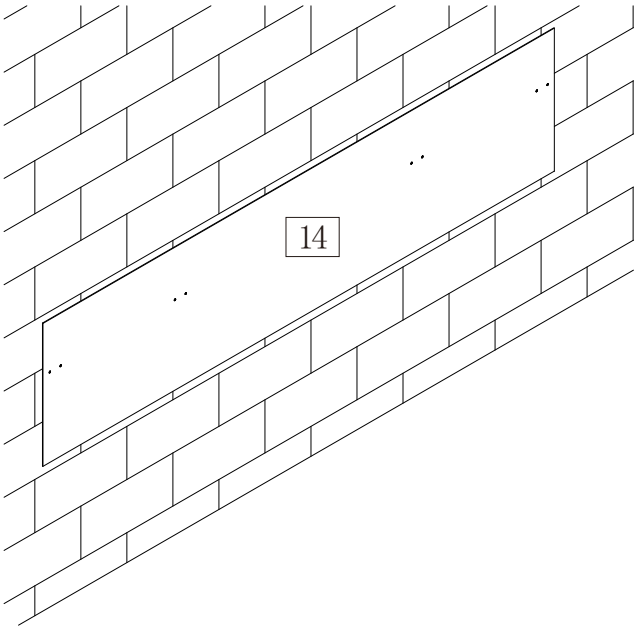

Tape the carboard to the wall where the TV will be mounted Drill the hole on the target mark on the carboard.
Note 1：Use a level to make sure the carboard is level.
Noted 2：Always insure the wall to be drilled is free from hidden ecectrical wires. water and gas pipes.

Assembly instructions

Step 23

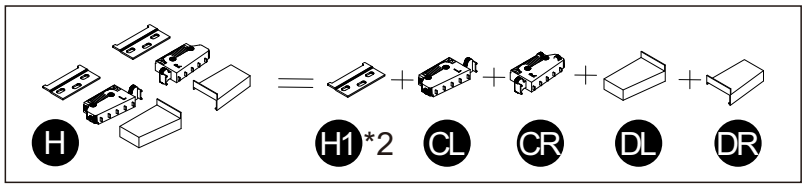

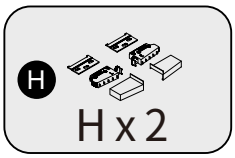

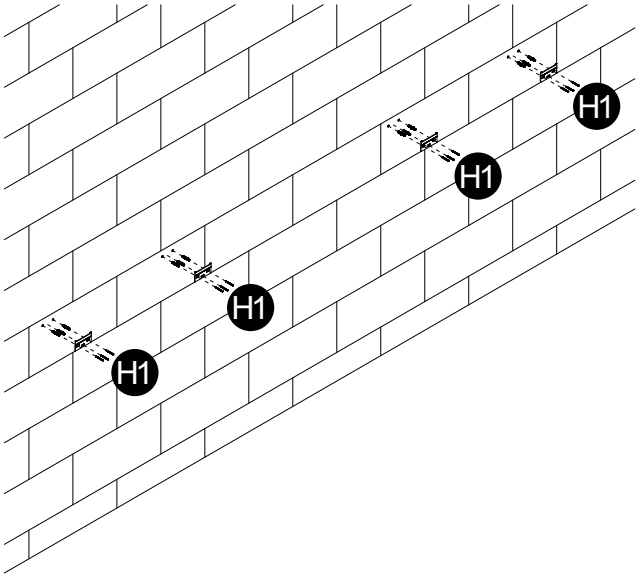

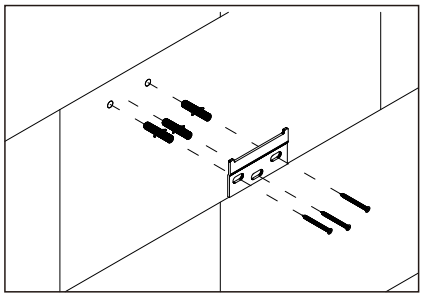

Use Screw and plastic cover comes with Weights-hoist(H) to secure cabinet on the wall

Step 24

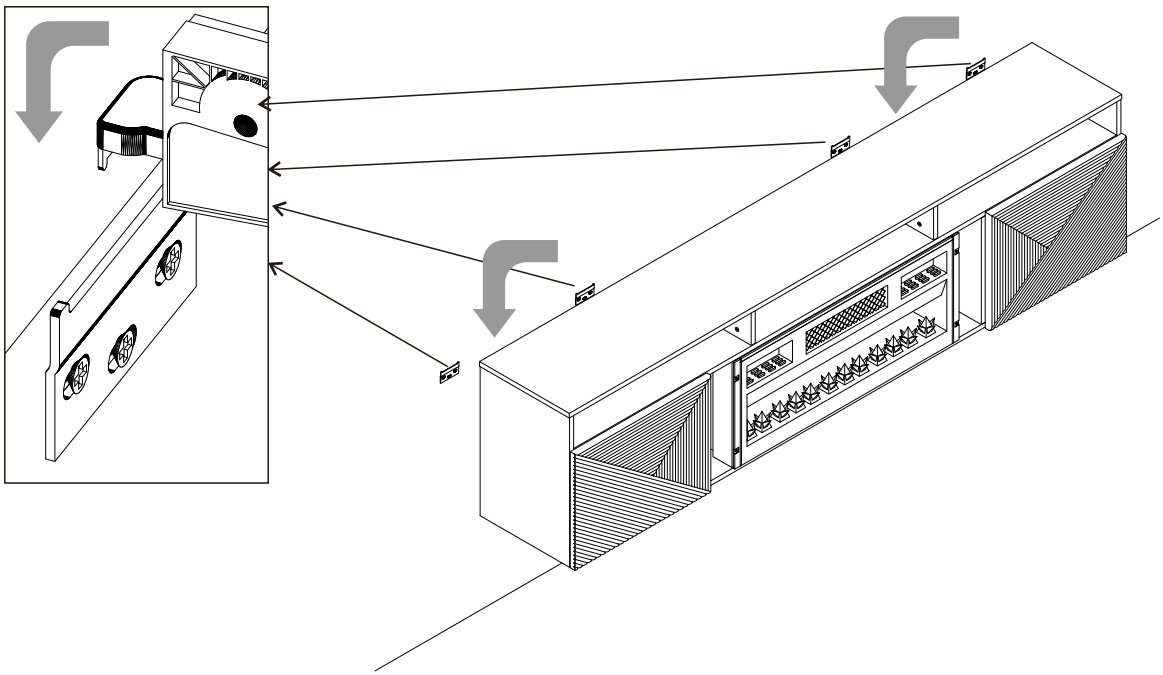

Hang the cabinet on the wall.，make sure all 4 brackets and cleats are securely interlocked.

Assembly instructions

Step 25

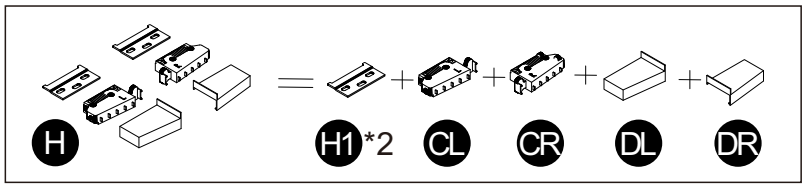

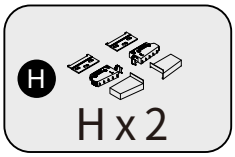

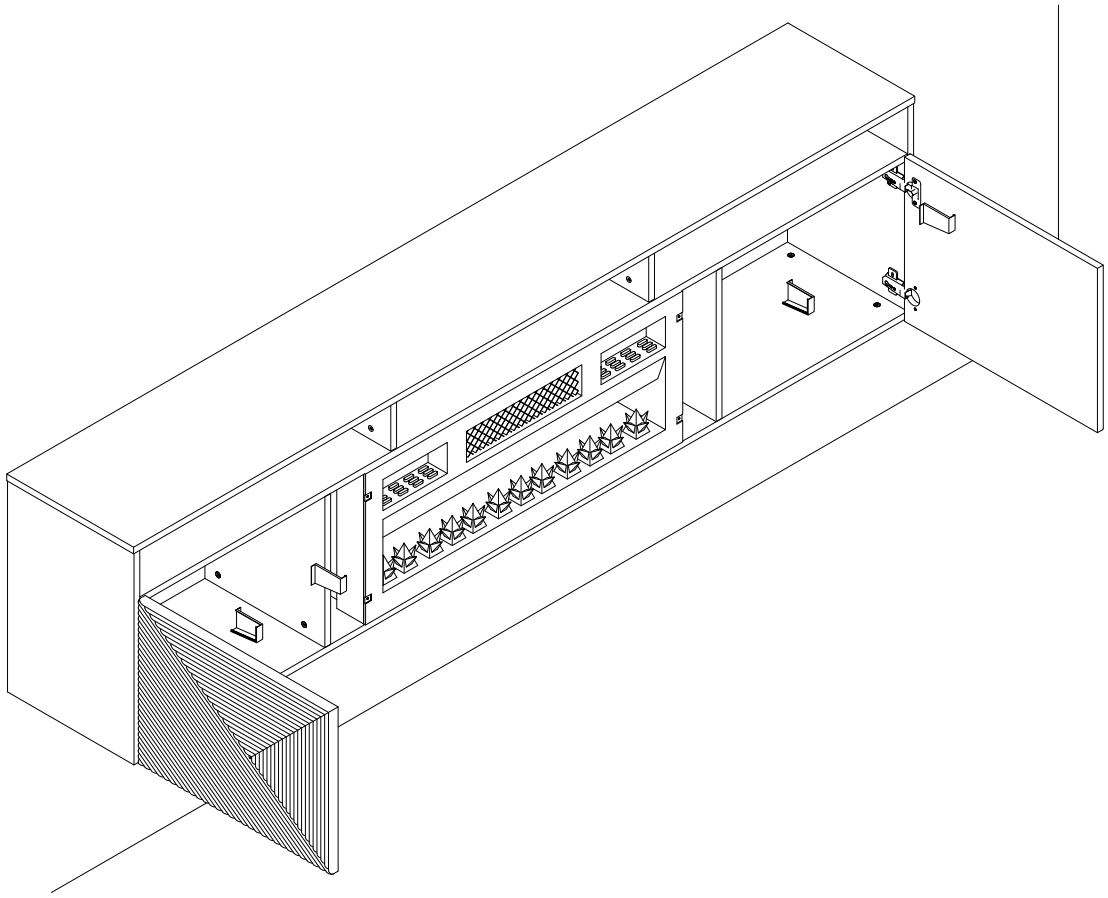

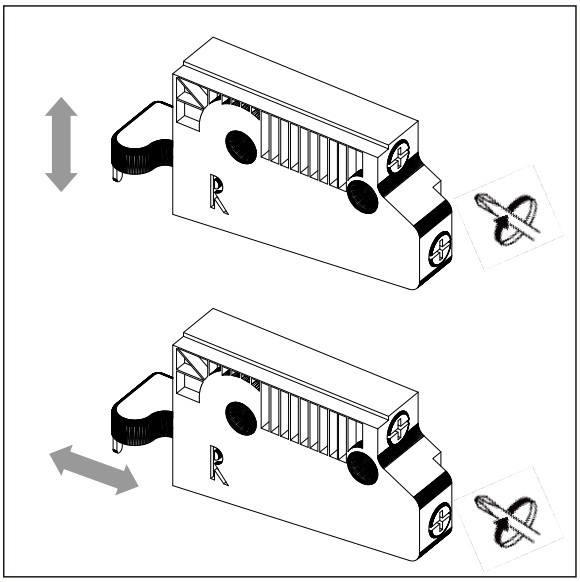

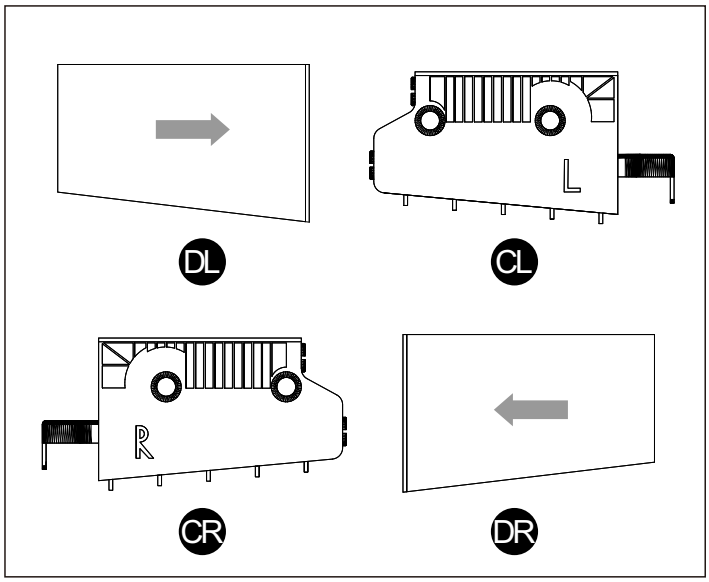

Put the cabinet on the correct position.
Then cover the part (DL.DR) on the part (CL.CR) of part (H) .

Assembly instructions

Step 26

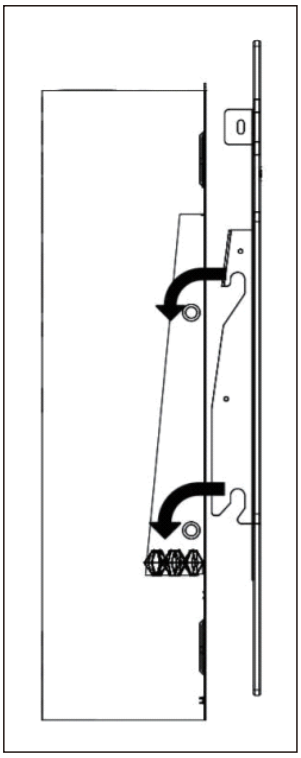

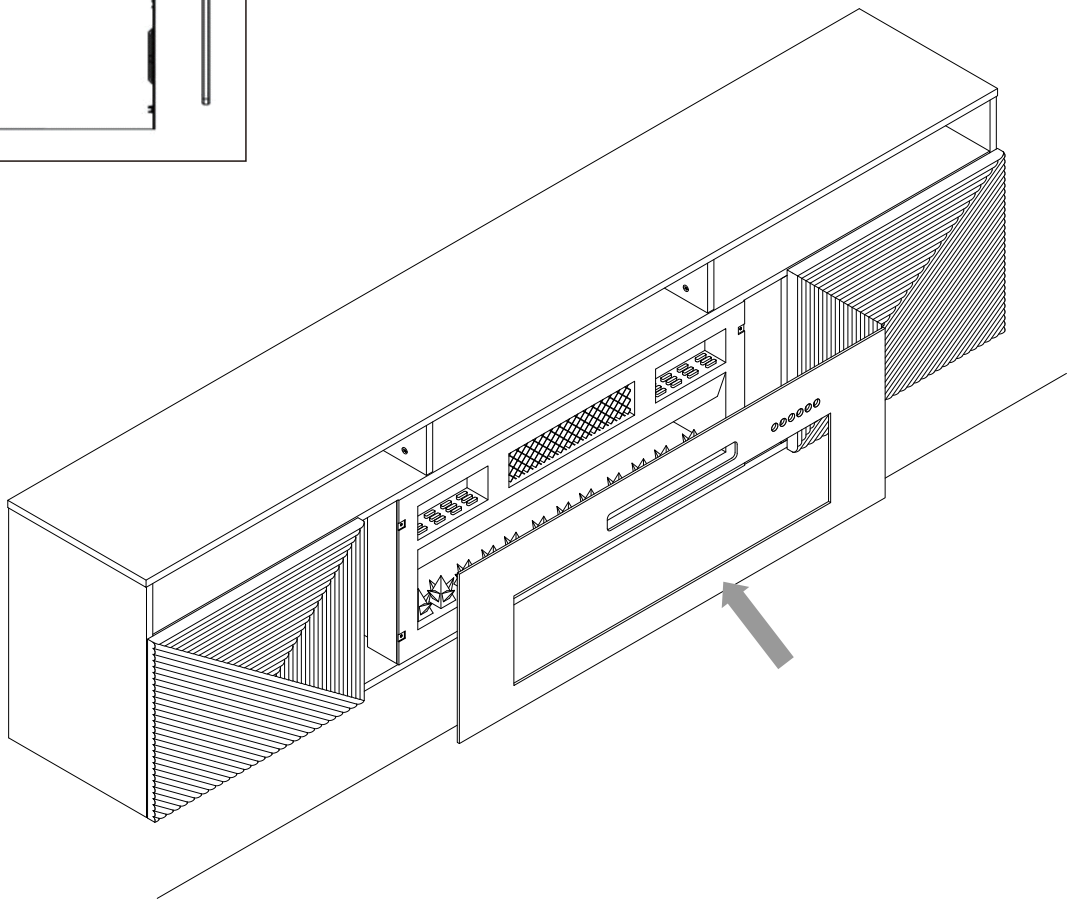

Put crystal in the fireplace.then attach the glass front to the fireplace.

Assembly instructions

Step 27

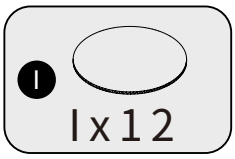

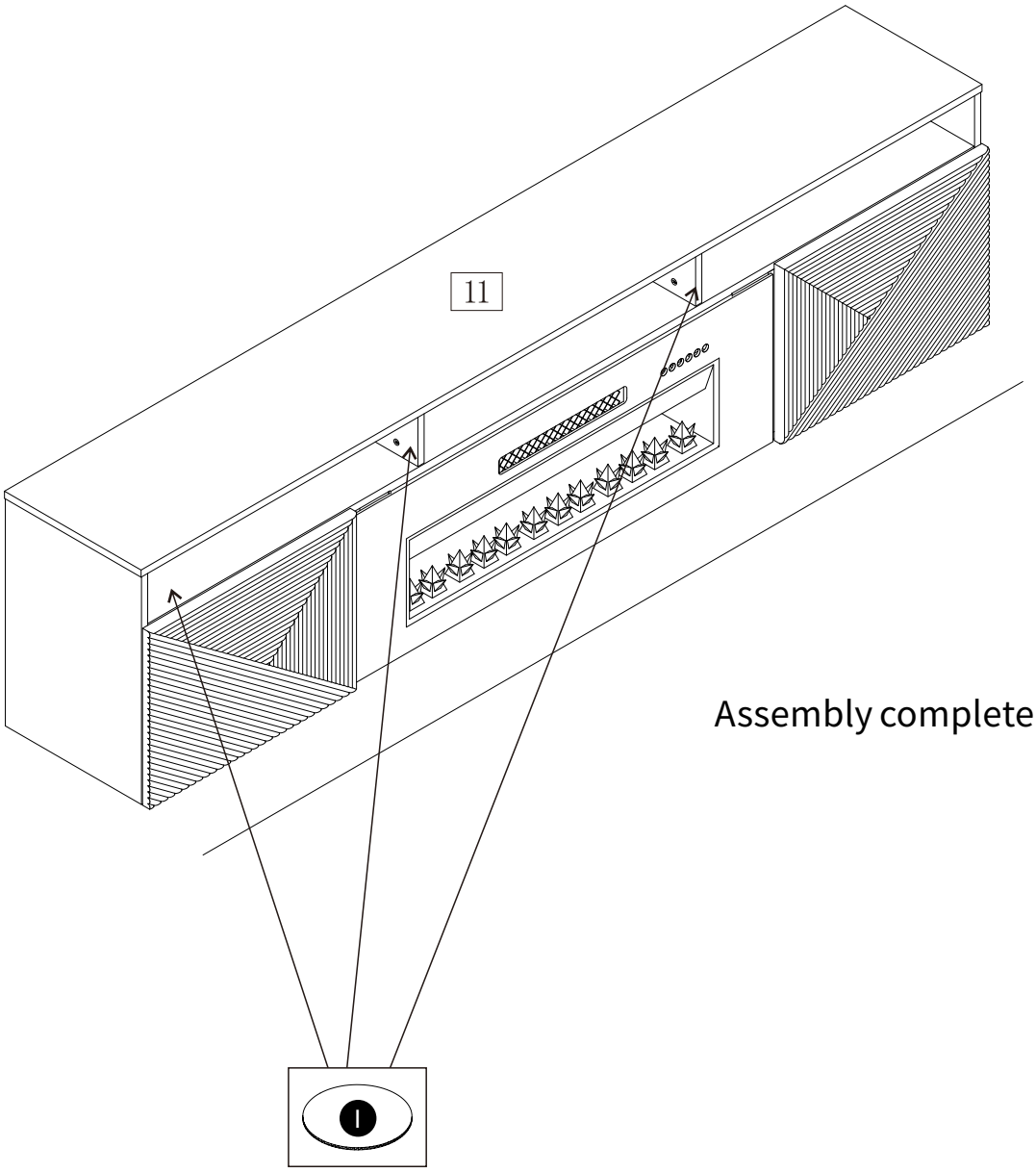

Assembly complete

Use the sticker(I)to cover the screw holes

A Guide to Wall Mounting & Fixings

Important note:

If plastic wall plugs (rawl plugs) are supplied with your product, e.g.:



–these are only suitable for use in masonry walls.

If you are in any doubt about the correct wall plugs for your wall, seek professional advice.

Failure of the product due to using the incorrect fixings is the responsibility of the installer.

Important: when drilling into walls always check that there are no hidden wires or pipes etc.

Make sure that the screws and wall plugs being used are suitable for **supporting your unit. Consult a qualified tradesperson if you** are unsure.

Hints:

1: General rule: ⚠ always use a larger screw and wall plug if you are not sure.
2: Ensure you use the recommended drill bit to match the wall plug and hole size.
3: Ensure you drill the hole horizontally; do not force the drill or enlarge the hole.
4: Take extra care when drilling high walls, ceilings and ceramic tiles. Ensure wall plugs are inserted bevond the thickness of the ceramic tiles to avoid the tiles splitting or cracking.
5: Ensure wall plugs are well fitted and are a tight fit in the drilled hole.

Types of walls

You can use one of the following types of wall plug if your walls are madeof brick breeze block, concrete, stone or wood.

No.1"General Purpose" wall plug

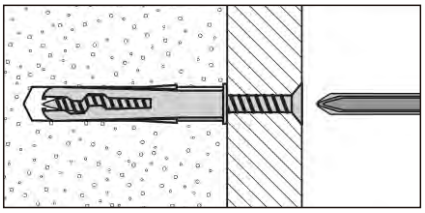

Generally aerated blocks should not be used to support heavy loads, use a specialist fitting in this case. For lightloads, general purpose wall plugs can be used.

No.3 "Cavity Fixing" wall plug

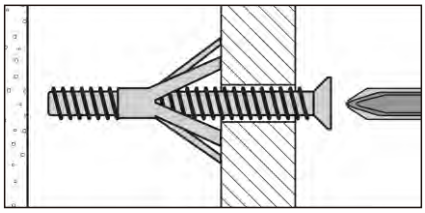

For use with plasterboard partitions or hollow wooden doors.

No.5"Hammer Fixing" wall plug

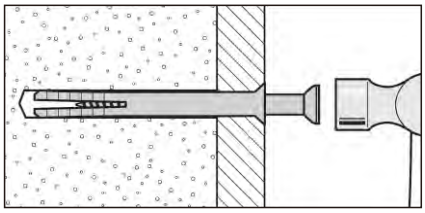

For use with walls stuck with plasterboard. The hammer fixing allows it to be fixed to the wall rather than the plasterboard. Always check the fixing is secure to the retaining wall.

No.2 "Plasterboard" wall plug

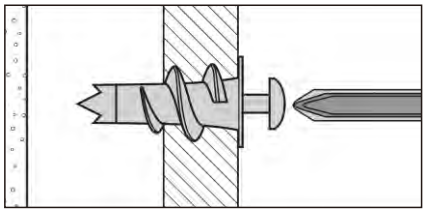

For use when attaching light loads onto plasterboard partitions.

No.4"Cavity Fixing - Heavy Duty" wall plug

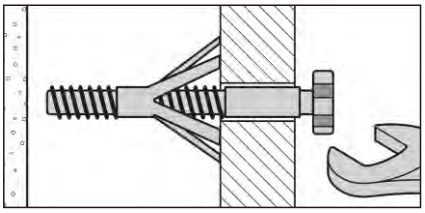

For use when fitting or supporting heavy loads such as shelving, wall cabinets and coat racks.

No.6"Shield Anchor" wall plug - heavy loads

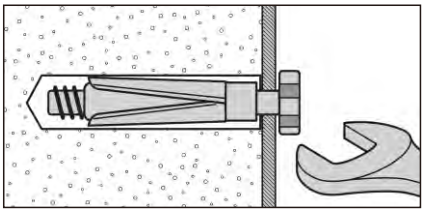

For use with heavier loads such as TV and HiFi speakers and satellite dishes etc.

⚠ Care & Maintenance

Safety: always check the fitting and location to ensure your safety in and around the home

Fitting: from time to time check the fitting to ensure the wall plugs or screws do not become loose