Model No.: 3250LA

Linear Actuator TV Lift

Dimension Drawing

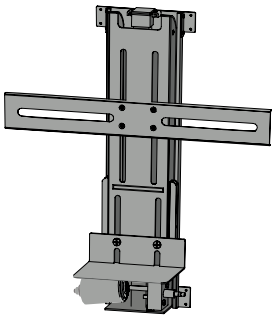

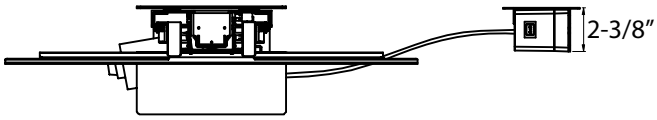

TOP VIEW

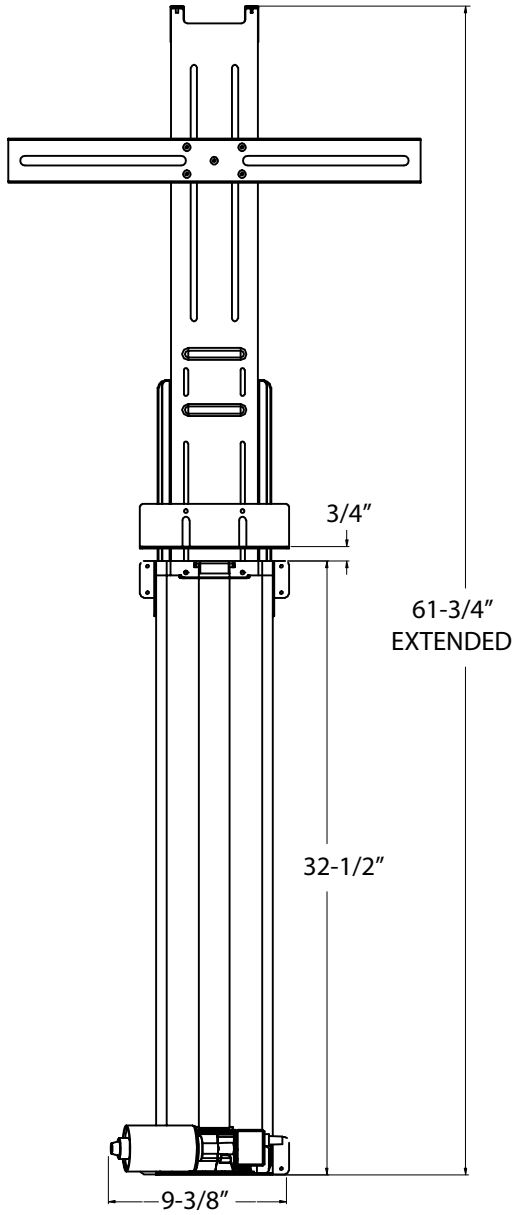

FRONT VIEW
EXTENDED

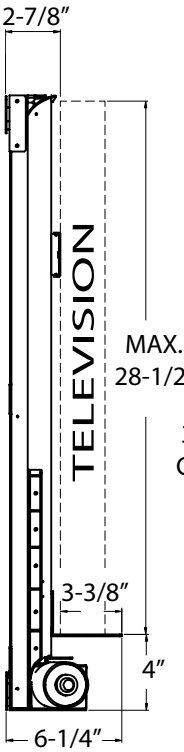

SIDE VIEW
CLOSED

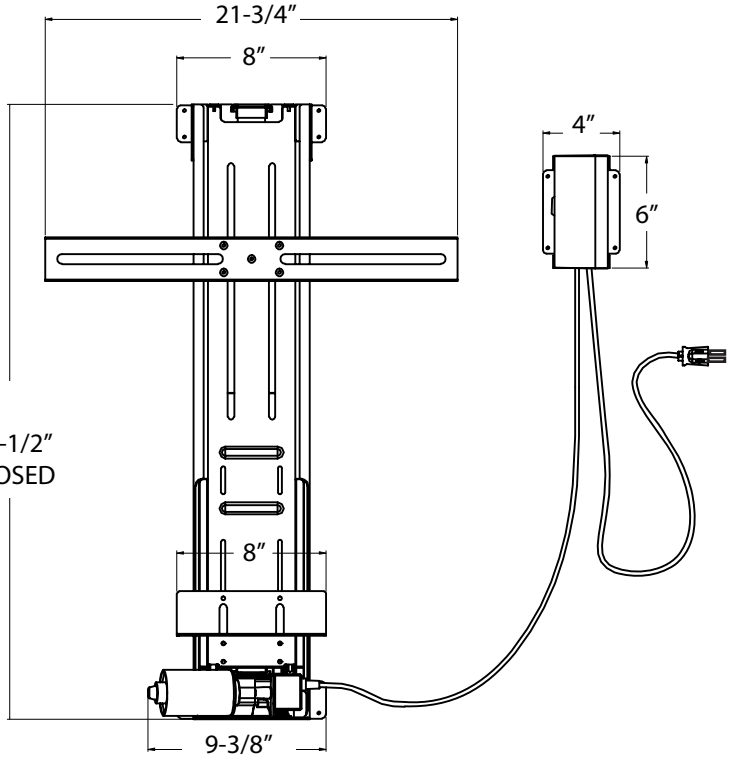

FRONT VIEW
CLOSED

© 2016 TVLiftCabinet