Thank you for purchasing!

Laura James® is registered trademark of AGTC Ltd.

Made in China for AGTC Ltd, DC8, Drift Drive, Crick, Northampton, NN6 7GZ.

Instruction

Tracy 3 Seater Corner Sofa

www.laura-james.co.uk

1707421 / 1703343

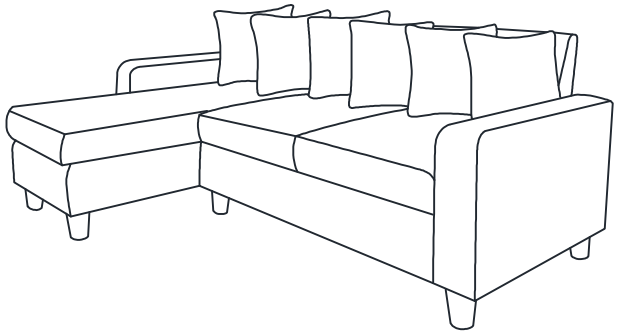

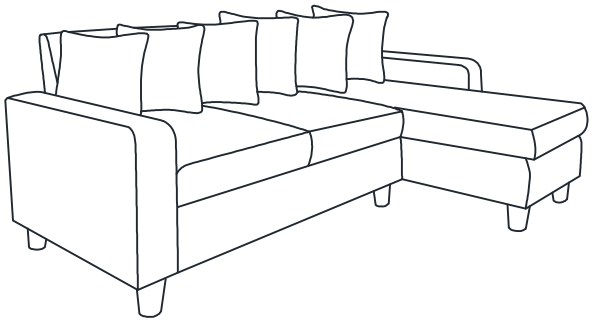

Laura James www.laura-james.co.uk

CONTENTS

Safety and care advice	1
Components	2
Assembly instructions	4
Copyright	20

IF YOU FIND A DEFFECTIVE PART

We fully stock all parts and components. Any defective part can be quickly replaced. Take note of the defective part number in manual and we will arrange a replacement.

You can email our team at customercare@laura-james.co.uk

COPYRIGHT

All material in this instruction manual is copyrighted by AGTC Ltd.
Any unauthorised use may violate worldwide copyright, trademark and other laws.

⚠ SAFETY AND CARE ADVICE ⚠

PLEASE READ THESE INSTRUCTIONS CAREFULLY AND KEEP FOR FUTURE REFERENCE

- **Warning**: Please lift with care.
- Check you have all the components and tools listed on pages 2 and 3.
- Remove all fittings from the plastic bags and separate them into their groups.
- Keep children and animals away from the work area, small parts could choke if swallowed.
- Make sure you have enough space to lay out the parts before starting.
- Do not stand or put weight on the product, this could cause damage.
- Assemble the item as close to its final position (in the same room) as possible.
- Assemble on a soft level surface to avoid damaging the unit or your floor (use opened - out unit carton).



- We do not recommend the use of power drill/drivers ***for inserting screws***, as this could damage the unit. Only use hand screwdrivers.
- Dispose of all packaging carefully and responsibly.

CARE AND MAINTENANCE

- Only clean using a damp cloth and mild detergent, do not use bleach or abrasive cleaners.
- From time to time check that there are no loose screws on this unit.

This product should not be discarded with household waste. Take to your local authority waste disposal center.

- **Note**: If required the next page can be cut out and used as reference throughout the assembly. Keep this page with these instructions for future reference.

COMPONENTS

Ensure the following components are in the box before proceeding with assembly:



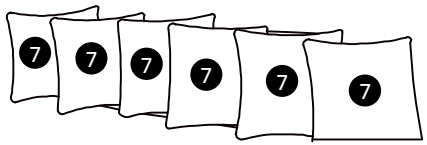

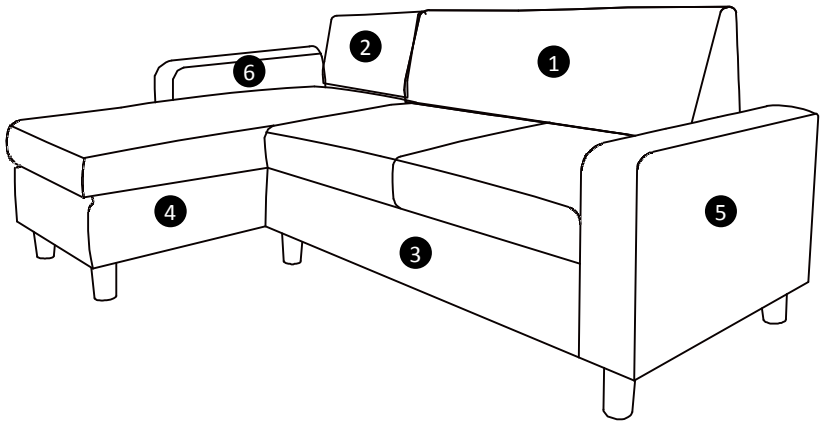

PARTS LIST

1	Sofa Backrest	x1	5	Right Arm	x1
2	Chaise Backrest	x1	6	Left Arm	x1
3	Sofa Seat	x1	7	Backrest Pillow	x6
4	Chaise Seat	X1			

ASSEMBLY INSTRUCTIONS

Step 13

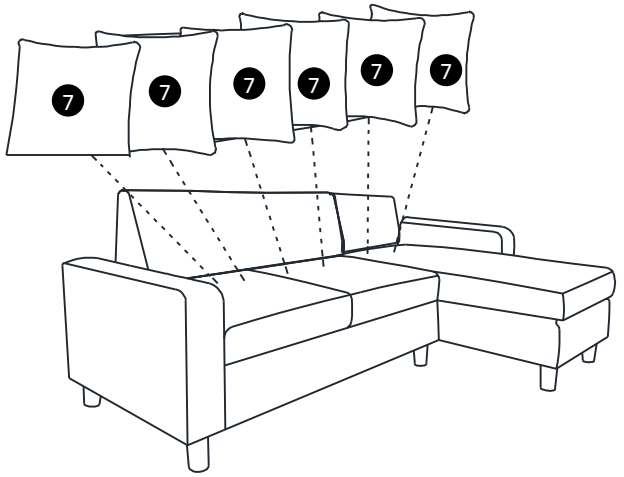

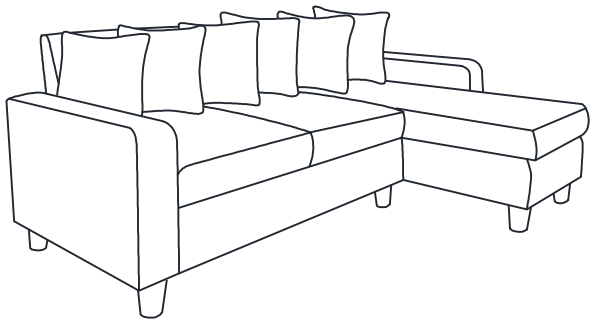

Congratulations! Now you have finished assembling the product.

ASSEMBLY INSTRUCTIONS

Step 12

B		8
C		8
D		1

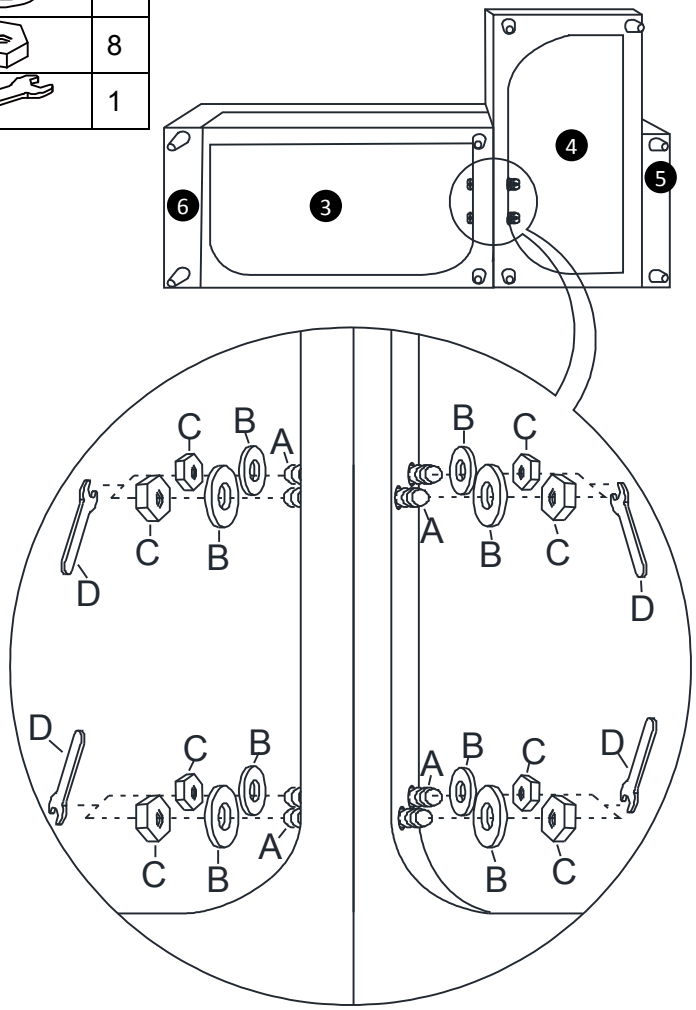

COMPONENTS — FITTINGS

Please check you have all the fittings listed below:

A		Bolt x 12
B		Washer x 16
C		Nut x 16
D		Wrench x 2
E		Foot x 9

⚠ **IMPORTANT:**

Check you have all components. Please note that some items are packed underneath Part ***3*** (Sofa Seat) and Part ***4*** (Chaise Seat).

Turn the Sofa Seat upside down and open the zipper. Inside you will find parts ***5***, ***6*** and ***7*** (x4).

Turn the Chaise Seat upside down and open the zipper. Inside you will find parts ***1***, ***2***, ***7*** (x2), ***E*** (x 9) and the remaining fitting components.

Left Chaise Sofa Group

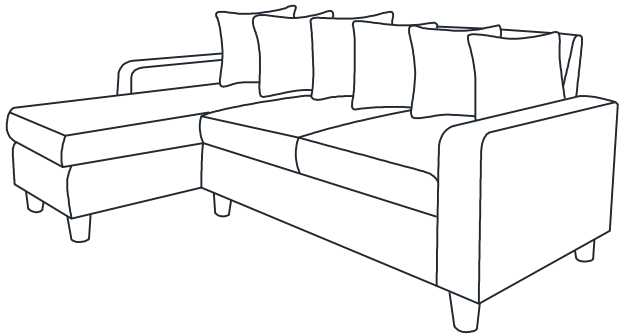

Step 1

A		8

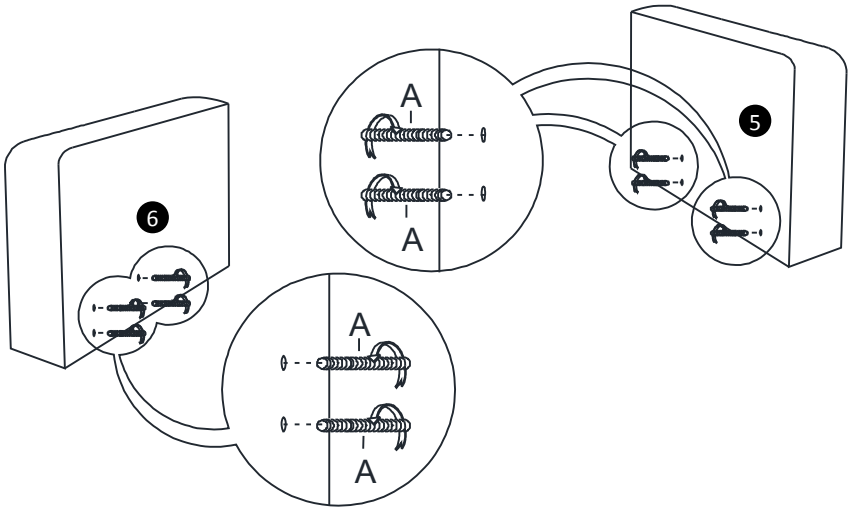

ASSEMBLY INSTRUCTIONS

Step 10

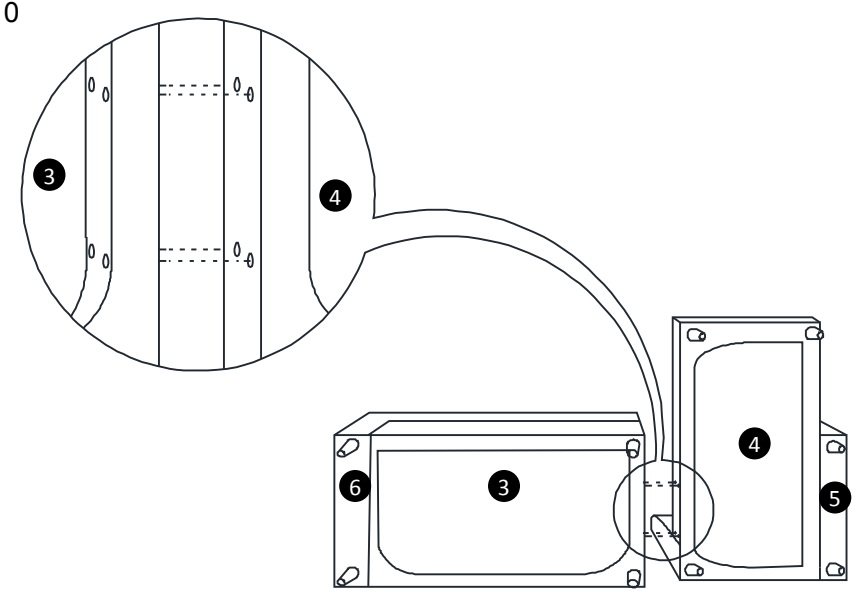

Step 11

A		4

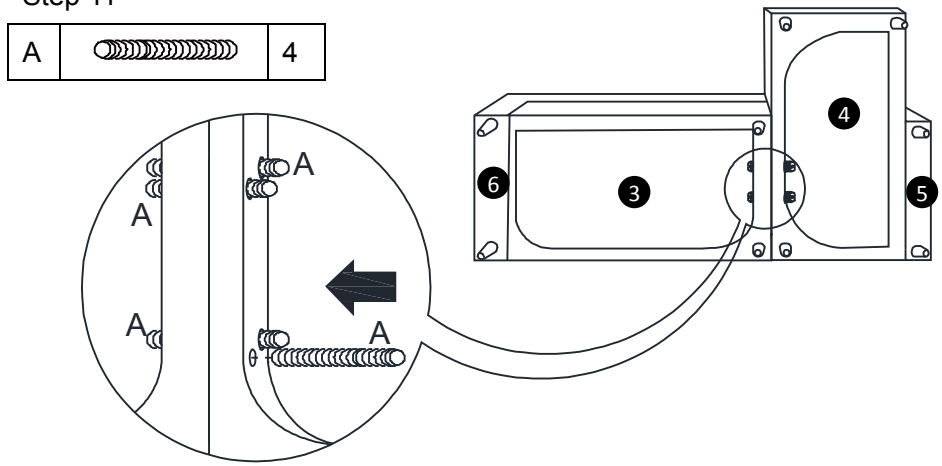

ASSEMBLY INSTRUCTIONS

Step 8

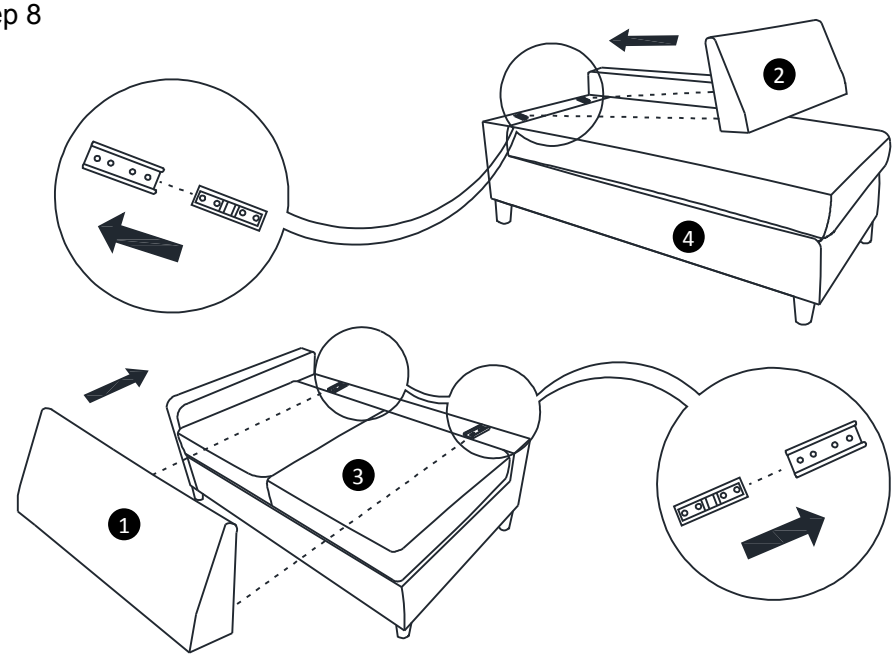

Step 9

⚠ IMPORTANT:
Position the sofa seat and chaise seat on their side as illustrated.

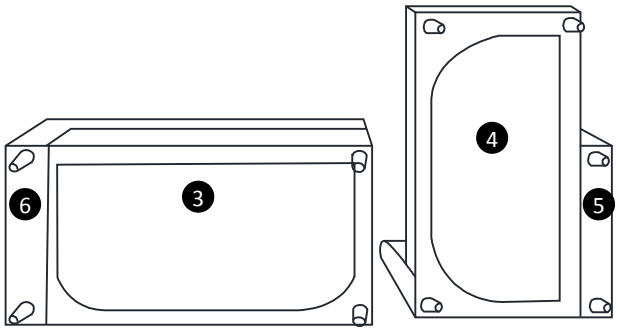

ASSEMBLY INSTRUCTIONS

Step 2

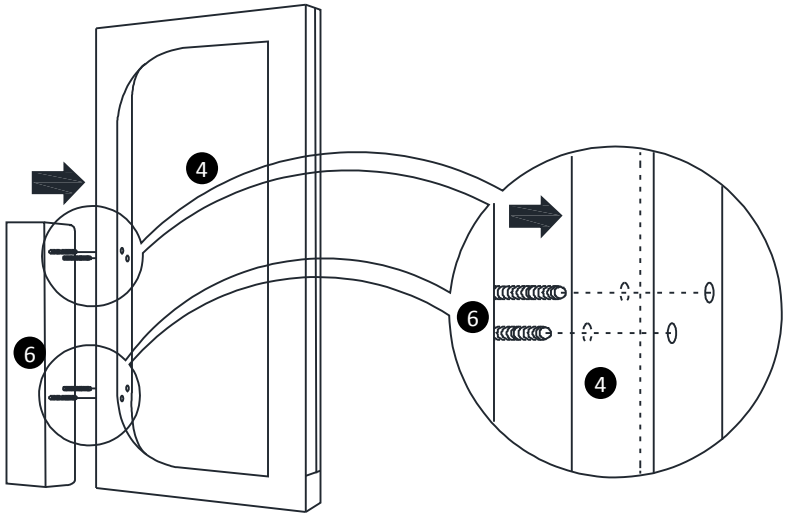

Step 3

B		4
C		4
D		1

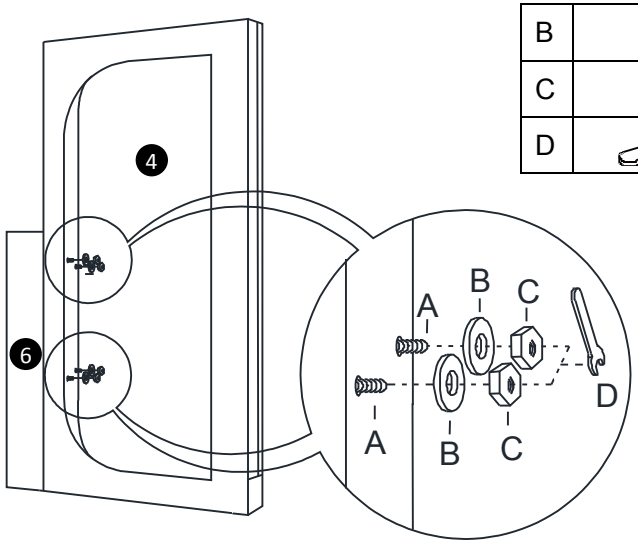

ASSEMBLY INSTRUCTIONS

Step 4

E		5

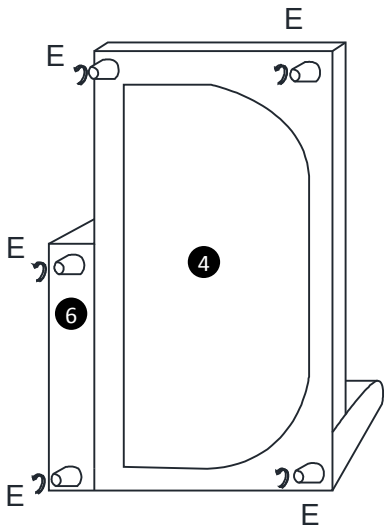

Step 5

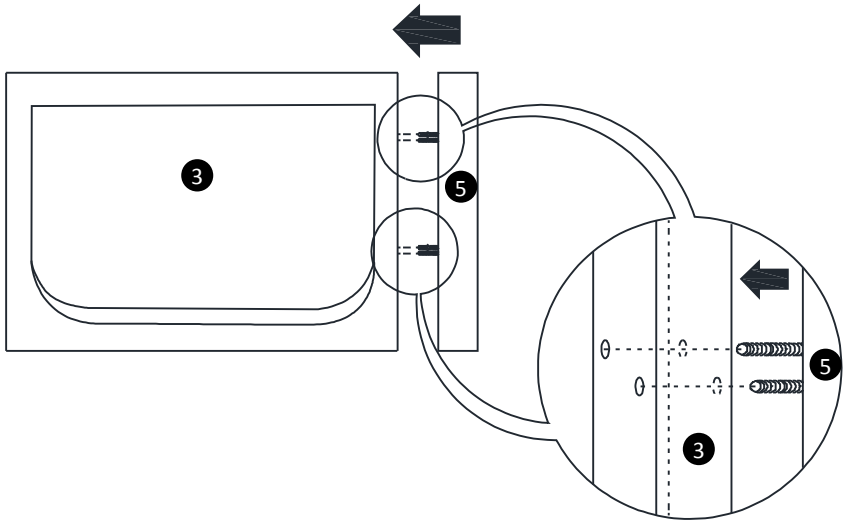

ASSEMBLY INSTRUCTIONS

Step 6

B		4
C		4
D		1

Step 7

E		4

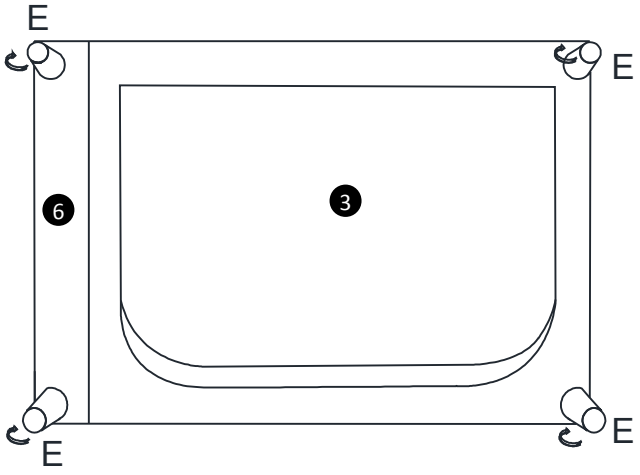

ASSEMBLY INSTRUCTIONS

Step 4

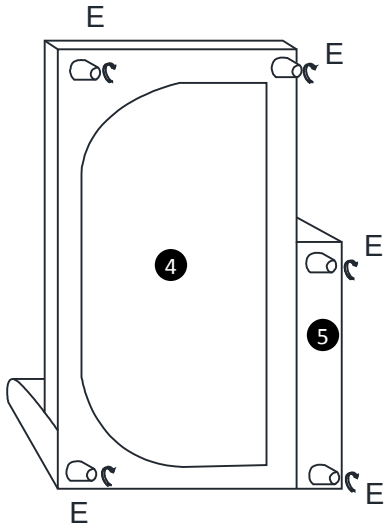

E		5

Step 5

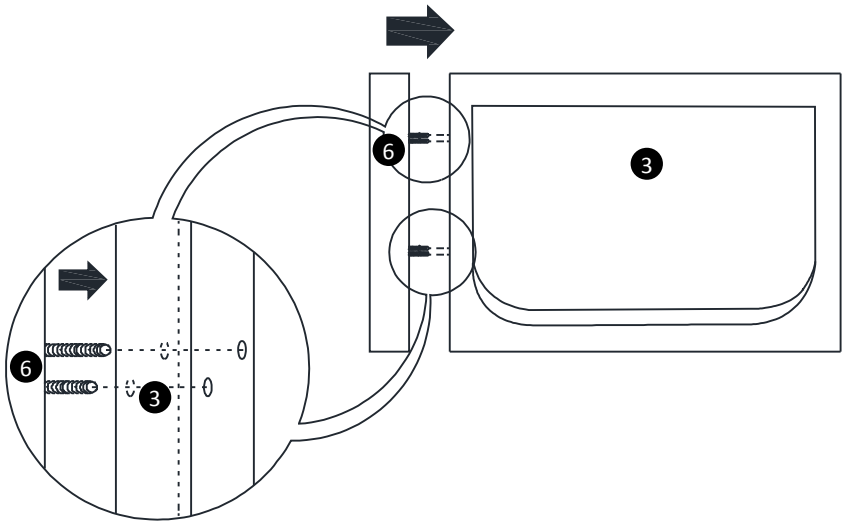

ASSEMBLY INSTRUCTIONS

Step 6

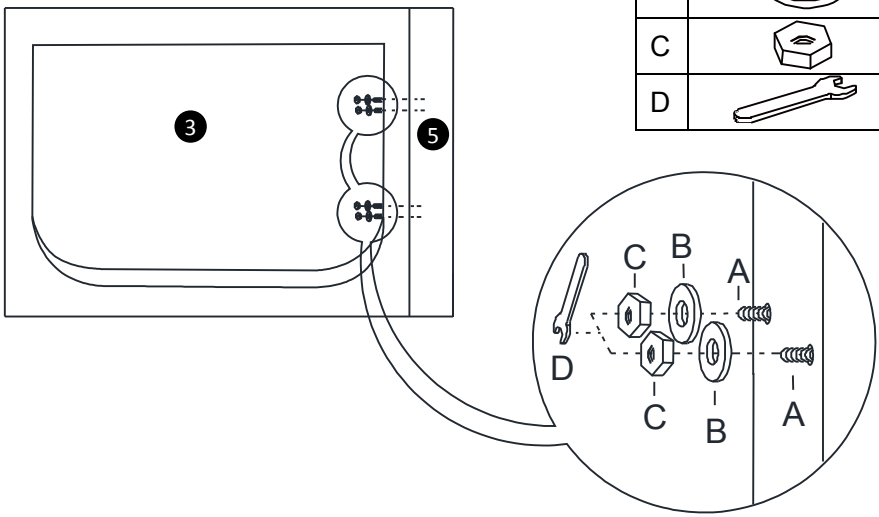

B		4
C		4
D		1

Step 7

E		4

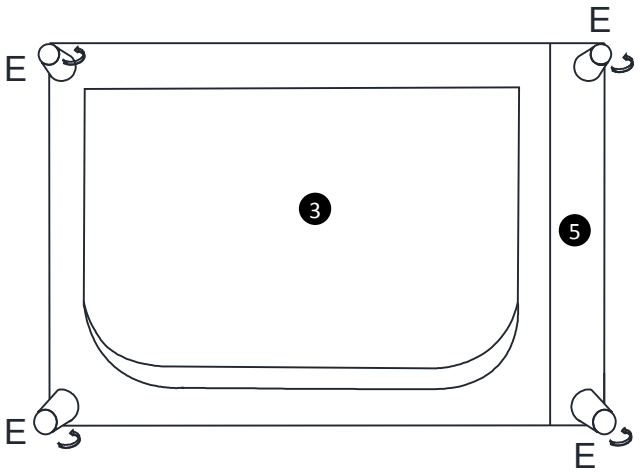

ASSEMBLY INSTRUCTIONS

Step 8

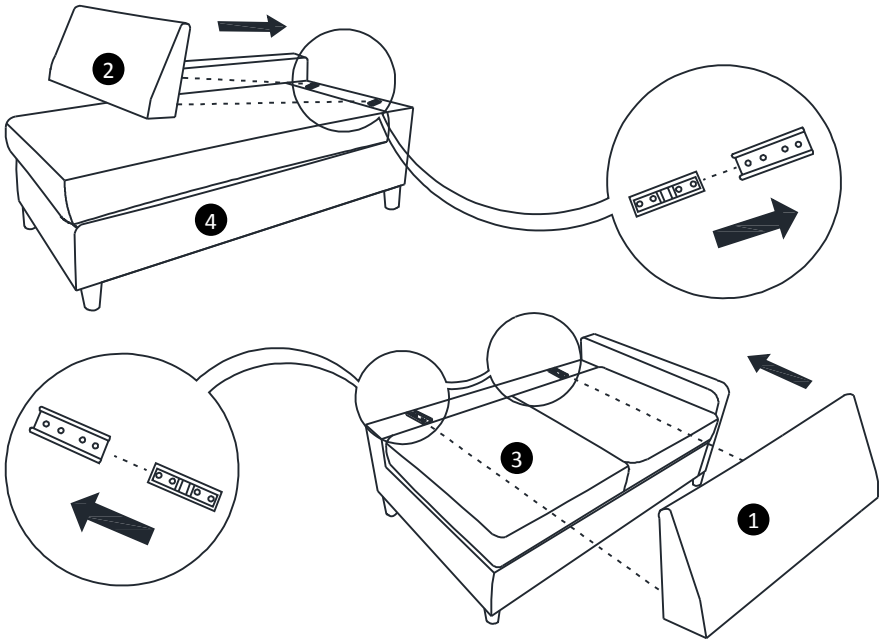

Step 9

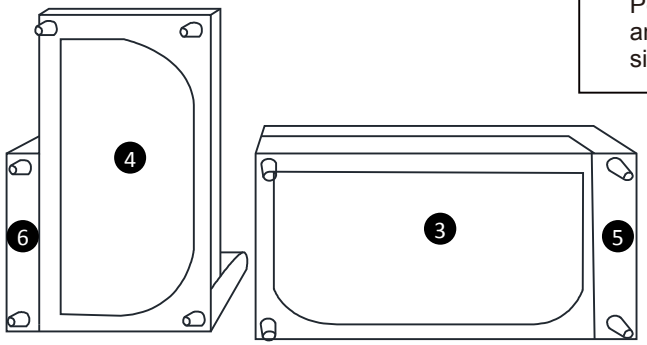

⚠ IMPORTANT:
Position the sofa seat and chaise seat on their side as illustrated.

ASSEMBLY INSTRUCTIONS

Step 2

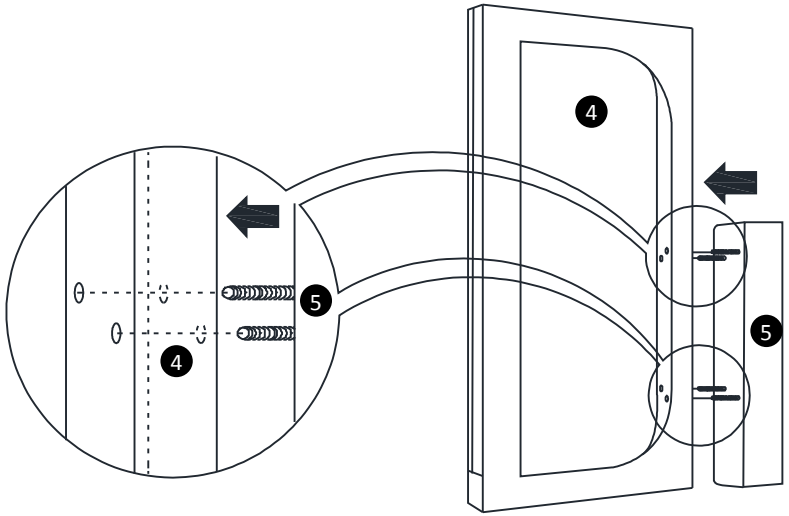

Step 3

B		4
C		4
D		1

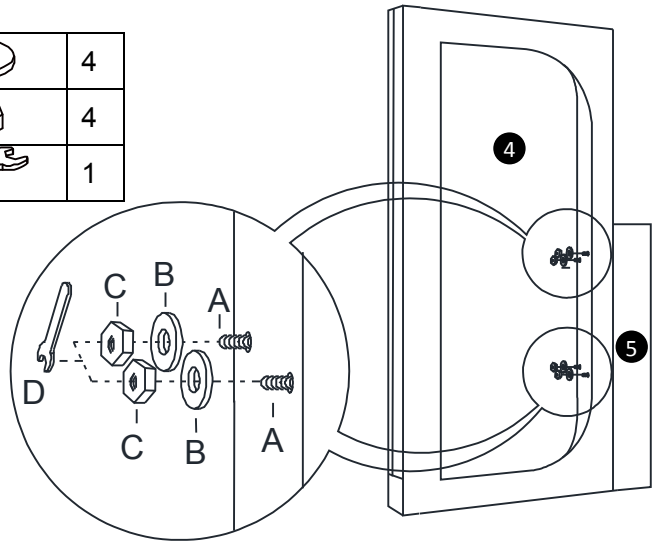

Right Chaise Sofa Group

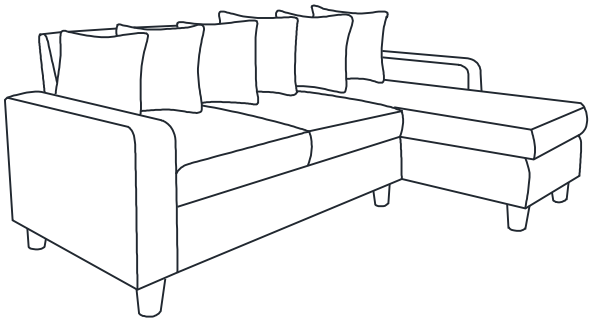

Step 1

A		8

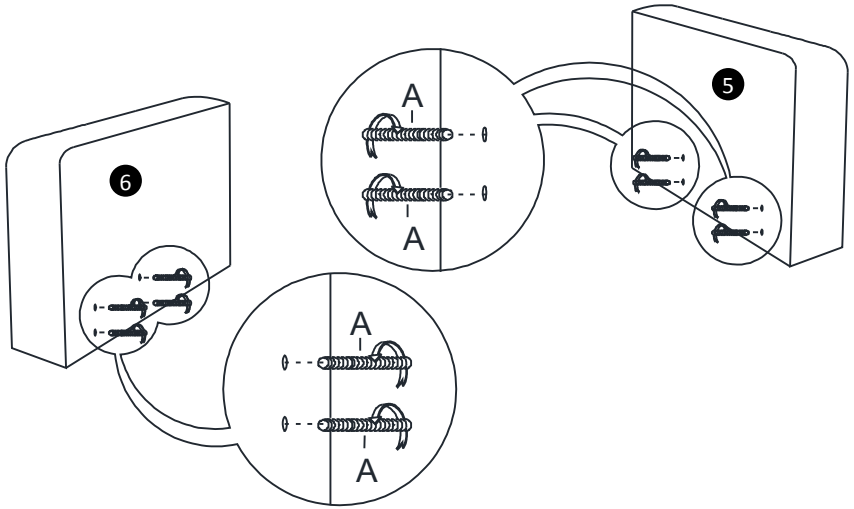

ASSEMBLY INSTRUCTIONS

Step 10

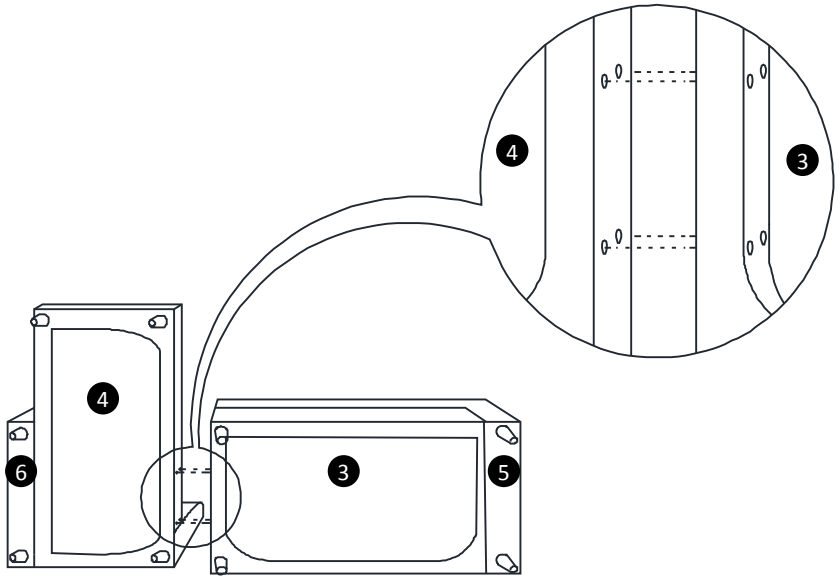

Step 11

A		4

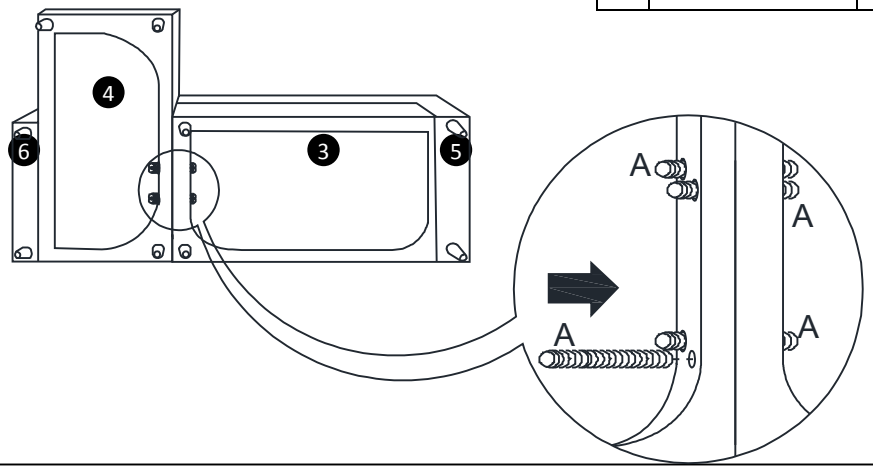

Step 12

B		8
C		8
D		1

Step 13

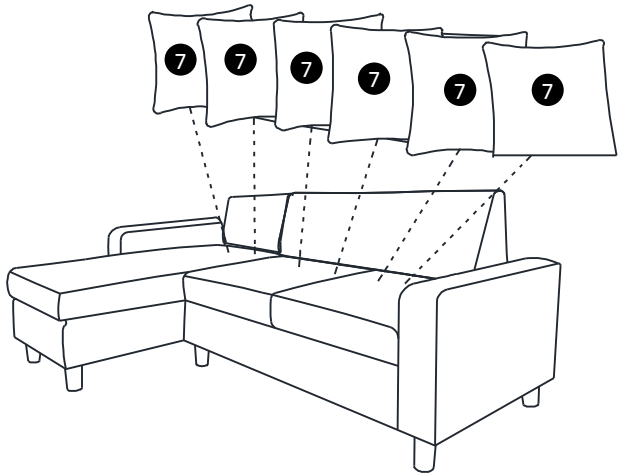

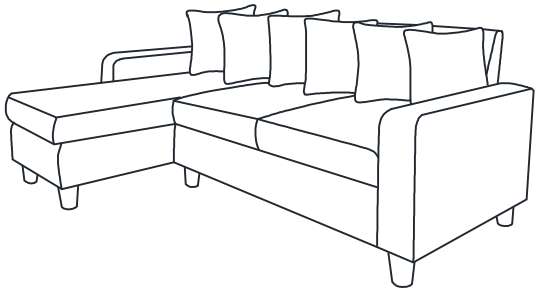

Congratulations! Now you have finished assembling the product.