014-HG-42026
Westmont 2 Door Sideboard

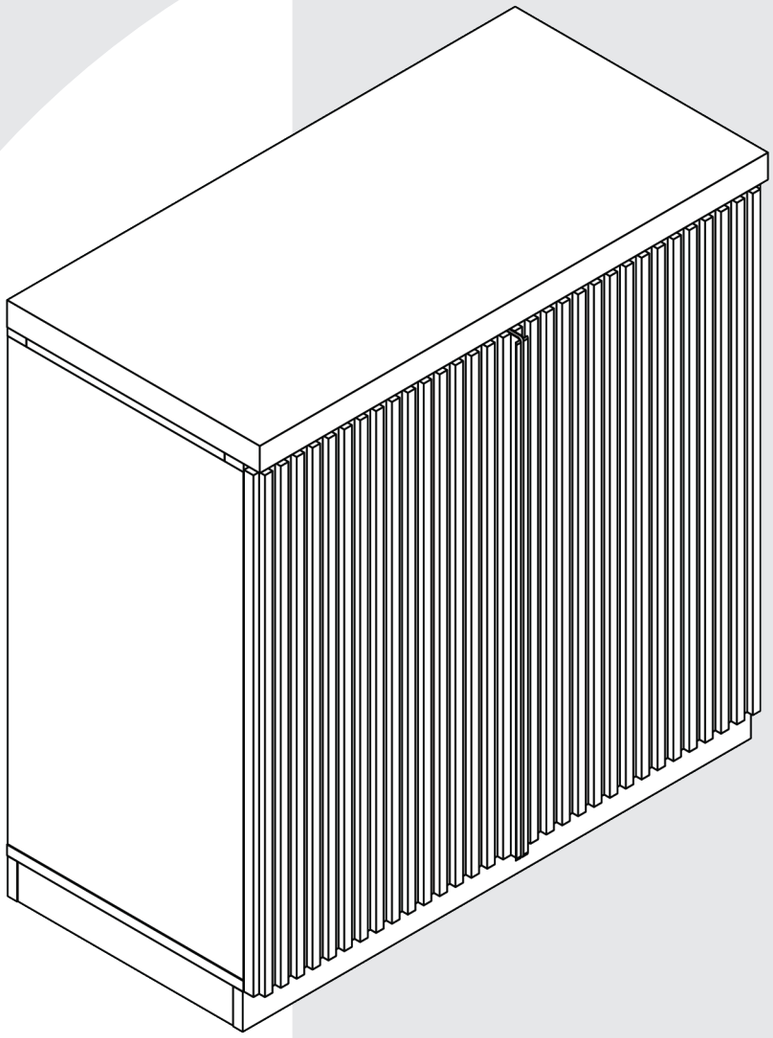

Belleze®

Instruction Manual

Scan to view
online tutorial
or visit
www.belleze.com

Read Before Assembly

The instruction booklet contains **IMPORTANT** safety information.
Please read it in full and keep it for future reference.

WARNING!

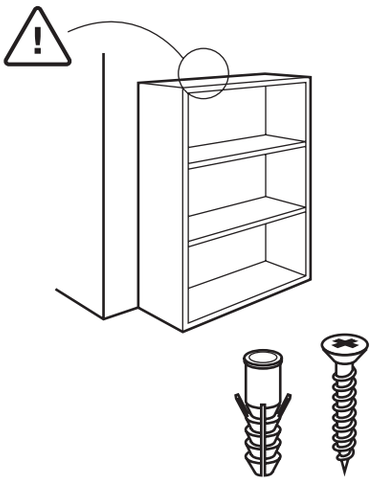

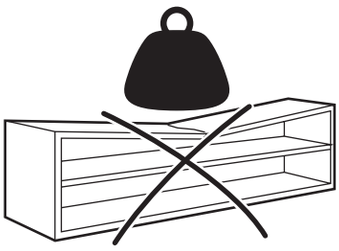

- Serious or fatal crushing injuries may occur if the furniture tip-over. Furniture must permanently affixed to the wall with anti-tipping device(s) in order to prevent the furniture from tipping over.
- Different wall materials requires different type of wall anchors or screws. Use a suitable wall anchors or screws for your specific wall in order to secure the stability and load bearing capacity of the furniture. If you are uncertain about which type of device to use, please contact us or a local hardware store and seek professional advice.

- Only place items that is within the recommended size and weight limit of the furniture.
- Items placed onto the furniture must be resting on a support surface without hanging over the edges.

- Climbing on, stepping on, or placing overweighted objects on the product may cause property damage and / or injuries.

CAUTION!

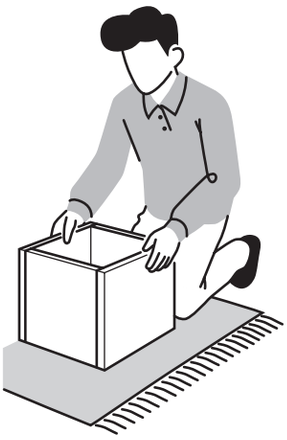

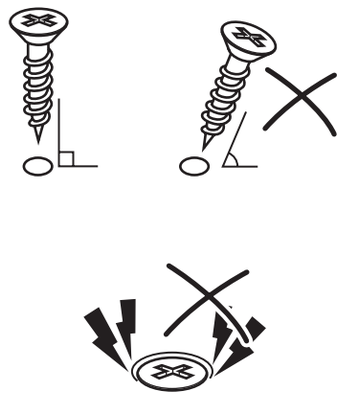

- Assemble the furniture on an empty carton, carpet, or rug to prevent scratches or damages.
- When assembling the furniture, keep pets and children away from the assembly area.
- Ensure the product is fully assembled before use. If you are missing any hardware or parts, do not use it until you have restored the missing parts.
- This furniture requires 2 people for assembly.
- Lay out all components and hardware separately on a flat surface and make sure that no parts are missing or damaged before assembly. Do not destroy or discard any packaging until you are certain that you have all the necessary parts for assembly.
- There are small components used in the construction of the furnitures. Loose items, plastic bags, and packaging films should be kept away from pets or children to avoid chocking hazard or suffocations.
- Read this instruction manual prior to assembly and familiarize yourself with the various steps.
- Install all hardwares perpendicular to the opening unless otherwise specified.
- Hand tight all hardwares and careful not to over-tighten to avoid damaging the product.

Assembly Symbols

- Follow sequential order.
- Build specified number of parts.
- Flip part as indicated.
- Rotate part as indicated.
- Choose your own assembly options.
- Pay attention to the part orientation.
- Leave bolts or screws partially tighten.
- Fully tighten bolts or screws.
- Level the furniture on the ground.

Estimated Time for Assembly

90 mins

Weight Capacity Limitations are as Follows:

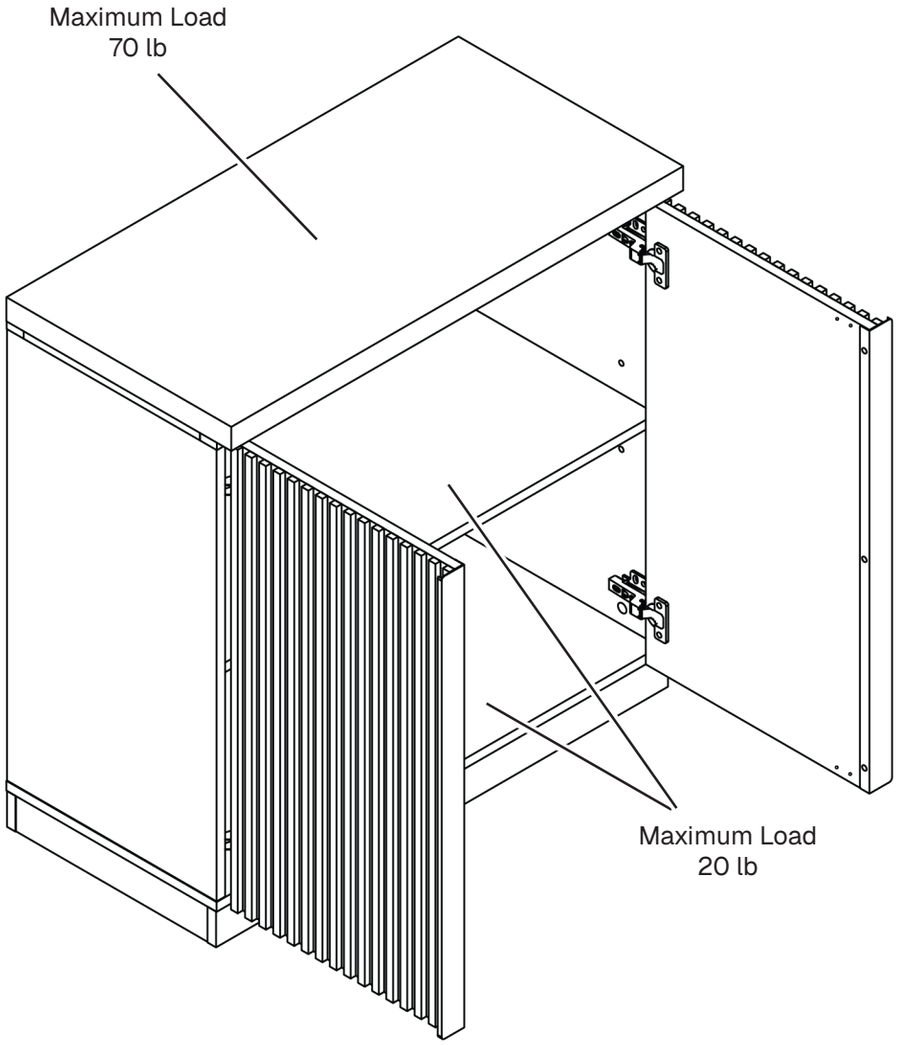

Tools Needed

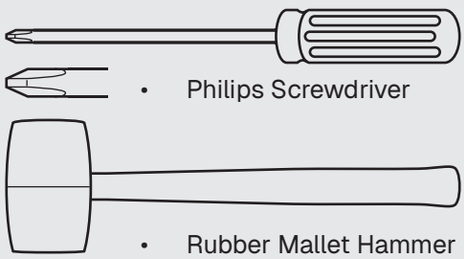

- Philips Screwdriver
- Rubber Mallet Hammer

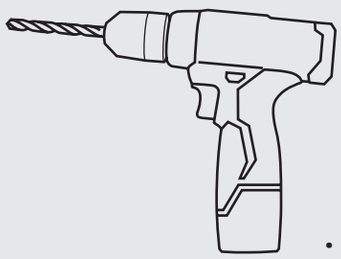

- Electric Drill

Package Contents

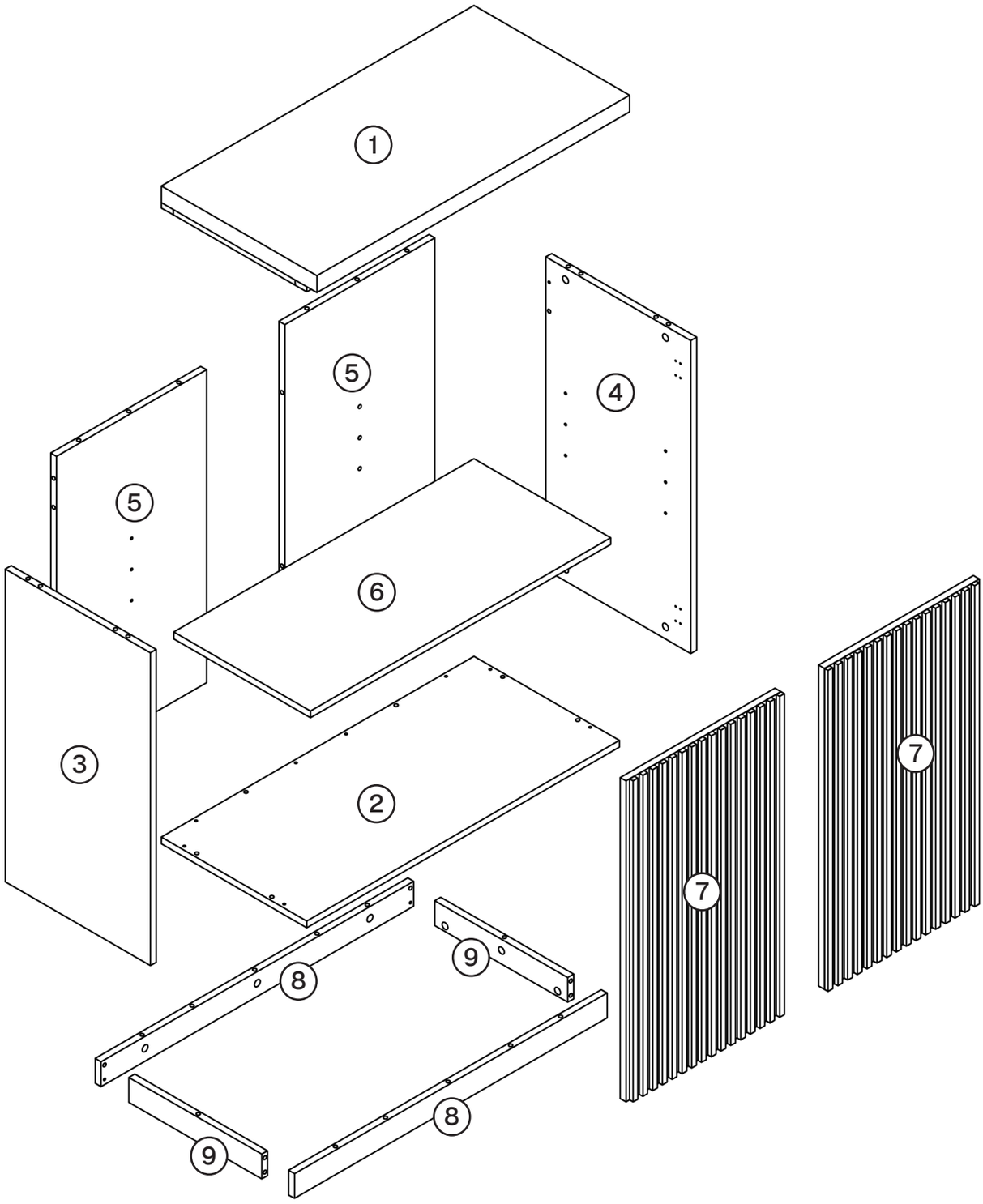

Package Contents

CODE	DESCRIPTION	QTY
1	Top Panel	1
2	Bottom Panel	1
3	Left Lateral Panel	1
4	Right Lateral Panel	1
5	Back Panel	2
6	Shelf Panel	1
7	Cabinet Door	2
8	Long Base Strip	2
9	Short Base Strip	2

Package Contents

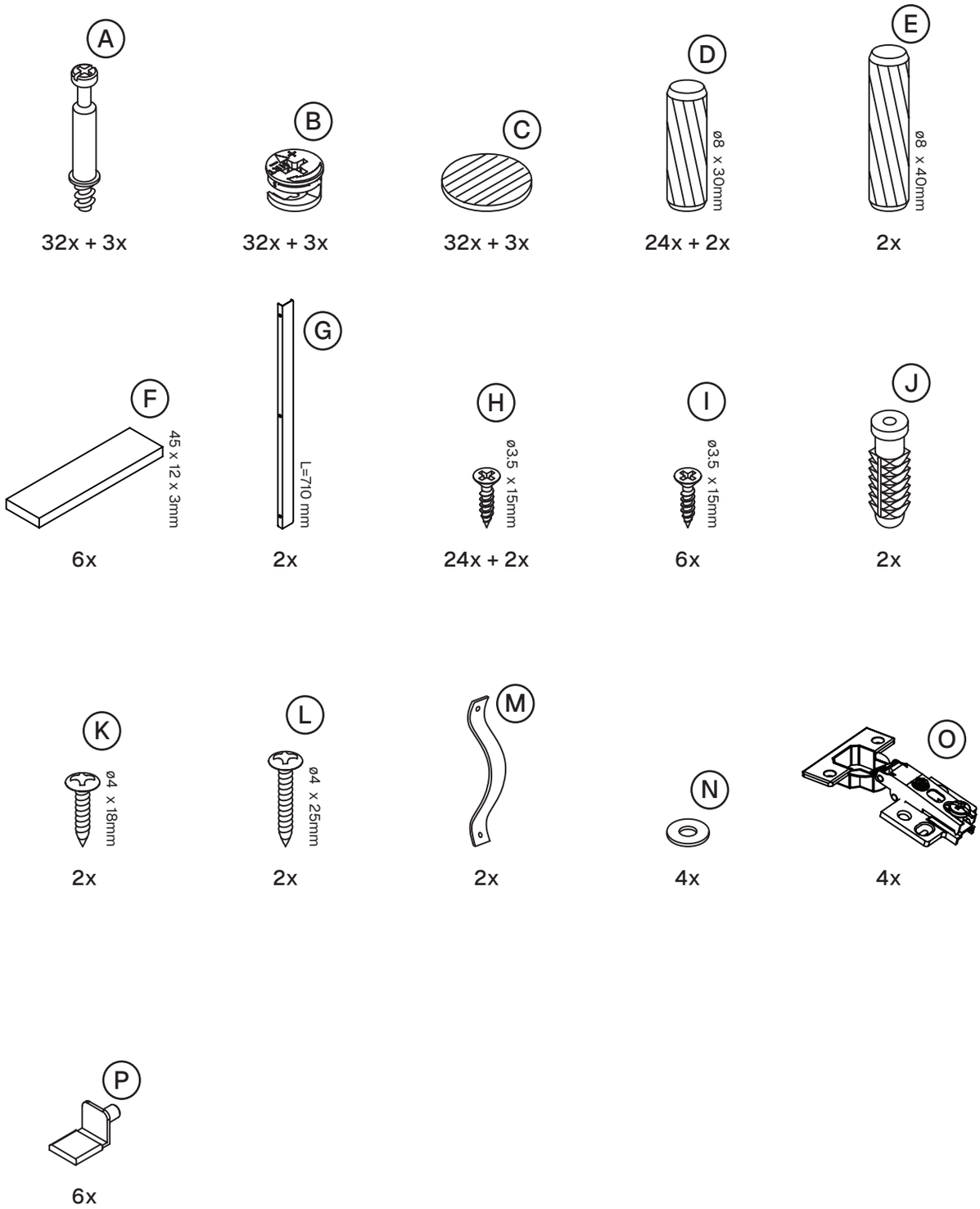

01 Top panel

A | 8x

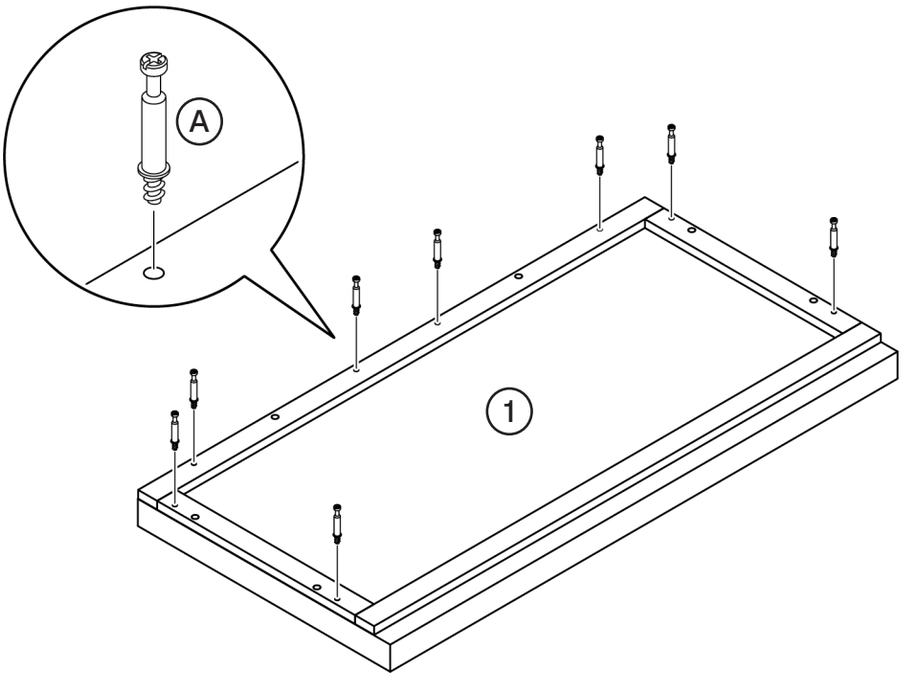

02 Bottom panel

A | 8x

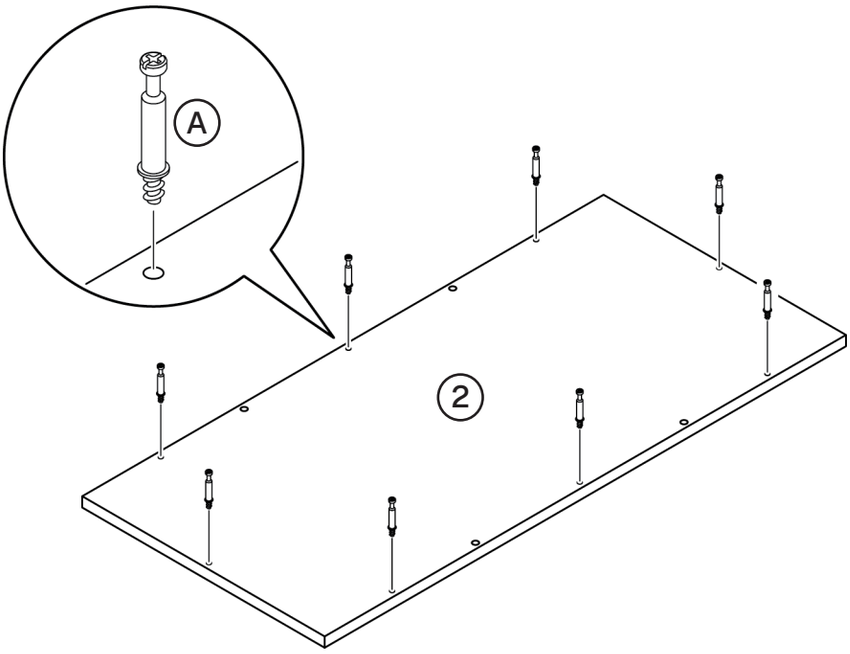

03 Long base strips

A | 4x

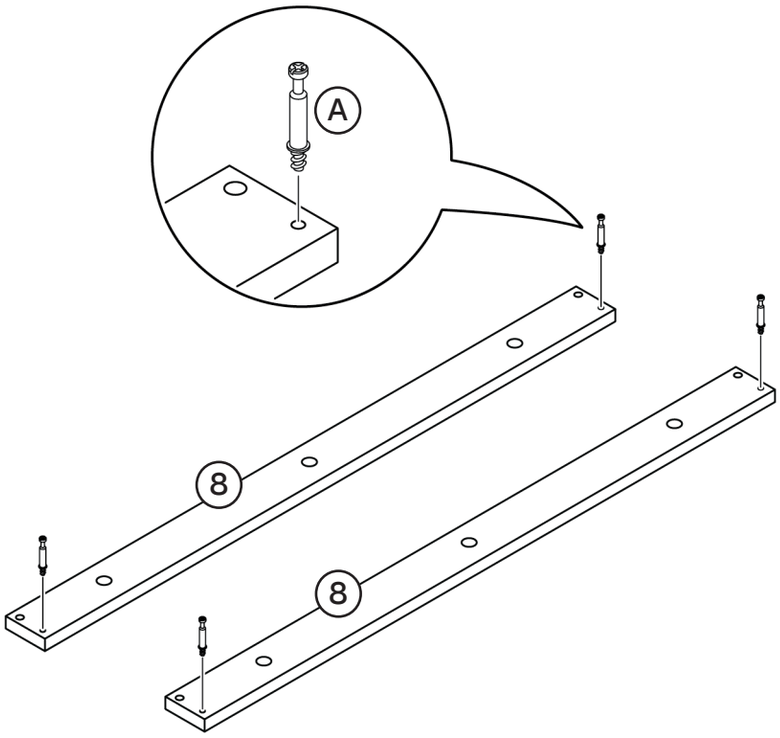

04 Long base strips

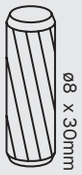

D | 4x

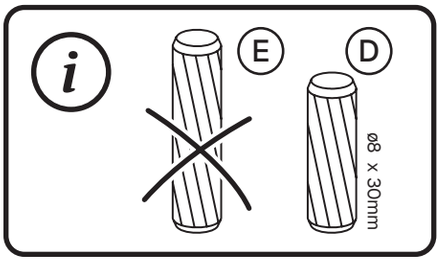

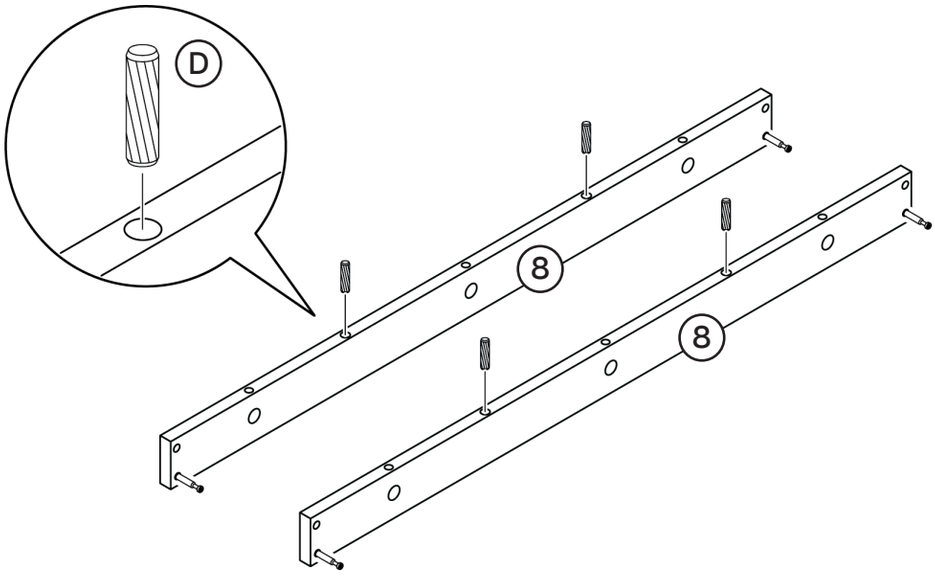

©Belleze

05 Short base strips

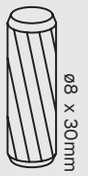

D | 4x

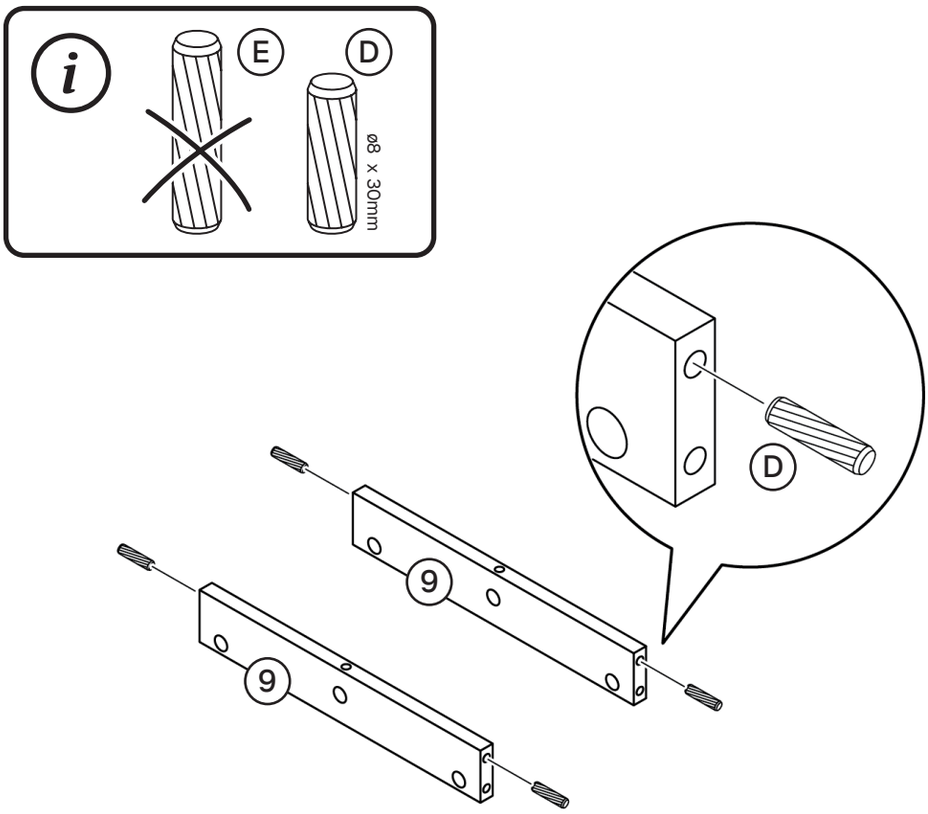

06 Assemble the base strips

B | 4x

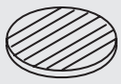

C | 4x

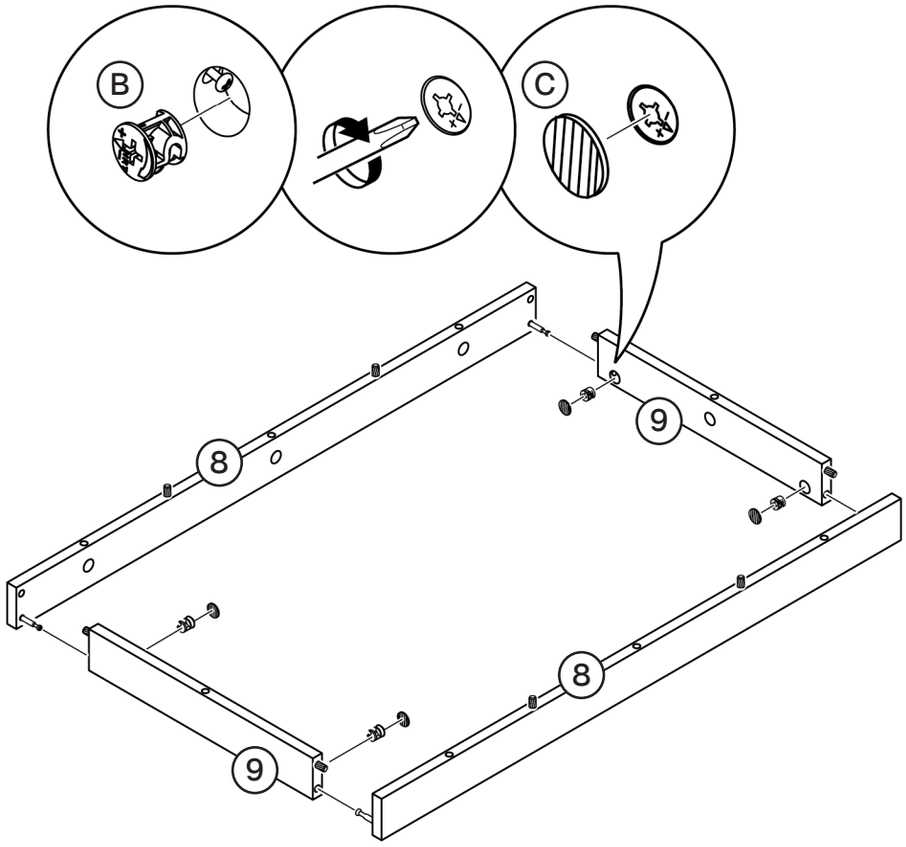

07 Attaching base strips to bottom panel

B | 8x

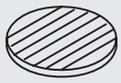

C | 8x

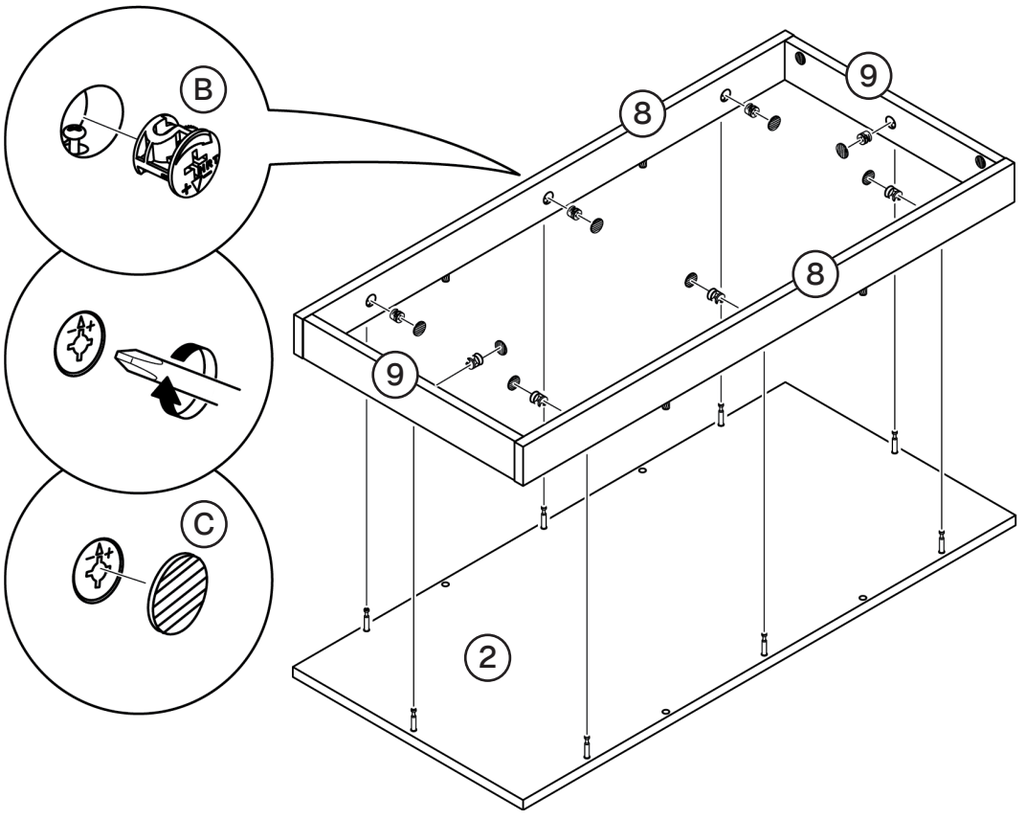

08 Attaching leg pads

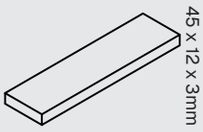

F | 6x

★ Note: Tear adhesive tape apart.

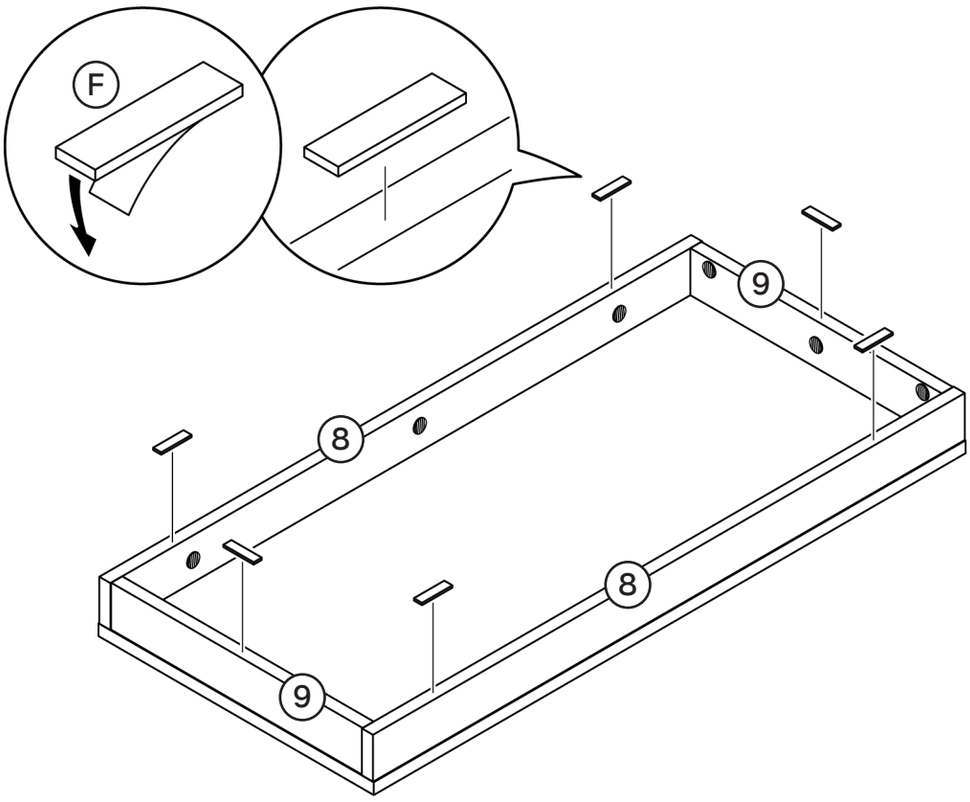

09 Base

A | 8x

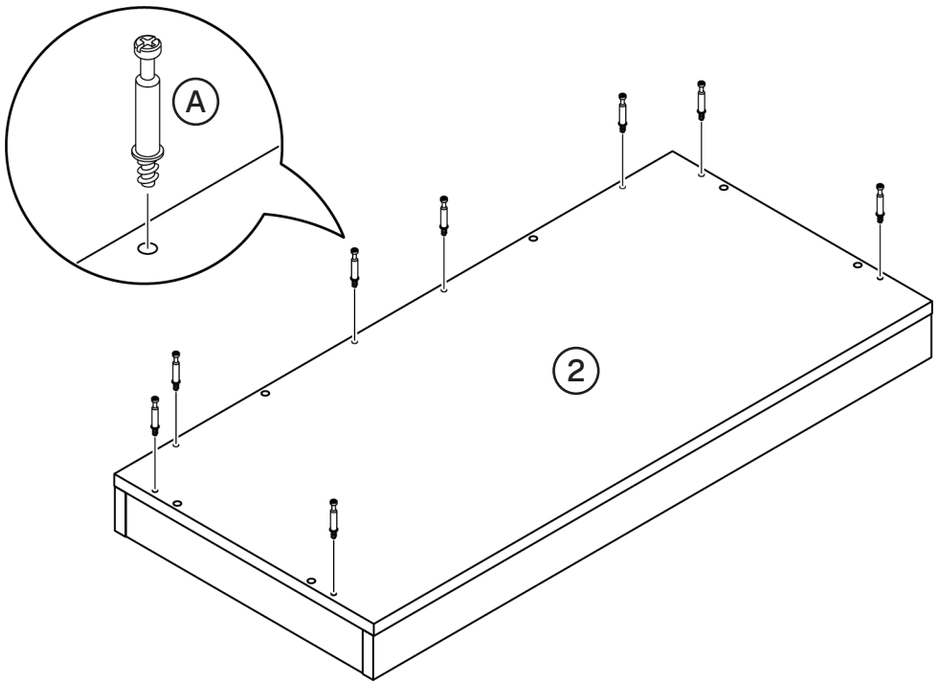

10 Back panels

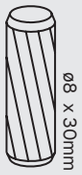

D | 8x

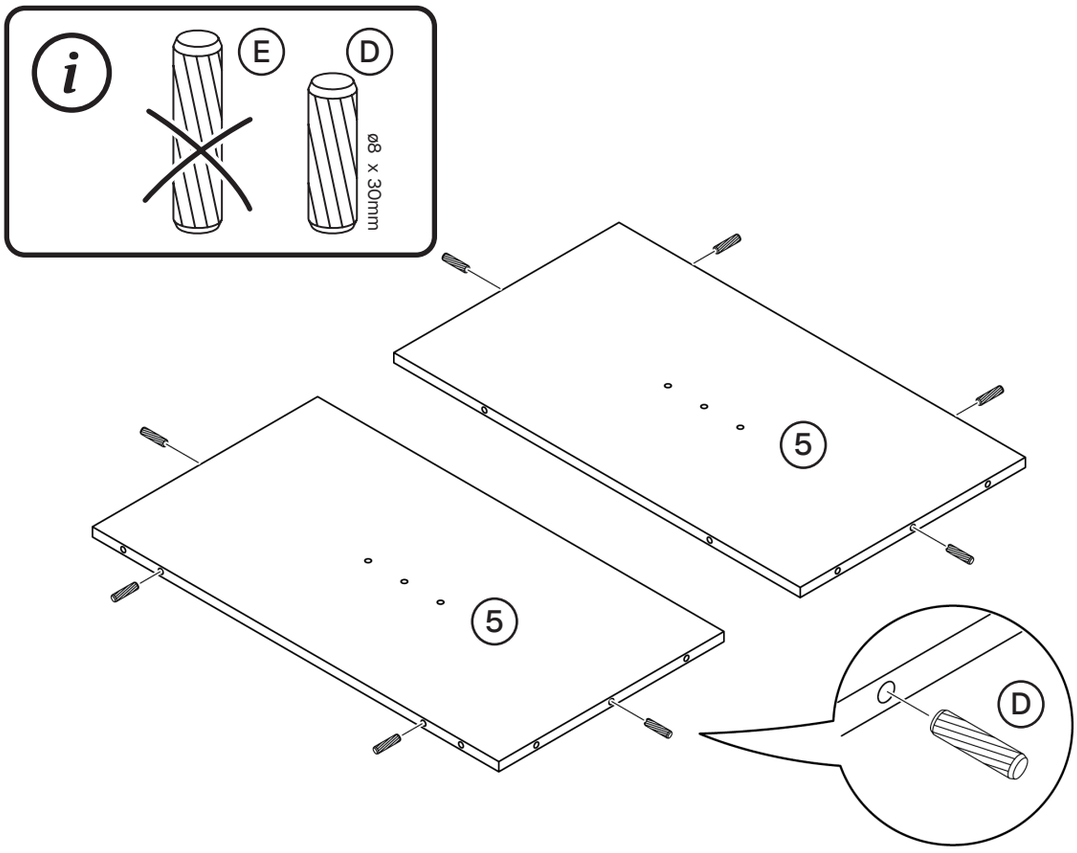

11 Lateral panels

A | 4x

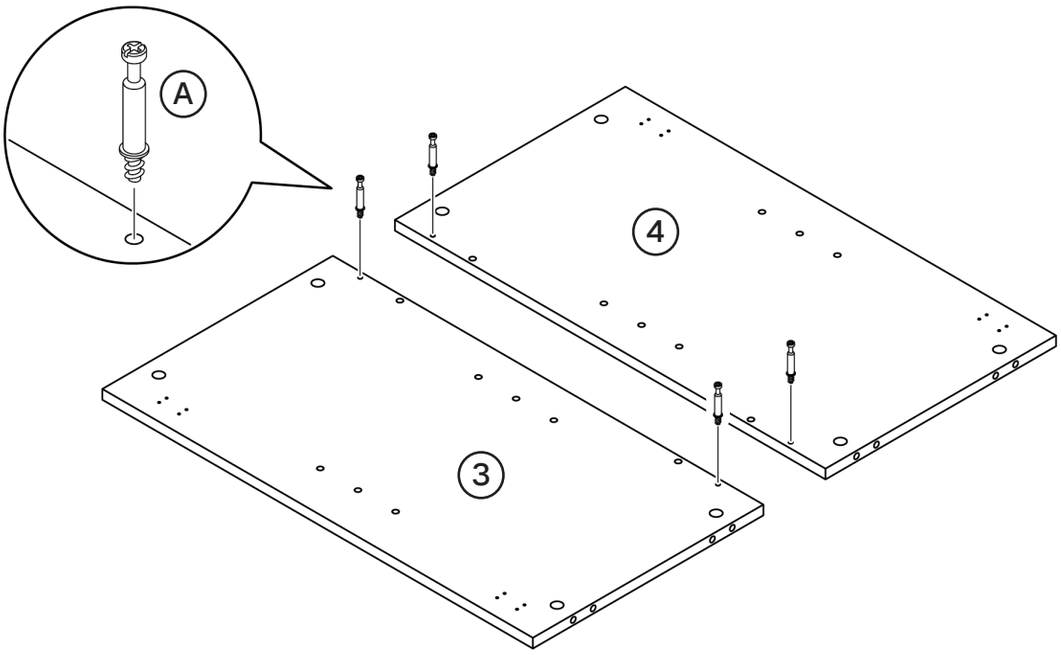

12 Lateral panels

D | 8x

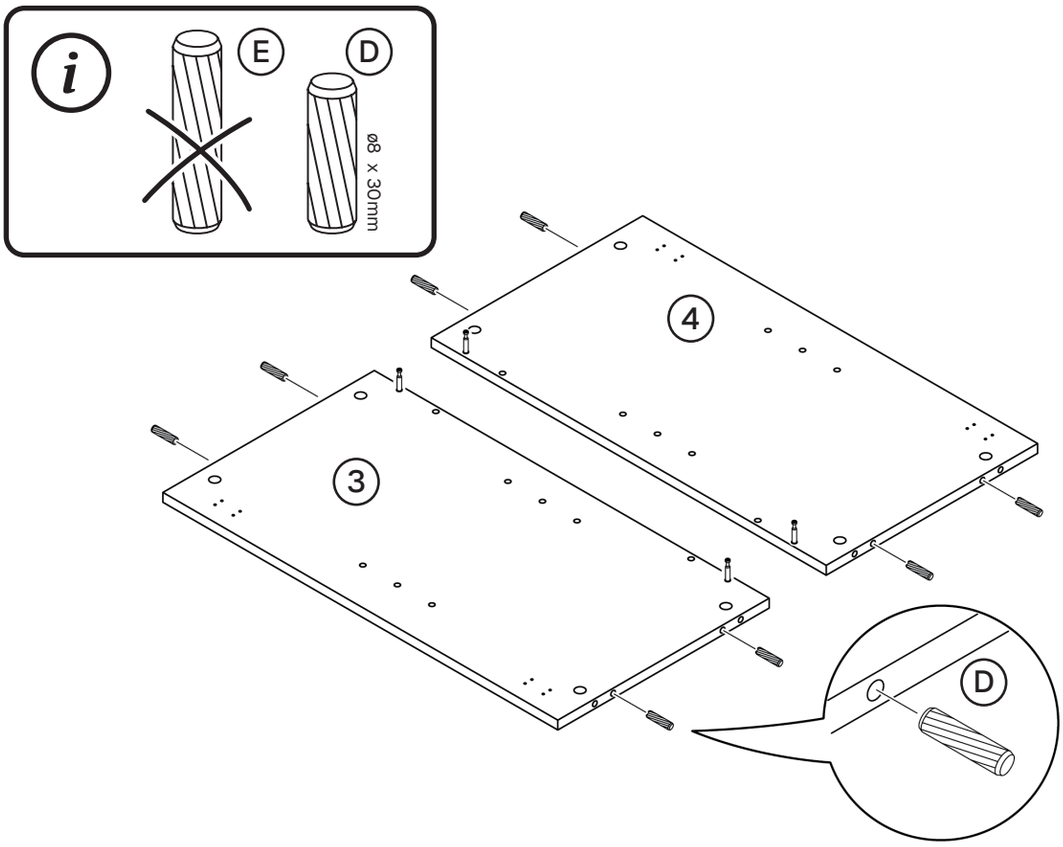

13 Assemble back panels to lateral panels

B | 4x

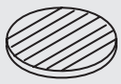

C | 4x

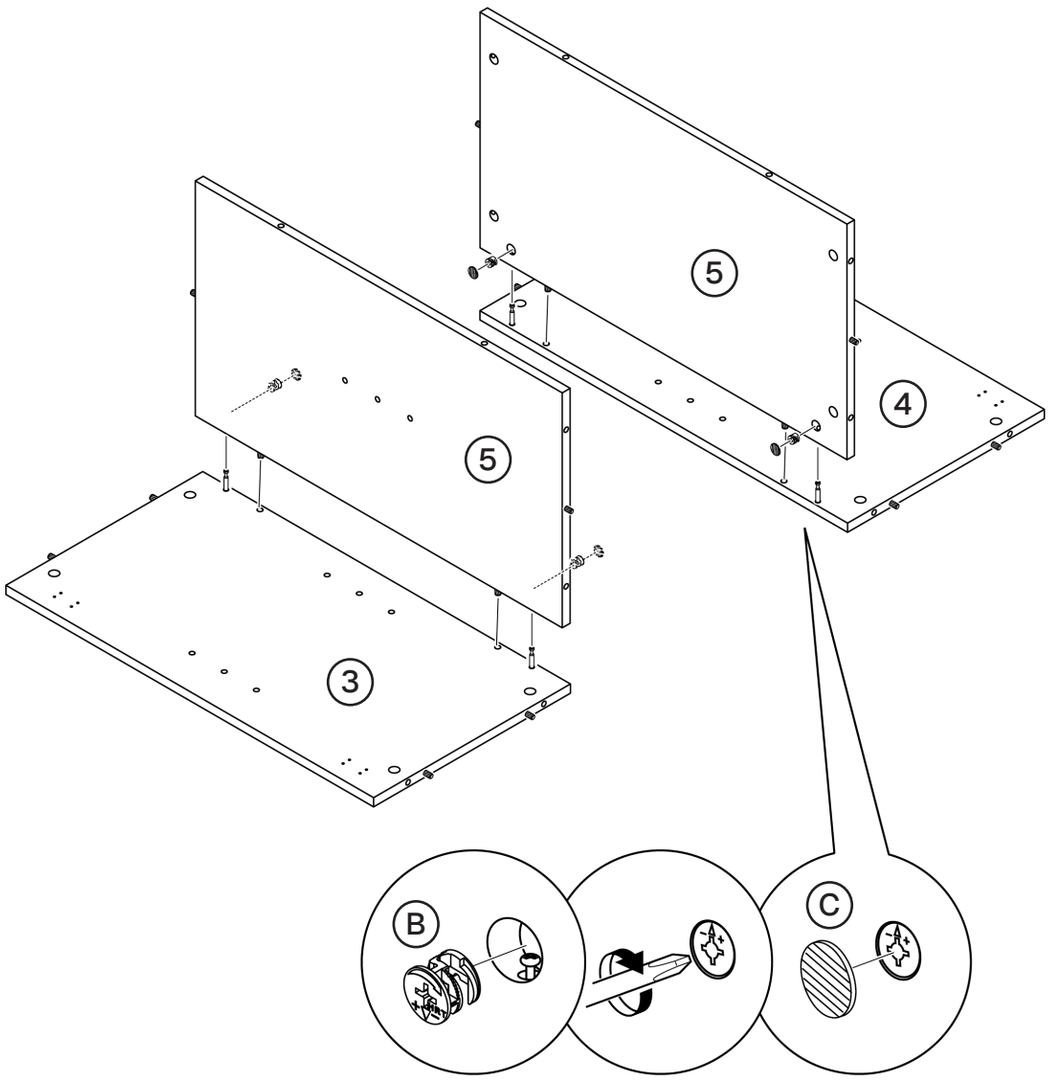

14 Connecting lateral panels

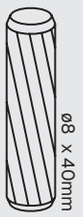

E | 2x

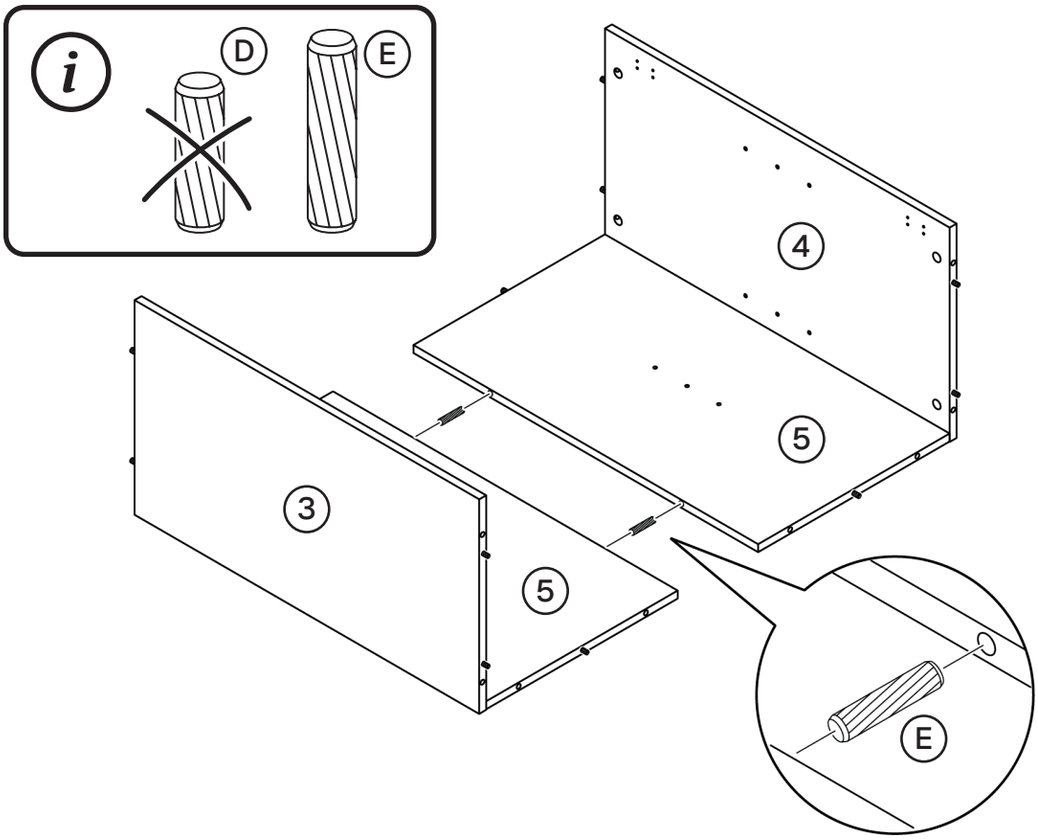

15 Assembling lateral panels to base

B | 4x

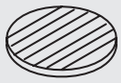

C | 4x

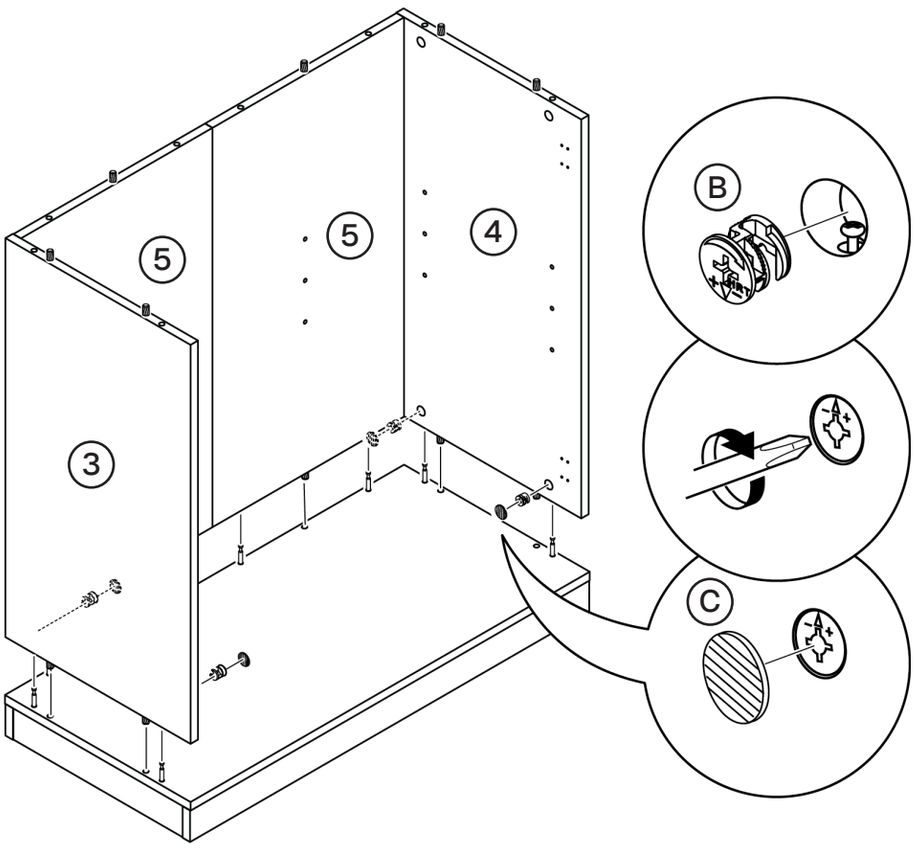

 ©Belleze

16 Attaching top panel

B 4x

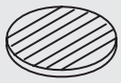

C 4x

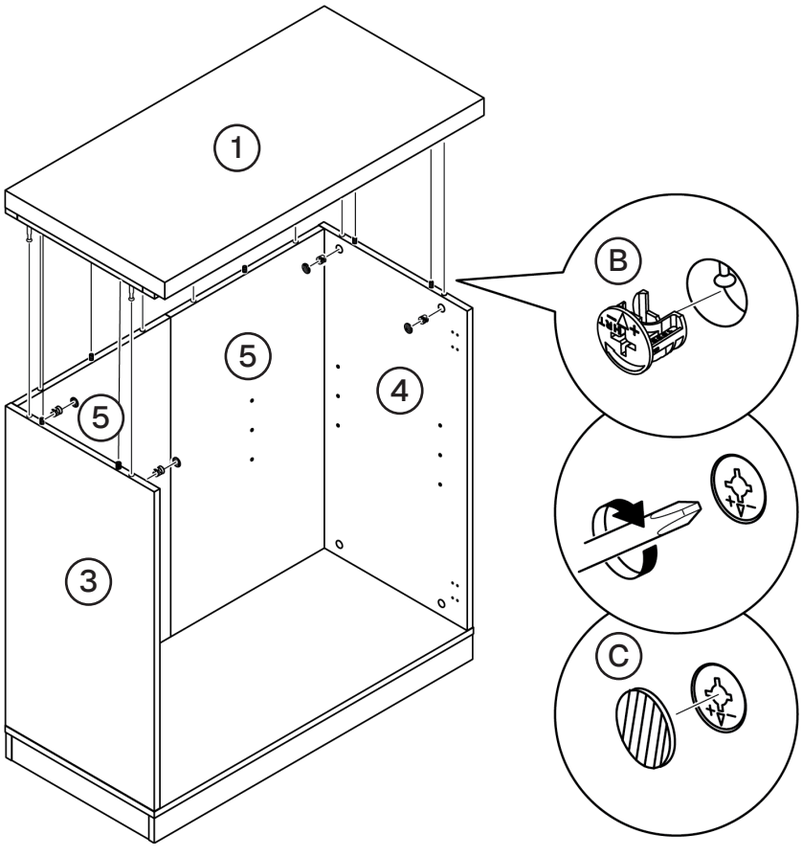

17 Secure top panel and base to back panels

B 8x

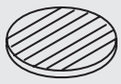

C 8x

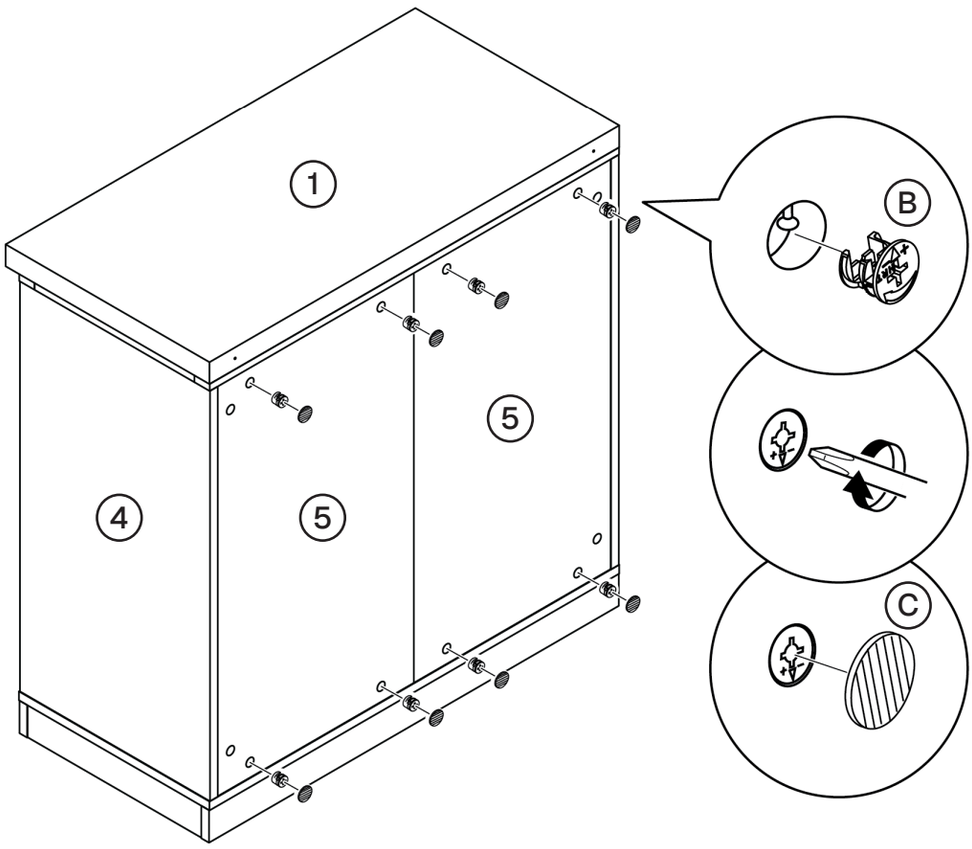

18 Inserting shelf pegs

P | 6x

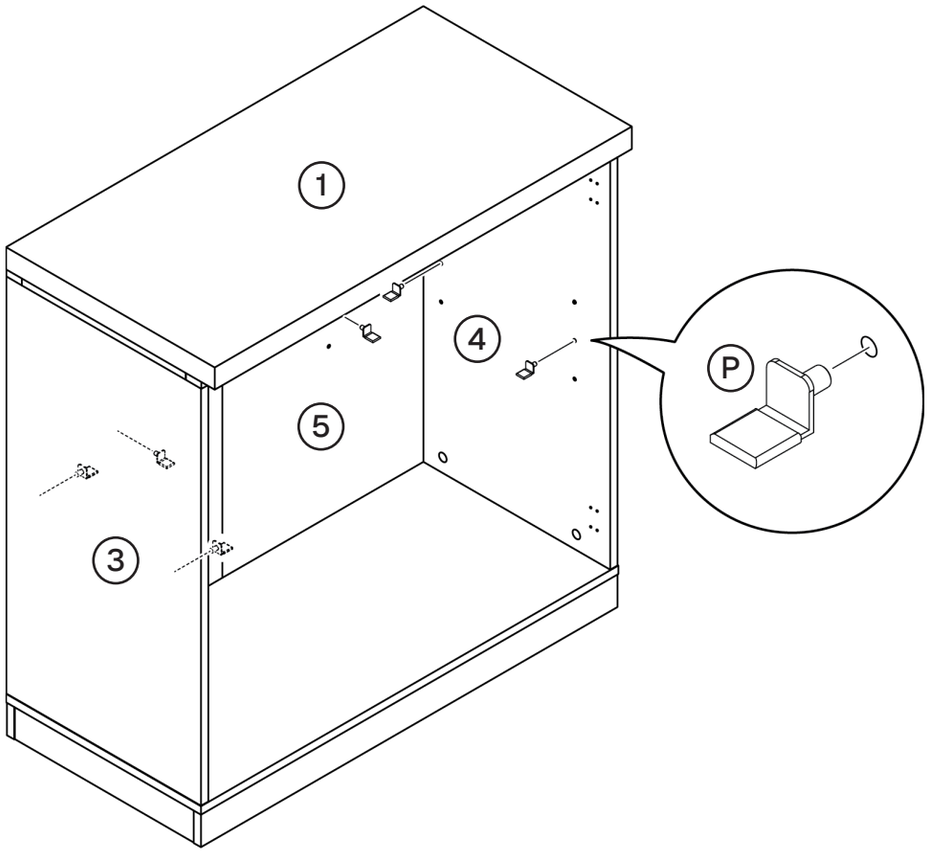

19 Putting on storage shelf panel

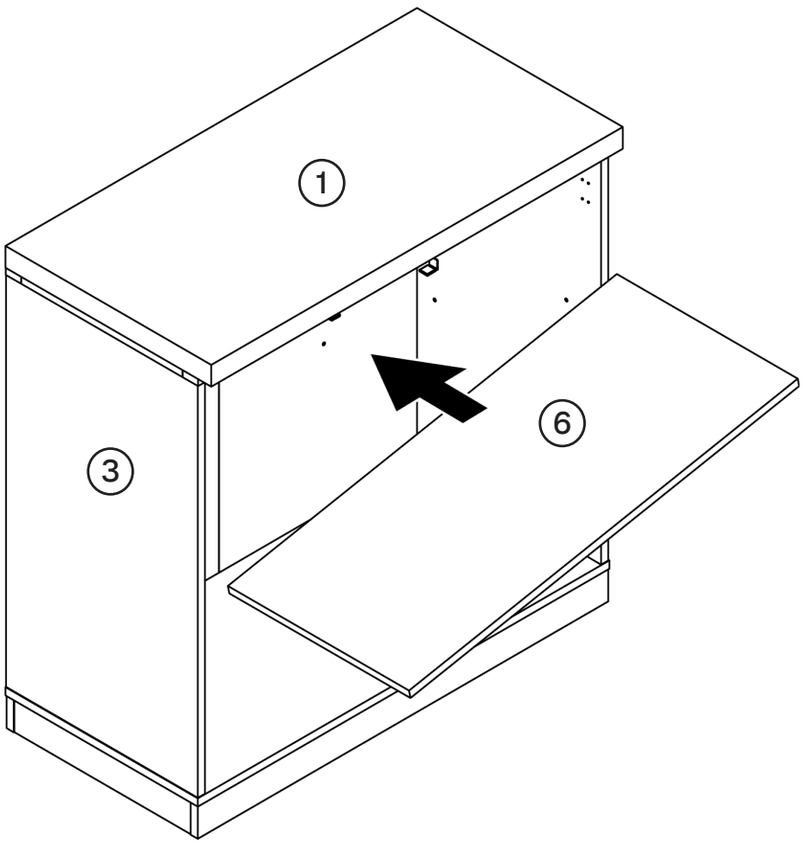

20 Attaching door hinges

H | 8x

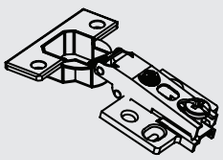

O | 4x

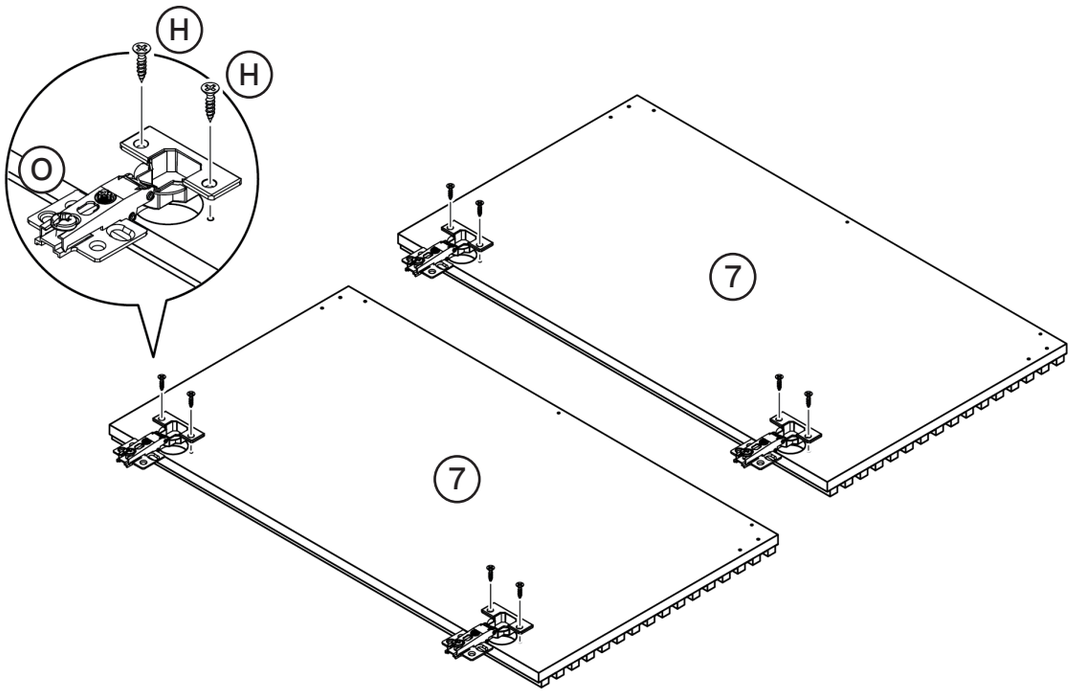

21 Attaching door handles

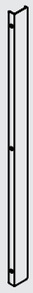

G | 2x

I | 6x

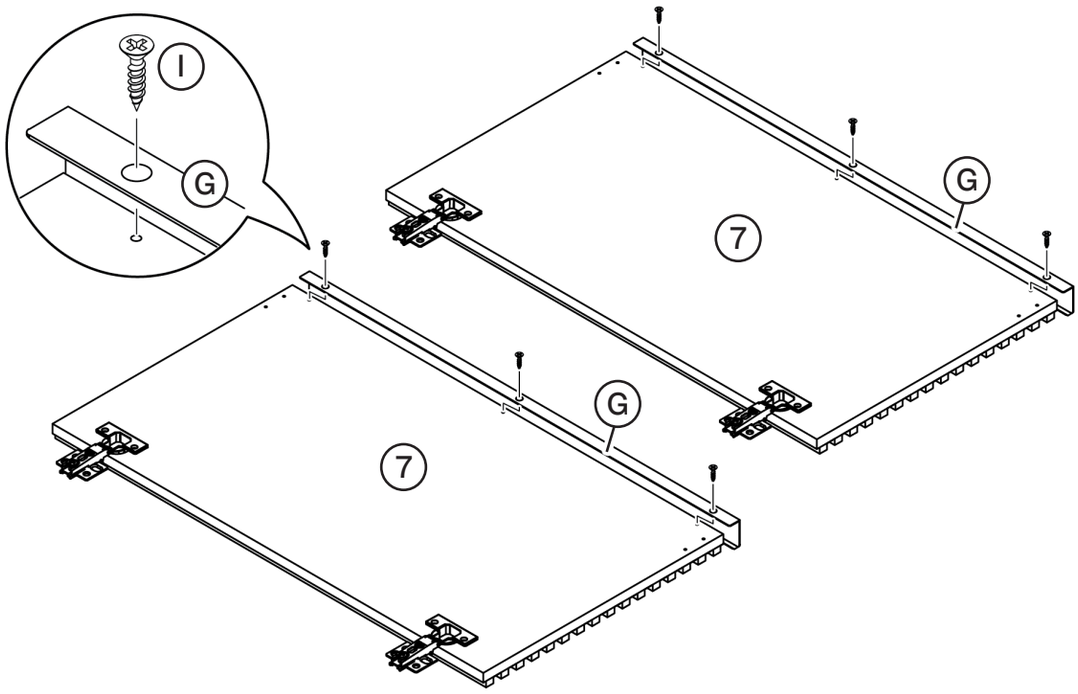

22 Attaching cabinet door

H	16x

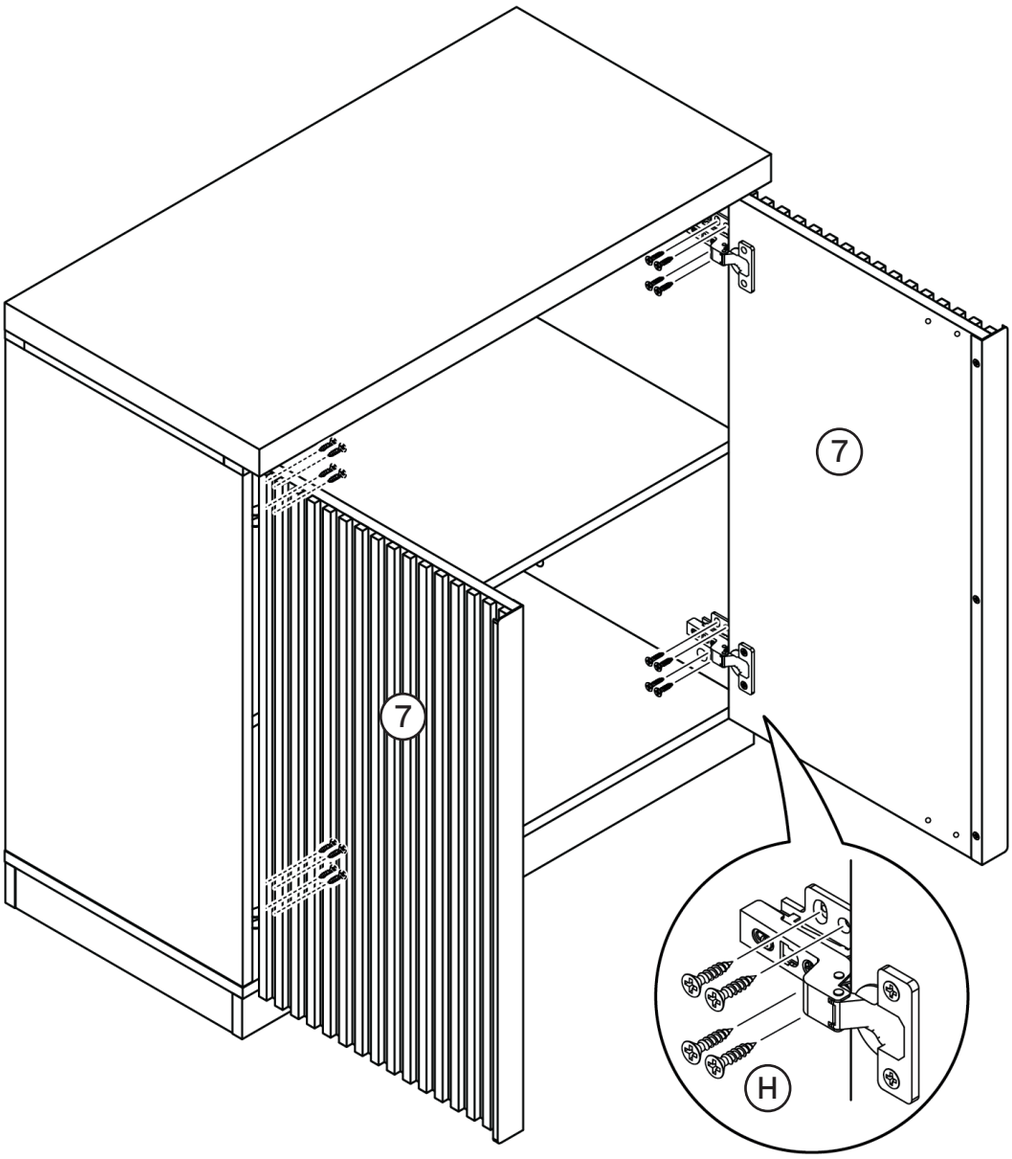

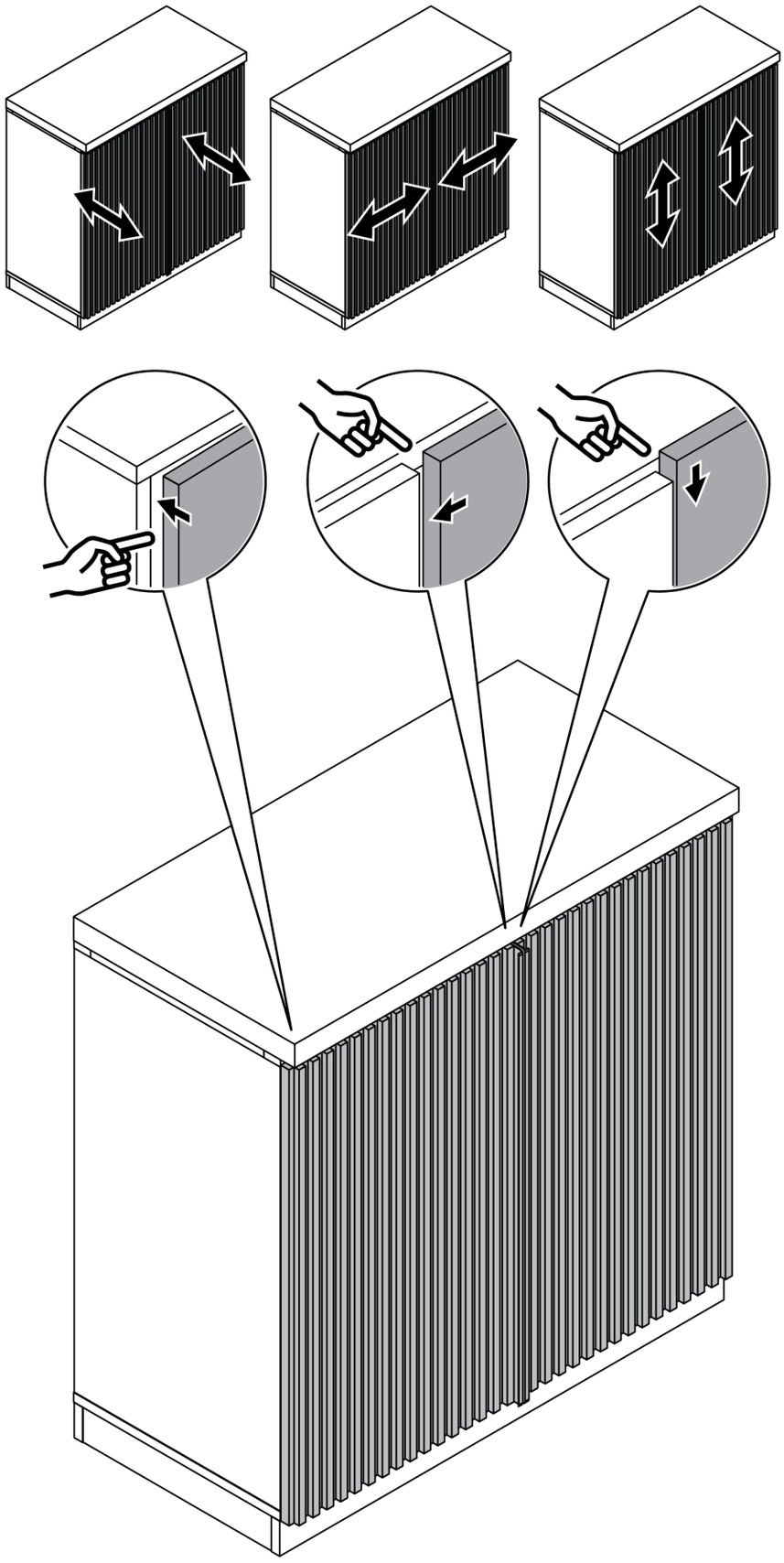

Adjust the door hinge if there is excessive gaps or height difference between the cabinet doors and/or the cabinet. Adjust both the top and bottom hinge on the same door for best result.

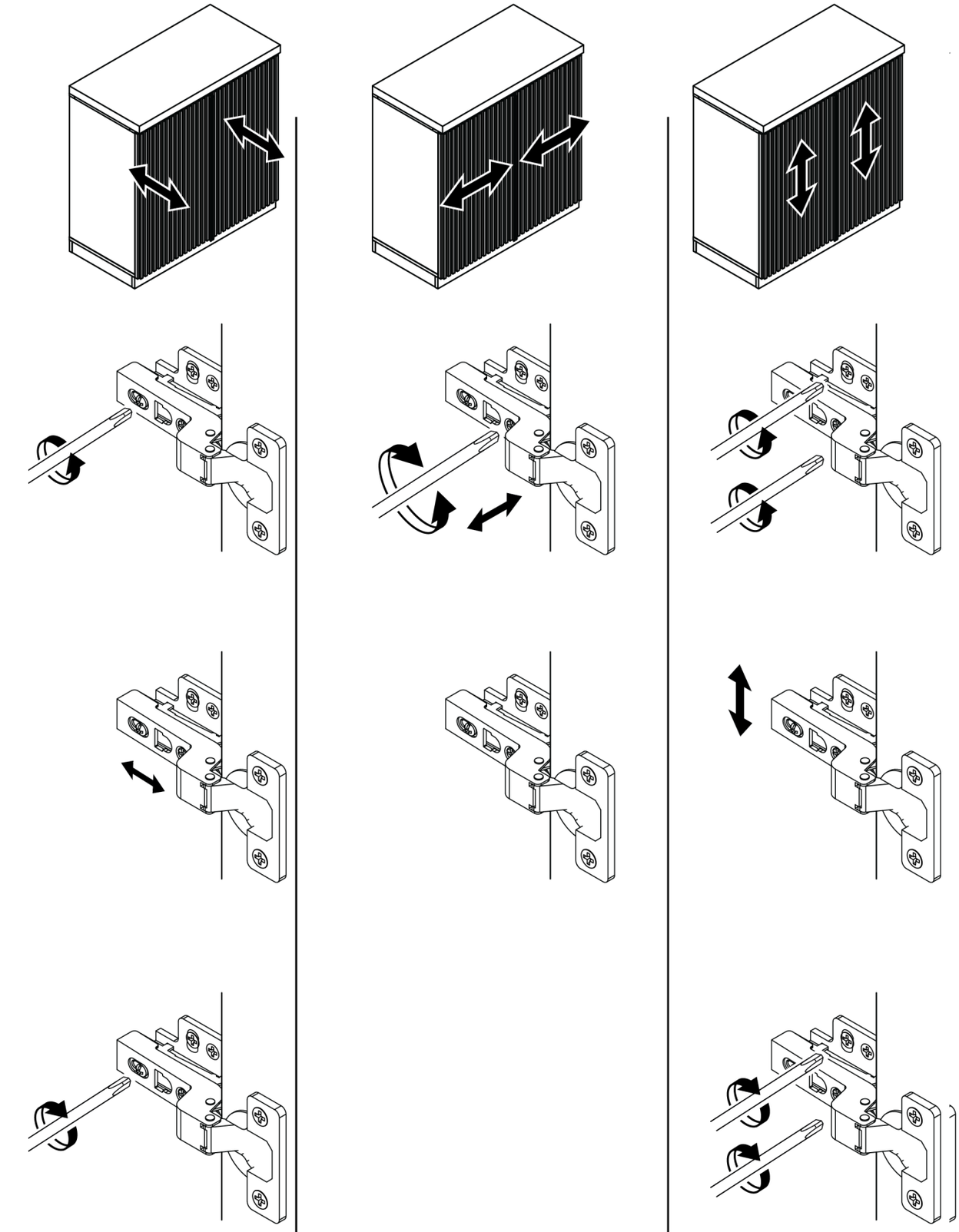

Loosen the screws on the mounting plate to adjust the door **up and down**.

Adjust the screw on the hinge to micro-adjust the door from **side to side.**

Loosen the screws on the hinge arm to adjust the door **in and out.**

23 Attaching anti-tipping straps

K | 2x

M | 2x

N | 2x

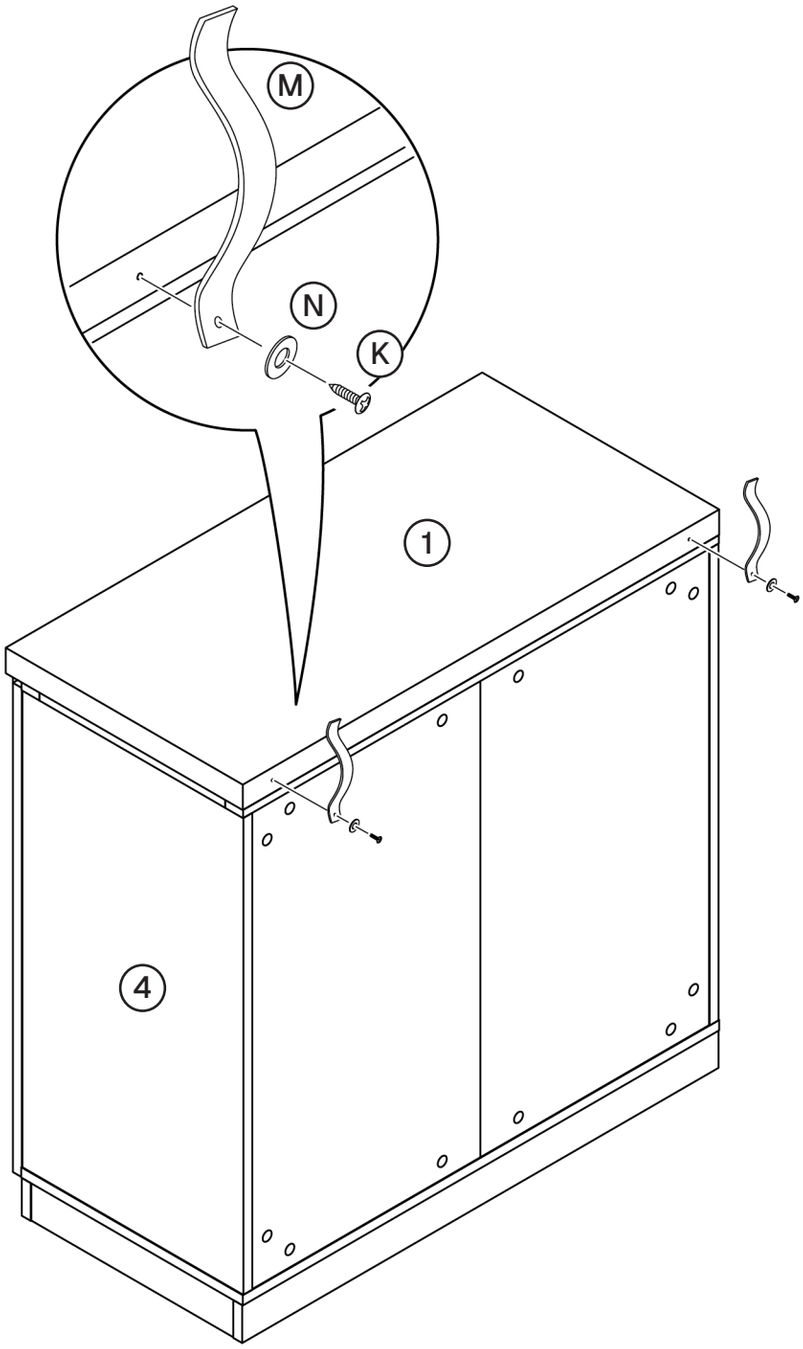

24 Affixing the stand to a wall

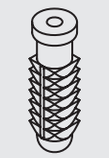

J | 2x

L | 2x

N | 2x

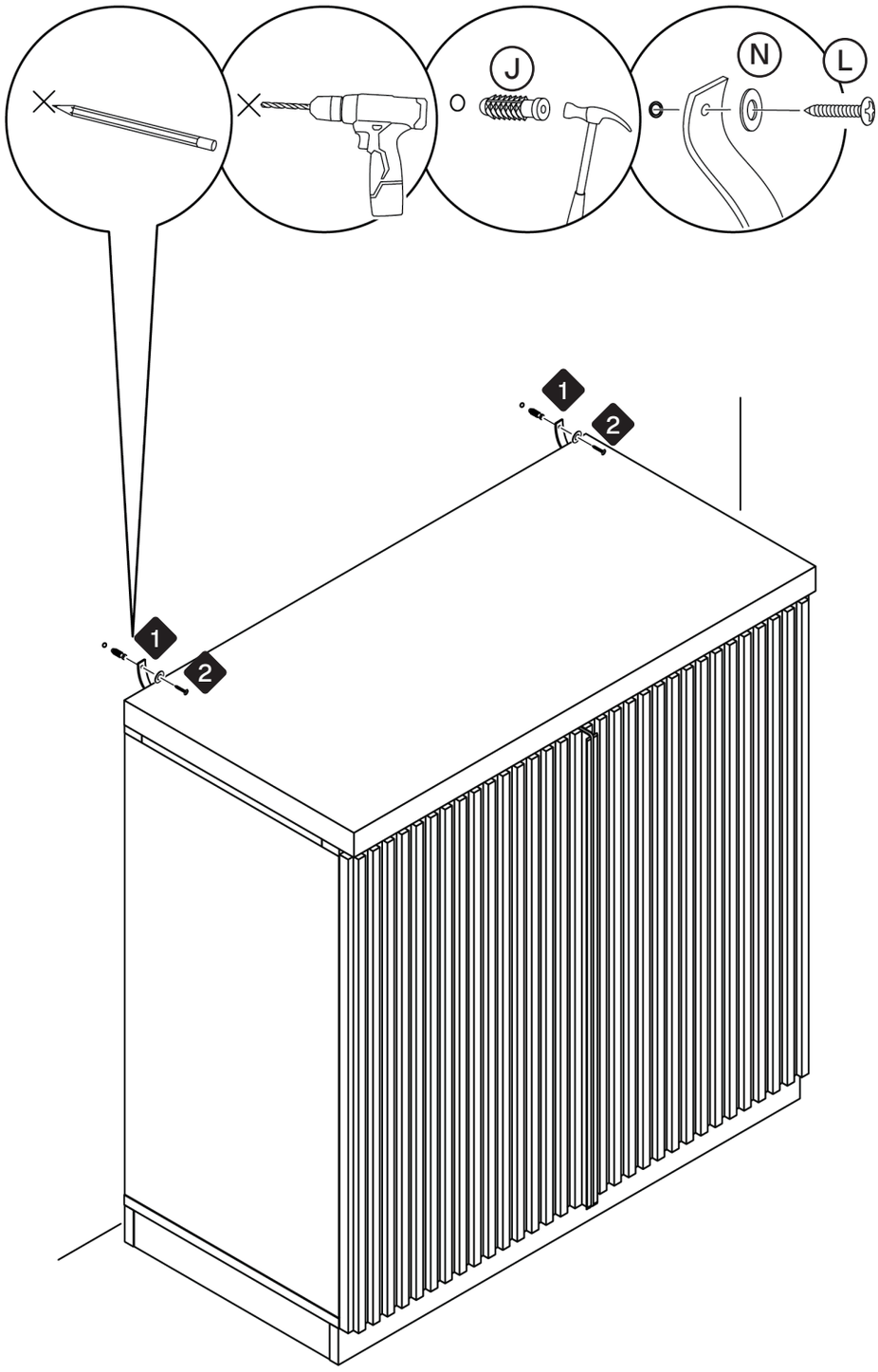

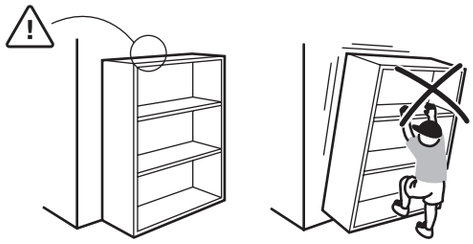

- Serious or fatal crushing injuries may occur if the furniture tip-over. Furniture must permanently affixed to the wall with anti-tipping device(s) in order to prevent the furniture from tipping over.

1. Mark the drilling positions on the wall.
2. Drill pilot holes at the marked locations.
3. Insert wall anchors into the pilot holes.
4. Secure the anti-tipping strap to the wall with provided screws.

*Assembly symbols 1 2 Follow sequential order

Care and Maintenance

Thank you for your purchase. We want your item to last as long as possible.
To ensure the product gives you years of longevity, please follow the recommendations in this care and maintenance guide.

Maintenance

- Tighten all bolts and crews again within the first 2 weeks of assembly.
- Check the tightness of all bolts every 2 months and re-tighten them if they come loose.

Cleaning

- Clean the surface of the MDF (medium density fiberboard) with a lightly dampened cloth.
- A small amount of mild soap can be used if necessary.
- Dry the surface immediately after cleaning.

Attention

DO NOT use bleach or alcohol based cleaner to clean the surface.
DO NOT apply wood treatment on parts made with MDF.

MDF will swell and distort when exposed to water damage.
Make sure to dry the furniture immediately after cleaning.

Attention

The manufacturer and seller are not responsible for any and all liability relating to personal injury, property damage or losses, whether direct, indirect, or incidental, resulting from the incorrect attachment, improper use, inadequate maintenance, unapproved modification or neglect of the product.

© All copyright of this document belongs to BELLEZE

Warranty

BELLEZE products comes with a 1-year warranty from the date of delivery.
Register your product on our website to enjoy out limited lifetime warranty!

After-Sale Service

Encounter any difficulties or missing parts?

Contact us at **1-800-682-6376** or email us at **support@belleze.com**

We will send you replacement.

Hassle free!
No need to worry about repackaging and sending your item back.

Contact Us

support@belleze.com

1-800-682-6376